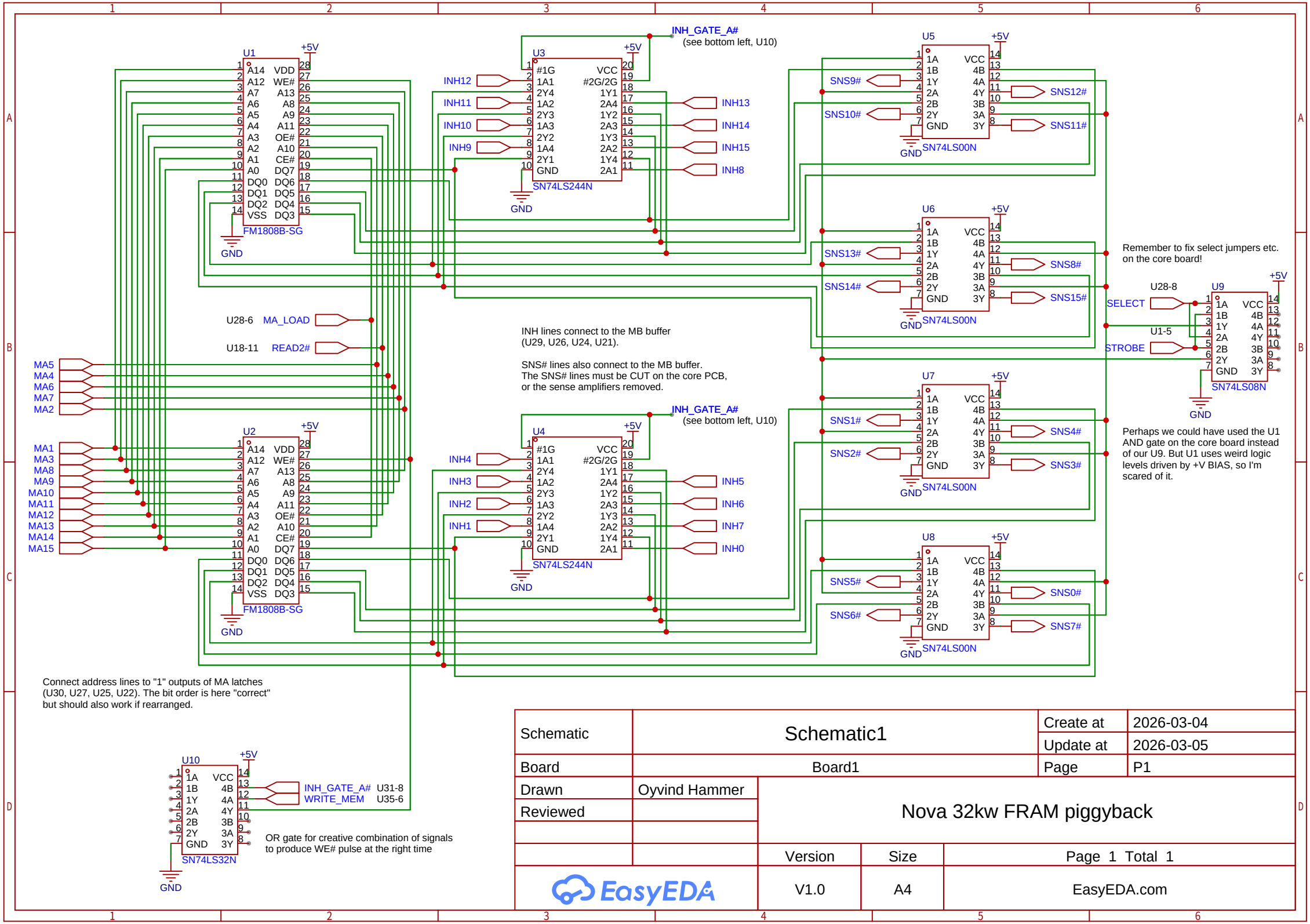

Schematic	Schematic1	Create at	2026-03-04
		Update at	2026-03-05
Board	Board1	Page	P1
Drawn	Oyvind Hammer	Nova 32kw FRAM piggyback	
Reviewed			
		Version	Size	Page 1 Total 1
EasyEDA		V1.0	A4	EasyEDA.com