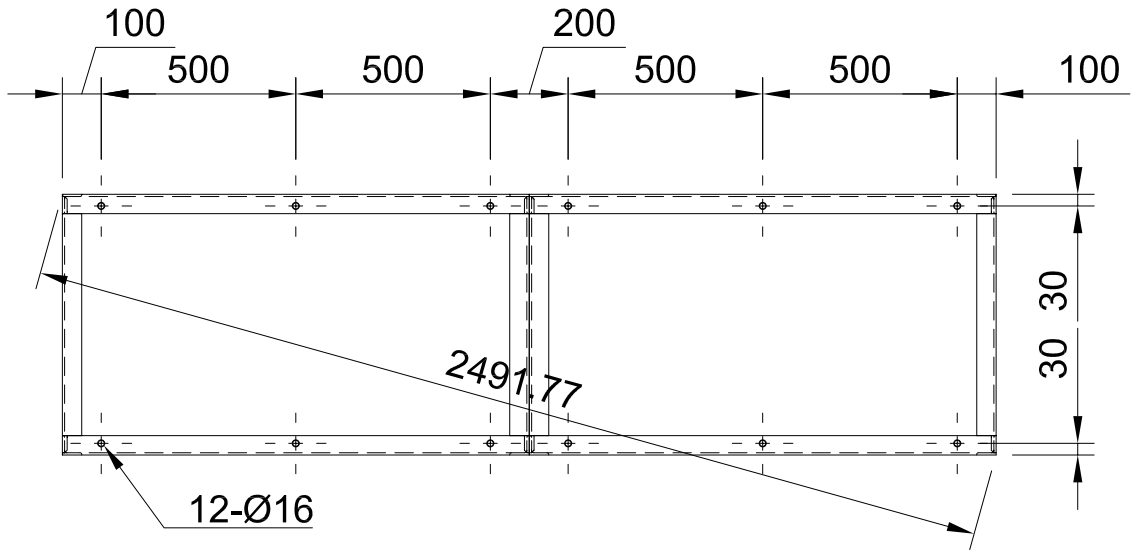

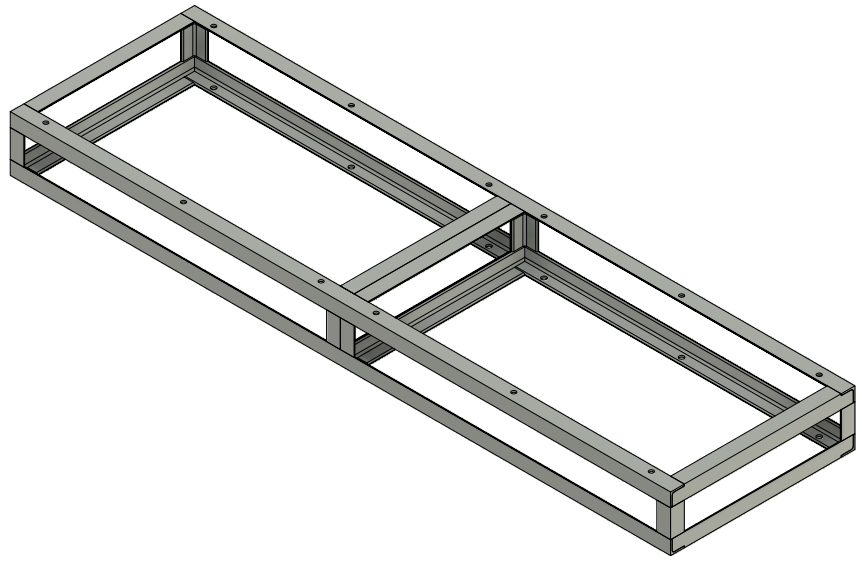

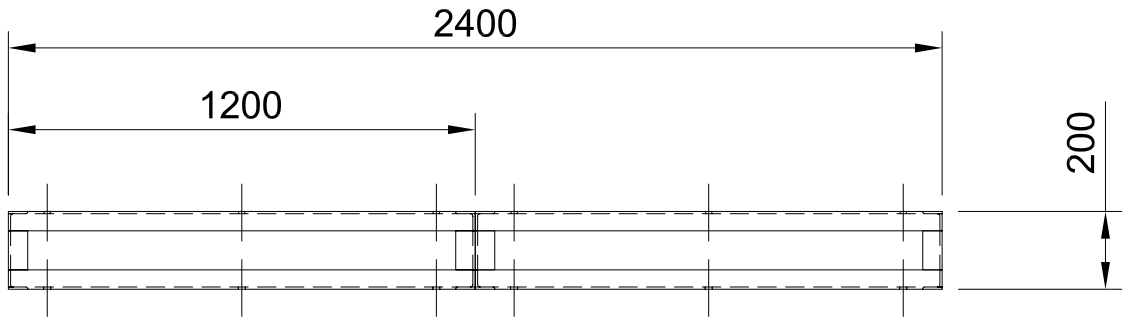

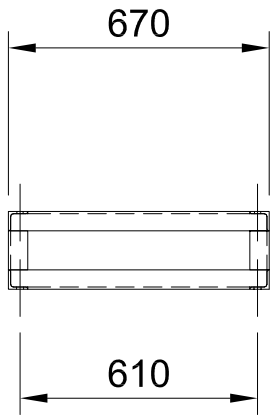

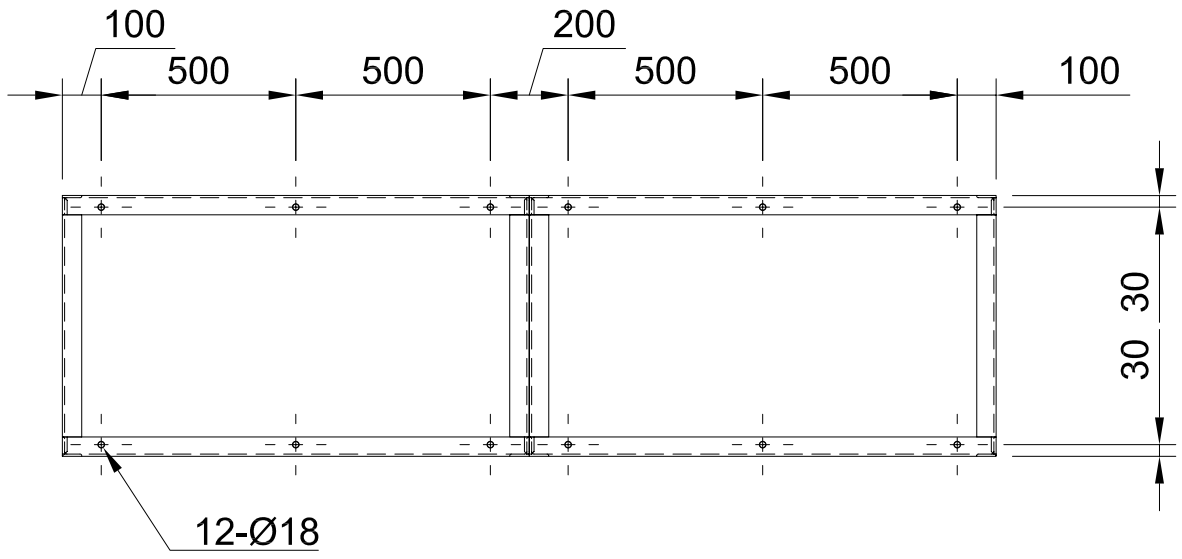

Dept.	Technical reference	Created by HIROYUKI OHIRA 2025/08/01	Approved by
製作数:1体 材料:SS400 L 50×50×6		Document type	Document status
		Title 分電盤架台 組立図	DWG No.
			Rev. / Date of issue / Sheet 1/1