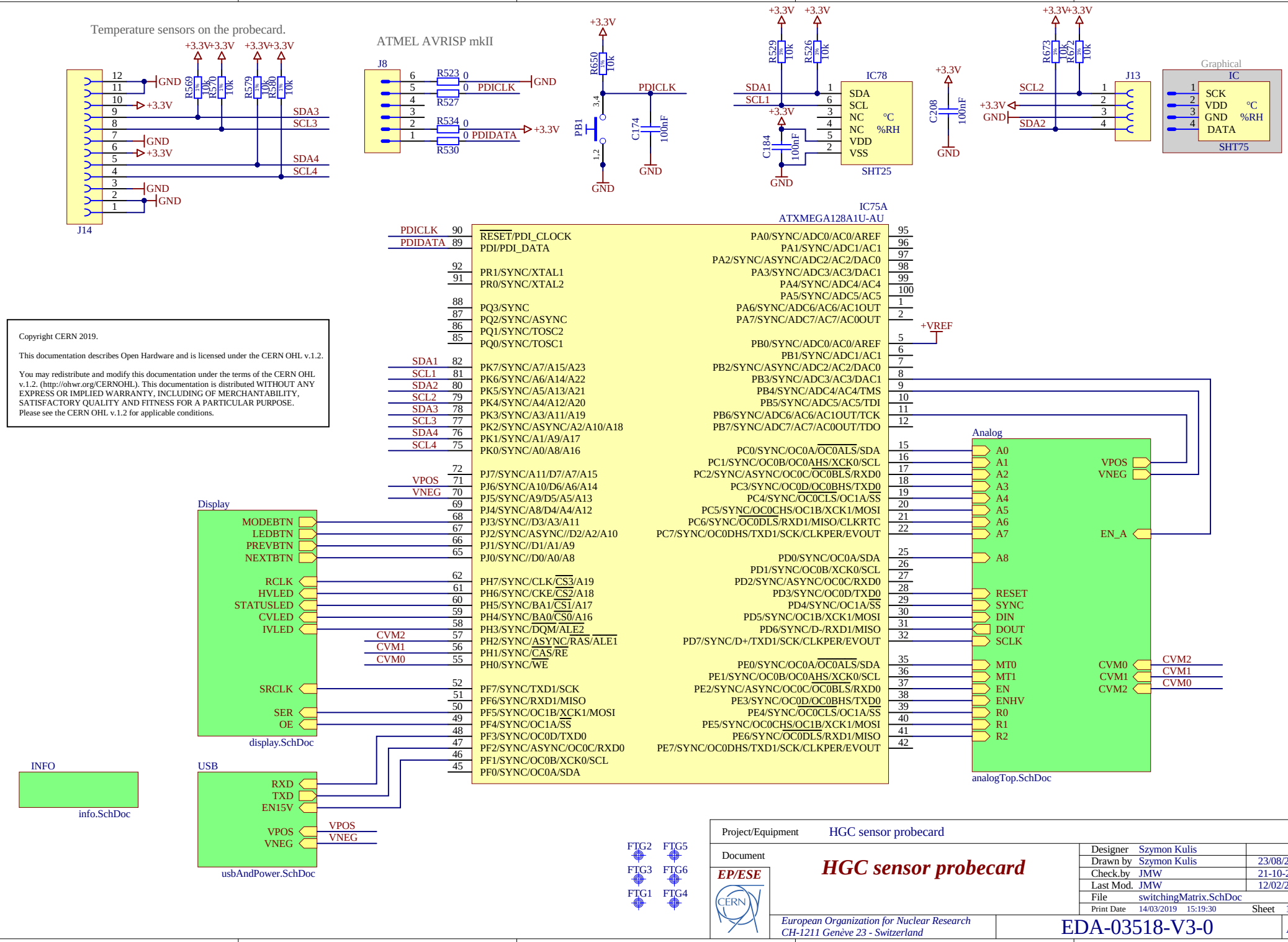

Copyright CERN 2019.

This documentation describes Open Hardware and is licensed under the CERN OHL v.1.2.

You may redistribute and modify this documentation under the terms of the CERN OHL v.1.2. (http://ohwr.org/CERNOHL). This documentation is distributed WITHOUT ANY EXPRESS OR IMPLIED WARRANTY, INCLUDING OF MERCHANTABILITY, SATISFACTORY QUALITY AND FITNESS FOR A PARTICULAR PURPOSE. Please see the CERN OHL v.1.2 for applicable conditions.

Project/Equipment: HGC sensor probecard

Document: **HGC sensor probecard**

EP/ESE

European Organization for Nuclear Research
CH-1211 Genève 23 - Switzerland

Designer	Szymon Kulis	
Drawn by	Szymon Kulis	23/08/2016
Check.by	JMW	21-10-2016
Last Mod.	JMW	12/02/2019
File	switchingMatrix.SchDoc	
Print Date	14/03/2019 15:19:30	Sheet 1 of 79

EDA-03518-V3-0

Size A4 | Rev -

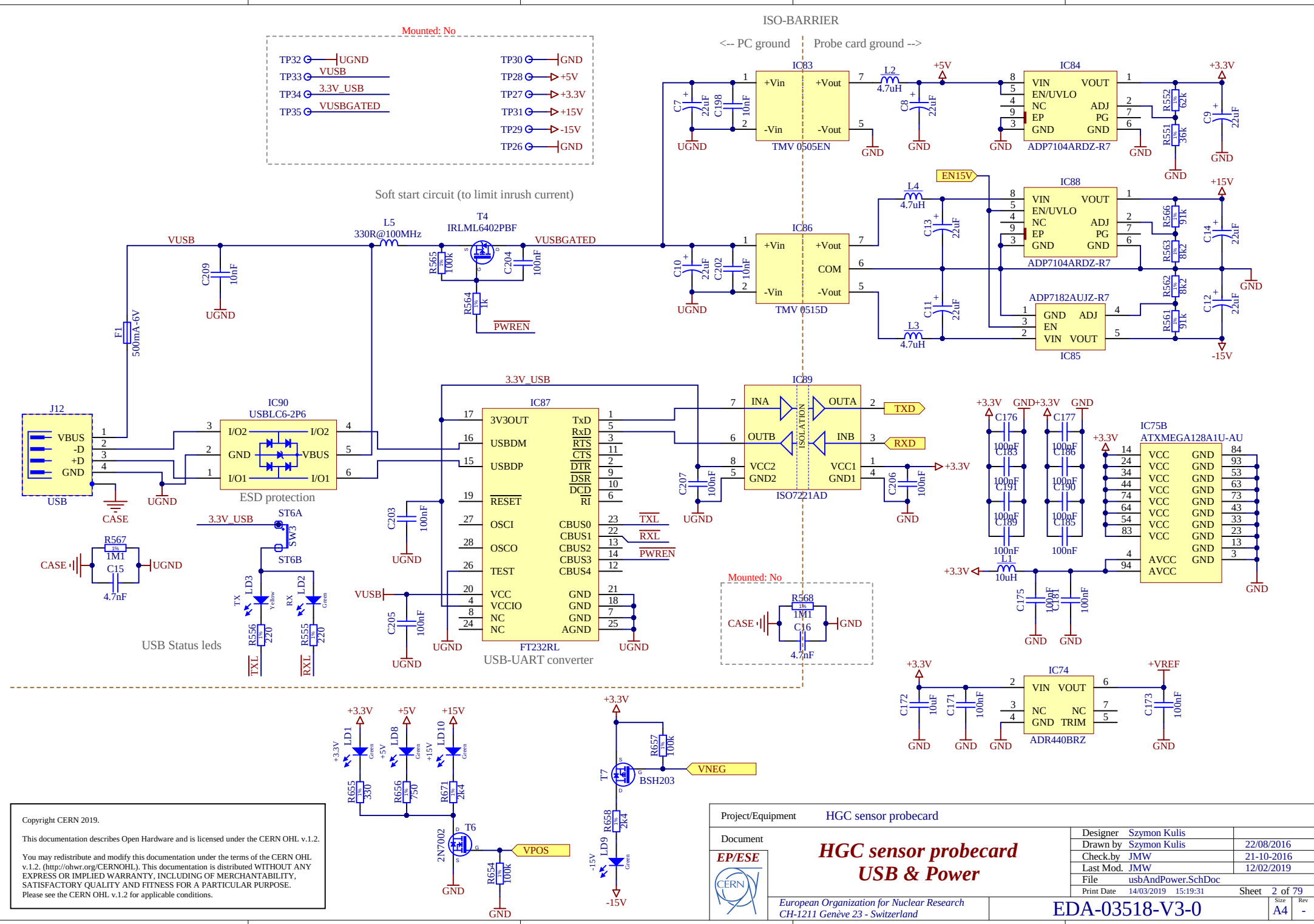
ISO-BARRIER
<-- PC ground
Probe card ground -->
Mounted: No
TP32 UGND
TP33 VUSB
TP34 3.3V_USB
TP35 VUSBGATED
TP30 GND
TP28 +5V
TP27 +3.3V
TP31 +15V
TP29 -15V
TP26 GND
Soft start circuit (to limit inrush current)
IC83
TMV 0505EN
IC84
ADP7104ARDZ-R7
IC86
TMV 0515D
IC88
ADP7104ARDZ-R7
IC85
ADP7182AUJZ-R7
EN15V
L2 4.7uH
L4 4.7uH
L3 4.7uH
L5 330R@100MHz
T4 IRLML6402PBF
VUSB
VUSBGATED
F1 500mA-6V
PWREN
J12
USB
IC90 USBLC6-2P6
ESD protection
CASE
3.3V_USB
ST6A
ST6B
SW3
IC87
FT232RL
USB-UART converter
IC89
ISO7221AD
TXD
RXD
TXL
RXL
PWREN
IC75B
ATXMEGA128A1U-AU
L1 10uH
Mounted: No
R568 1M1
C16 4.7nF
USB Status leds
LD1
LD8
LD10
LD9
T7 BSH203
VNEG
T6 2N7002
VPOS
IC74
ADR440BRZ
+VREF
Copyright CERN 2019.
This documentation describes Open Hardware and is licensed under the CERN OHL v.1.2.
You may redistribute and modify this documentation under the terms of the CERN OHL v.1.2. (http://ohwr.org/CERNOHL). This documentation is distributed WITHOUT ANY EXPRESS OR IMPLIED WARRANTY, INCLUDING OF MERCHANTABILITY, SATISFACTORY QUALITY AND FITNESS FOR A PARTICULAR PURPOSE. Please see the CERN OHL v.1.2 for applicable conditions.
Project/Equipment HGC sensor probecard
Document
EP/ESE
HGC sensor probecard
USB & Power
European Organization for Nuclear Research
CH-1211 Genève 23 - Switzerland
Designer Szymon Kulis
Drawn by Szymon Kulis 22/08/2016
Check.by JMW 21-10-2016
Last Mod. JMW 12/02/2019
File usbAndPower.SchDoc
Print Date 14/03/2019 15:19:31
Sheet 2 of 79
EDA-03518-V3-0
Size A4
Rev -

All TP.. Not Mounted

M
group512chn.SchDoc

Measurement type select (IV or CV)

CM currentMeter.SchDoc

IC77 MAX328EWE+

IC76 MAX328EWE+

Optional resistor if bias resistors are not populated in each channel

Current measurement terminals

Mounted: No

Capacitance measurement terminals

Mounted: No

Maximum leakage current (Vgs=0V, Vds=1kV) : 100uA
We may have to remove it if it spoils measurement.

Mounted: No

HV sensor bias terminals

Mounted: No

J23

Leakage estimation(@room temperature): 80pA
1) swMatrix: 70pA
2) Drain of MAX328: 10pA

As all terminals of all switches are always very close to ground level, the leakage current should be fairly constant and therefore it should be possible to calibrate for it.

Capacitance estimation: 50pF
1) swMatrix: 40pF
2) Channel of MAX328: 10pF@1MHz (see group8chn.sch)

As all terminals of all switches are always very close to ground level, the capacitances of the switches should be fairly constant and therefore it should be possible to calibrate for it.

Copyright CERN 2019.

This documentation describes Open Hardware and is licensed under the CERN OHL v.1.2.

You may redistribute and modify this documentation under the terms of the CERN OHL v.1.2. (http://ohwr.org/CERNOHL). This documentation is distributed WITHOUT ANY EXPRESS OR IMPLIED WARRANTY, INCLUDING OF MERCHANTABILITY, SATISFACTORY QUALITY AND FITNESS FOR A PARTICULAR PURPOSE.
Please see the CERN OHL v.1.2 for applicable conditions.

Project/Equipment: HGC sensor probecard

Document: **HGC sensor probecard Analog Top**

EP/ESE

European Organization for Nuclear Research
CH-1211 Genève 23 - Switzerland

Designer	Szymon Kulis	
Drawn by	Szymon Kulis	23/08/2016
Check.by	JMW	21-10-2016
Last Mod.	JMW	12/02/2019
File	analogTop.SchDoc	
Print Date	14/03/2019 15:19:32	Sheet 3 of 79

EDA-03518-V3-0

Size A4 | Rev -

Mounted: No

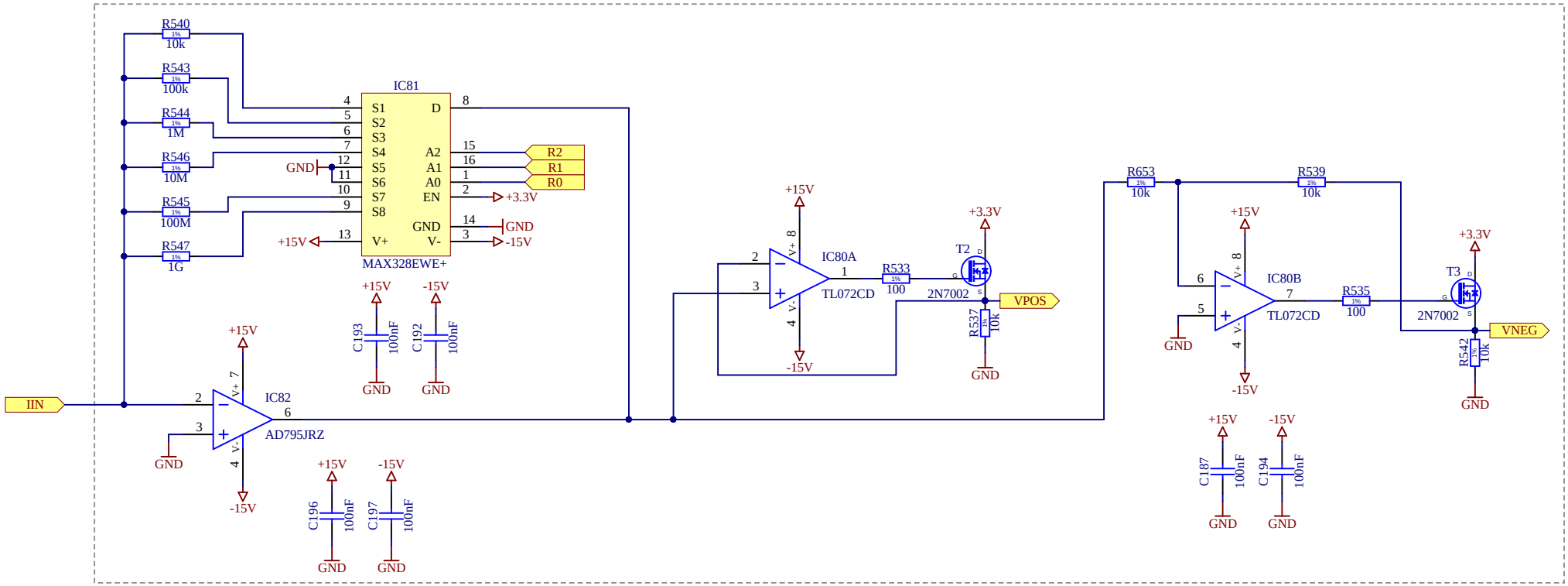

Current to voltage converter. Full scale ranges:
1) 1mA (absolute error < 1uA or 1%)
2) 100uA (absolute error < 100nA or 1%)
3) 10uA (absolute error < 10nA or 1%)
4) 1uA (absolute error < 1nA or 1%)
5) 100nA (absolute error < 100p or 1%)
6) 10nA (absolute error < 10pA or 1%)

Copyright CERN 2019.

This documentation describes Open Hardware and is licensed under the CERN OHL v.1.2.

You may redistribute and modify this documentation under the terms of the CERN OHL v.1.2. (http://ohwr.org/CERNOHL). This documentation is distributed WITHOUT ANY EXPRESS OR IMPLIED WARRANTY, INCLUDING OF MERCHANTABILITY, SATISFACTORY QUALITY AND FITNESS FOR A PARTICULAR PURPOSE.
Please see the CERN OHL v.1.2 for applicable conditions.

Project/Equipment	HGC sensor probecard		
Document	**HGC sensor probecard Current meter**	Designer	Szymon Kulis
		Drawn by	Szymon Kulis 24/08/2016
		Check.by	JMW 21-10-2016
		Last Mod.	JMW 12/02/2019
		File	currentMeter.SchDoc
		Print Date	14/03/2019 15:19:33 Sheet 4 of 79
EP/ESE	*European Organization for Nuclear Research CH-1211 Genève 23 - Switzerland*	EDA-03518-V3-0	Size A4 Rev -

Copyright CERN 2019.

This documentation describes Open Hardware and is licensed under the CERN OHL v.1.2.

You may redistribute and modify this documentation under the terms of the CERN OHL v.1.2. (http://ohwr.org/CERNOHL). This documentation is distributed WITHOUT ANY EXPRESS OR IMPLIED WARRANTY, INCLUDING OF MERCHANTABILITY, SATISFACTORY QUALITY AND FITNESS FOR A PARTICULAR PURPOSE.
Please see the CERN OHL v.1.2 for applicable conditions.

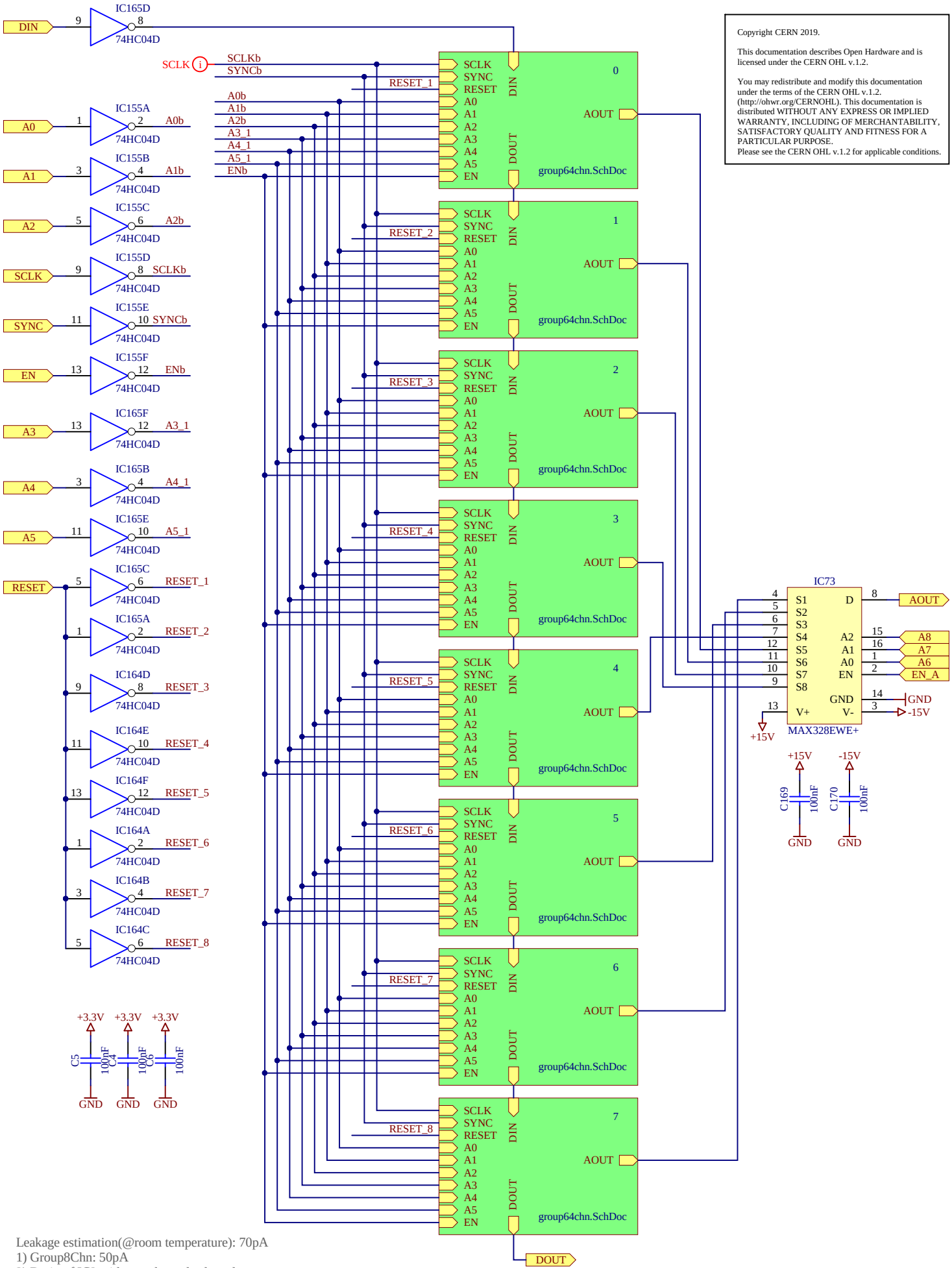

Leakage estimation(@room temperature): 70pA
1) Group8Chn: 50pA
2) Drain of IC2 with one channel selected
- max 10pA (page 2, MAX328 datasheet)
- typ 3pA (page 2, MAX328 datasheet)

Capacitance estimation: 40pF
1) Group8chn: 20pF
2) 2xChannel of MAX328: 10pF@1MHz (see group8chn.sch)

Project/Equipment	HGC sensor probecard
Document	**HGC sensor probecard Switching Matrix**
Designer	Szymon Kulis
Drawn by	Szymon Kulis 24/08/2016
Check.by	JMW 21-10-2016
Last Mod.	JMW 12/02/2019
File	group512chn.SchDoc
Print Date	14/03/2019 15:19:34
Sheet	5 of 79
	European Organization for Nuclear Research CH-1211 Genève 23 - Switzerland
	EDA-03518-V3-0
Size	A4
Rev	-

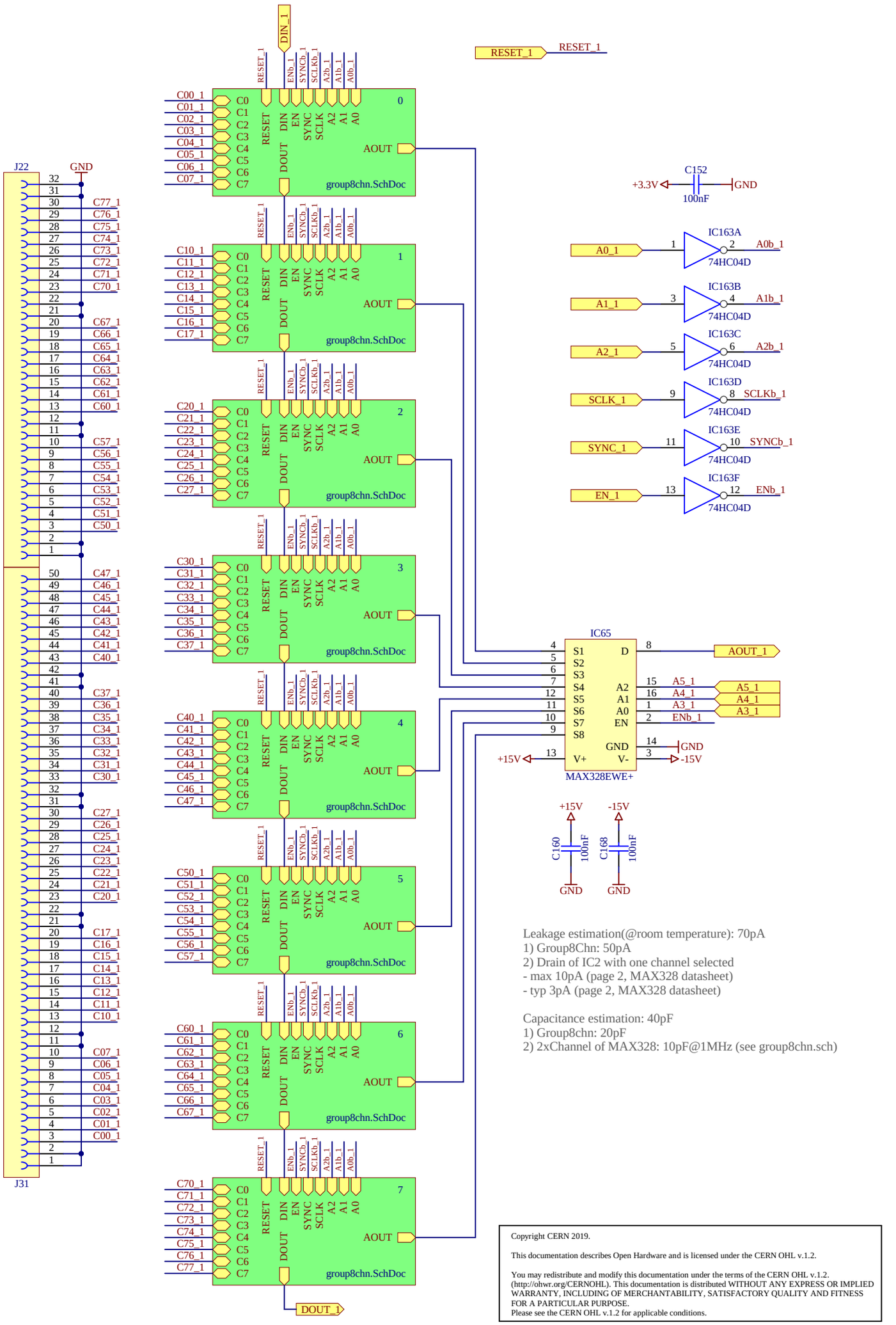

Leakage estimation(@room temperature): 70pA
1) Group8Chn: 50pA
2) Drain of IC2 with one channel selected
- max 10pA (page 2, MAX328 datasheet)
- typ 3pA (page 2, MAX328 datasheet)

Capacitance estimation: 40pF
1) Group8chn: 20pF
2) 2xChannel of MAX328: 10pF@1MHz (see group8chn.sch)

Copyright CERN 2019.

This documentation describes Open Hardware and is licensed under the CERN OHL v.1.2.

You may redistribute and modify this documentation under the terms of the CERN OHL v.1.2. (http://ohwr.org/CERNOHL). This documentation is distributed WITHOUT ANY EXPRESS OR IMPLIED WARRANTY, INCLUDING OF MERCHANTABILITY, SATISFACTORY QUALITY AND FITNESS FOR A PARTICULAR PURPOSE.
Please see the CERN OHL v.1.2 for applicable conditions.

Project/Equipment	HGC sensor probecard		
Document	**HGC sensor probecard Switching Matrix**	Designer	Szymon Kulis
		Drawn by	Szymon Kulis 24/08/2016
		Check.by	JMW 21-10-2016
		Last Mod.	JMW 12/02/2019
		File	group64chn.SchDoc
		Print Date	14/03/2019 15:19:35 Sheet 6.1of 79
EP/ESE	*European Organization for Nuclear Research CH-1211 Genève 23 - Switzerland*	EDA-03518-V3-0	Size A4 Rev -

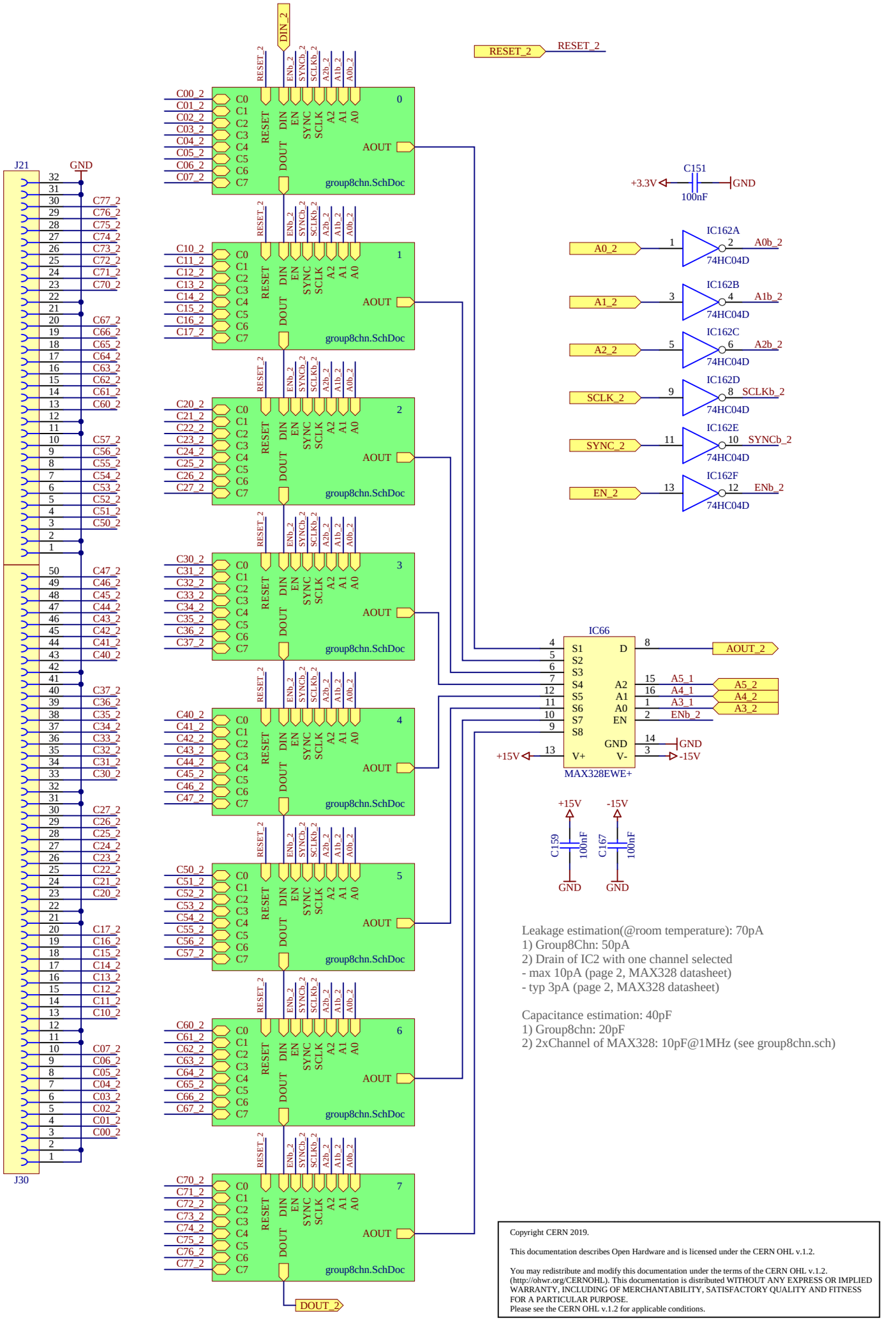

Copyright CERN 2019.

This documentation describes Open Hardware and is licensed under the CERN OHL v.1.2.

You may redistribute and modify this documentation under the terms of the CERN OHL v.1.2. (http://ohwr.org/CERNOHL). This documentation is distributed WITHOUT ANY EXPRESS OR IMPLIED WARRANTY, INCLUDING OF MERCHANTABILITY, SATISFACTORY QUALITY AND FITNESS FOR A PARTICULAR PURPOSE.
Please see the CERN OHL v.1.2 for applicable conditions.

Project/Equipment	HGC sensor probecard		
Document	**HGC sensor probecard Switching Matrix**	Designer	Szymon Kulis
		Drawn by	Szymon Kulis 24/08/2016
		Check.by	JMW 21-10-2016
		Last Mod.	JMW 12/02/2019
		File	group64chn.SchDoc
		Print Date	14/03/2019 15:19:35 Sheet 6.2of 79
EP/ESE	*European Organization for Nuclear Research CH-1211 Genève 23 - Switzerland*	EDA-03518-V3-0	Size A4 Rev -

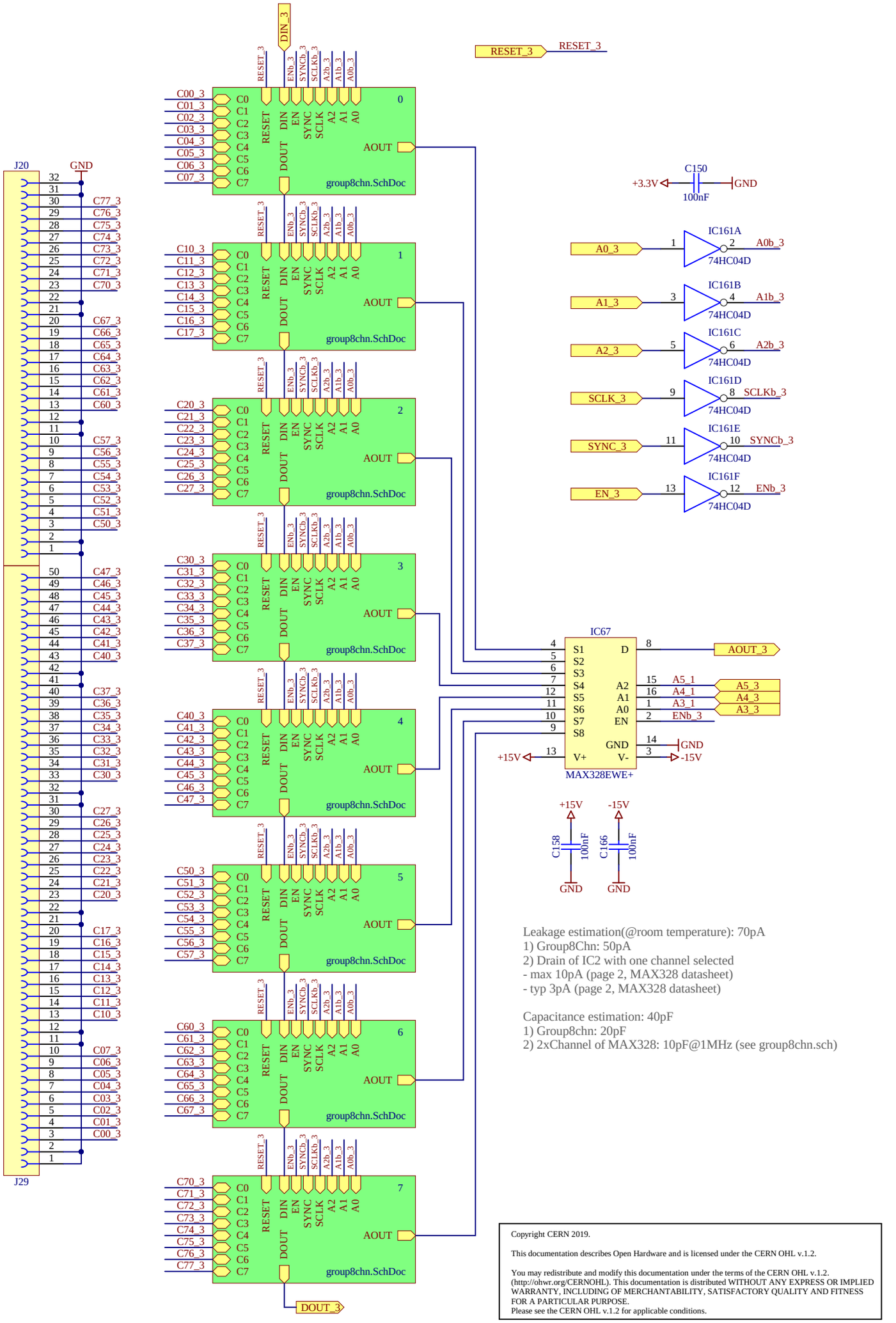

Copyright CERN 2019.

This documentation describes Open Hardware and is licensed under the CERN OHL v.1.2.

You may redistribute and modify this documentation under the terms of the CERN OHL v.1.2. (http://ohwr.org/CERNOHL). This documentation is distributed WITHOUT ANY EXPRESS OR IMPLIED WARRANTY, INCLUDING OF MERCHANTABILITY, SATISFACTORY QUALITY AND FITNESS FOR A PARTICULAR PURPOSE.
Please see the CERN OHL v.1.2 for applicable conditions.

Project/Equipment	HGC sensor probecard		
Document	**HGC sensor probecard Switching Matrix**	Designer	Szymon Kulis
		Drawn by	Szymon Kulis 24/08/2016
		Check.by	JMW 21-10-2016
		Last Mod.	JMW 12/02/2019
		File	group64chn.SchDoc
		Print Date	14/03/2019 15:19:36
		Sheet	6.3of 79
EP/ESE	*European Organization for Nuclear Research CH-1211 Genève 23 - Switzerland*	EDA-03518-V3-0	Size A4 Rev -

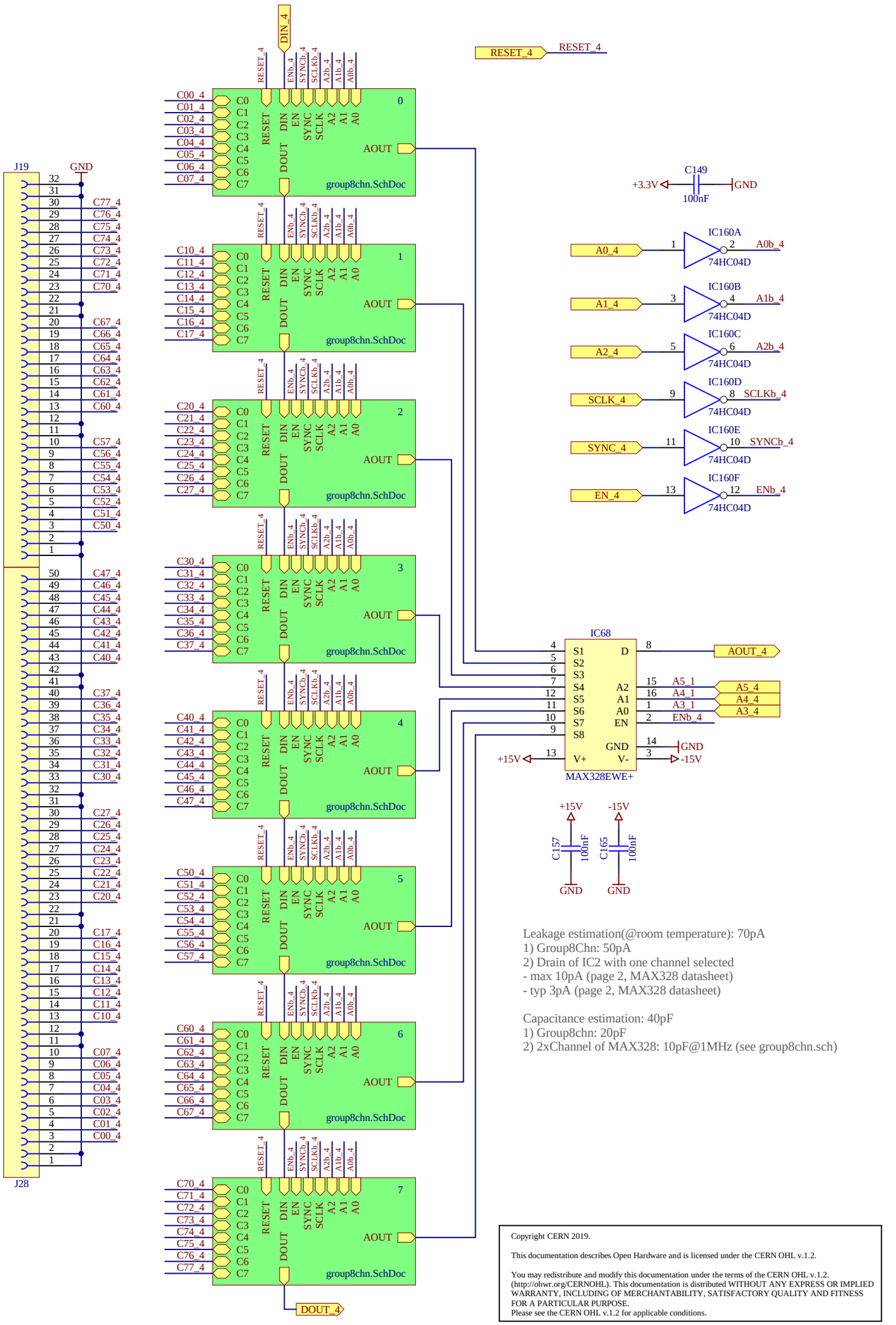

Leakage estimation(@room temperature): 70pA
1) Group8Chn: 50pA
2) Drain of IC2 with one channel selected
- max 10pA (page 2, MAX328 datasheet)
- typ 3pA (page 2, MAX328 datasheet)

Capacitance estimation: 40pF
1) Group8chn: 20pF
2) 2xChannel of MAX328: 10pF@1MHz (see group8chn.sch)

Copyright CERN 2019.

This documentation describes Open Hardware and is licensed under the CERN OHL v.1.2.

You may redistribute and modify this documentation under the terms of the CERN OHL v.1.2. (http://ohwr.org/CERNOHL). This documentation is distributed WITHOUT ANY EXPRESS OR IMPLIED WARRANTY, INCLUDING OF MERCHANTABILITY, SATISFACTORY QUALITY AND FITNESS FOR A PARTICULAR PURPOSE.
Please see the CERN OHL v.1.2 for applicable conditions.

Project/Equipment	HGC sensor probecard		
Document	**HGC sensor probecard Switching Matrix**	Designer	Szymon Kulis
		Drawn by	Szymon Kulis 24/08/2016
		Check.by	JMW 21-10-2016
		Last Mod.	JMW 12/02/2019
		File	group64chn.SchDoc
		Print Date	14/03/2019 15:19:36
		Sheet	6.4of 79
EP/ESE	*European Organization for Nuclear Research CH-1211 Genève 23 - Switzerland*	EDA-03518-V3-0	Size A4 Rev -

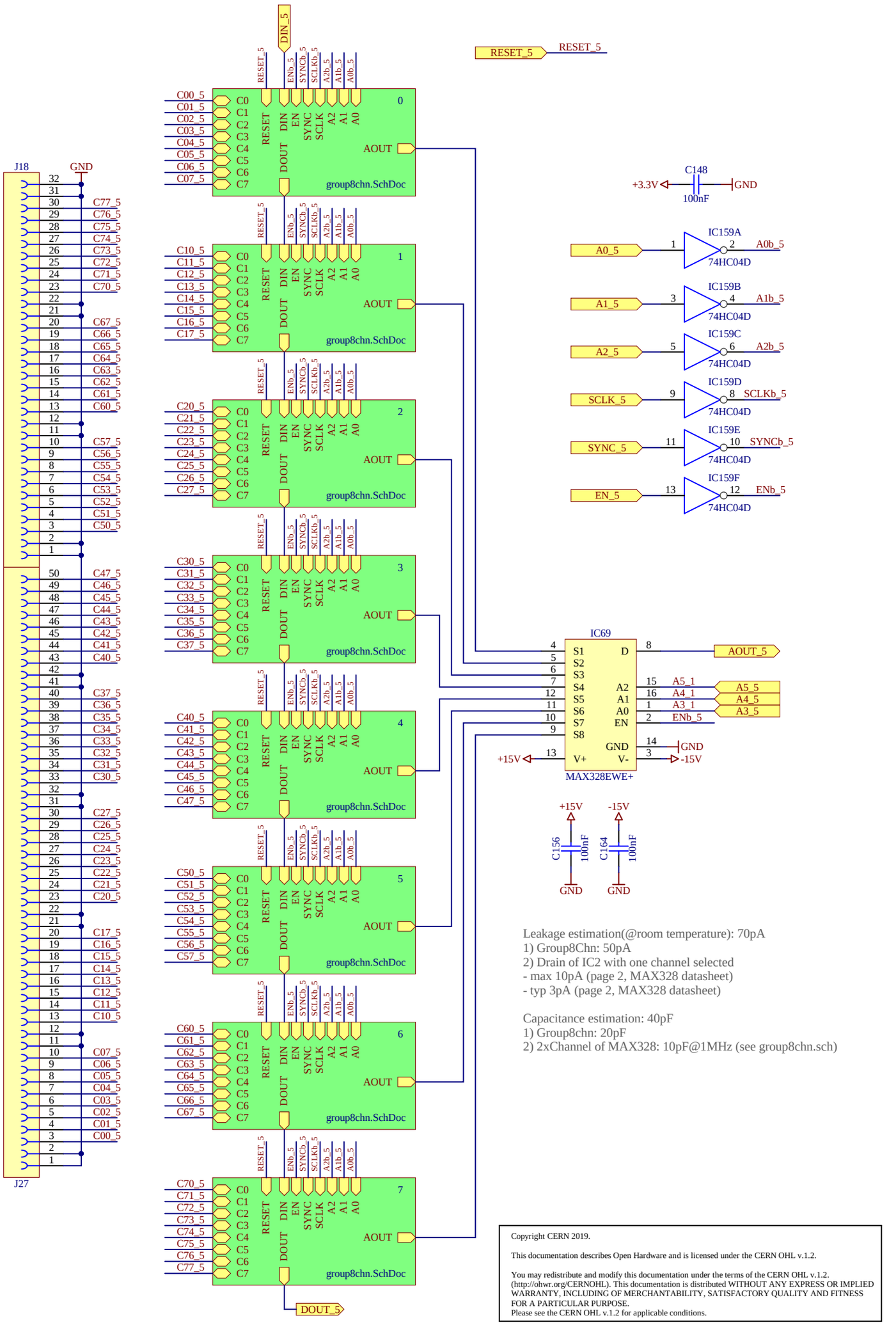

Copyright CERN 2019.

This documentation describes Open Hardware and is licensed under the CERN OHL v.1.2.

You may redistribute and modify this documentation under the terms of the CERN OHL v.1.2. (http://ohwr.org/CERNOHL). This documentation is distributed WITHOUT ANY EXPRESS OR IMPLIED WARRANTY, INCLUDING OF MERCHANTABILITY, SATISFACTORY QUALITY AND FITNESS FOR A PARTICULAR PURPOSE.
Please see the CERN OHL v.1.2 for applicable conditions.

Project/Equipment	HGC sensor probecard		
Document	**HGC sensor probecard Switching Matrix**	Designer	Szymon Kulis
EP/ESE		Drawn by	Szymon Kulis 24/08/2016
		Check.by	JMW 21-10-2016
		Last Mod.	JMW 12/02/2019
		File	group64chn.SchDoc
		Print Date	14/03/2019 15:19:36 Sheet 6.5of 79
European Organization for Nuclear Research CH-1211 Genève 23 - Switzerland	EDA-03518-V3-0	Size	A4
		Rev	-

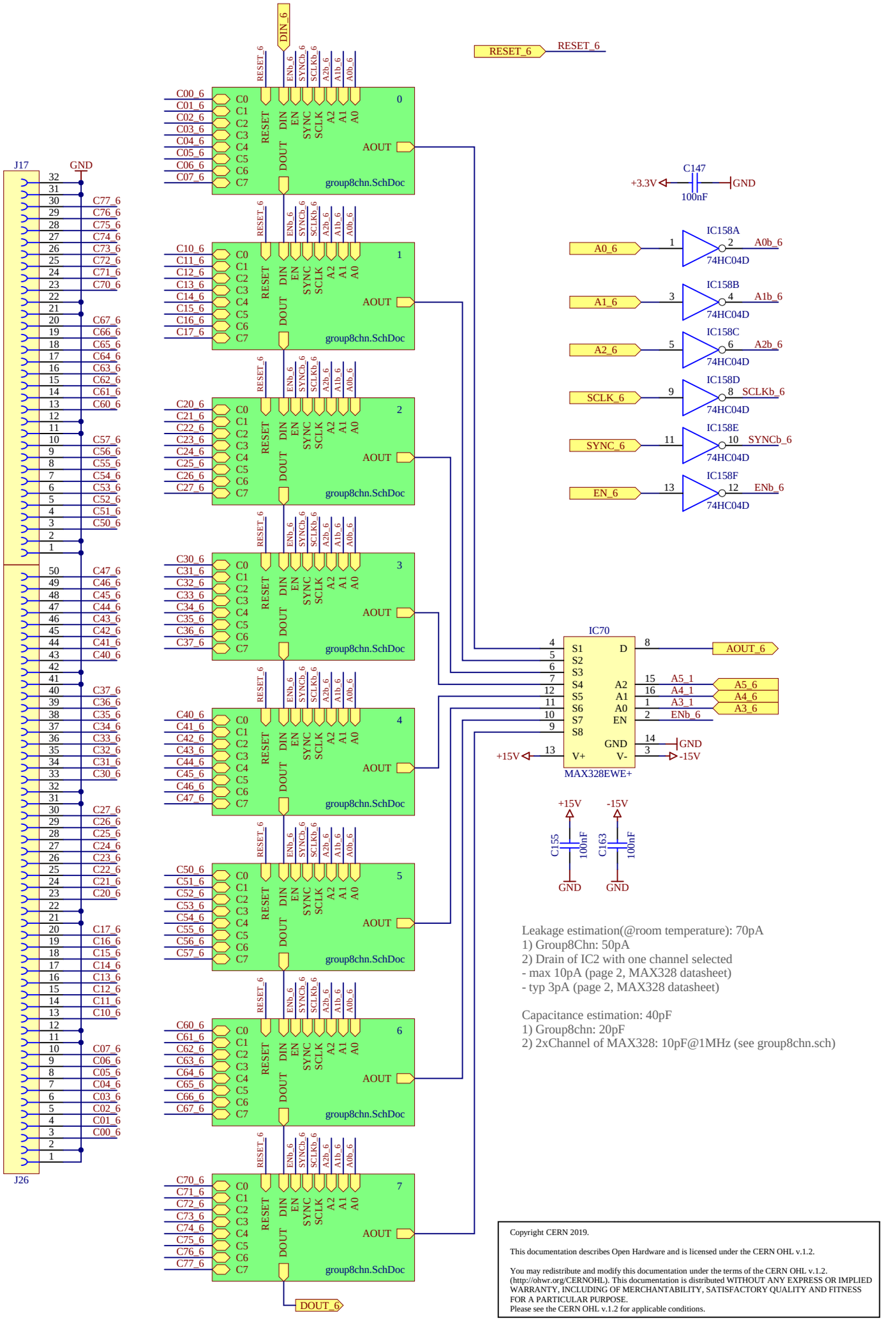

Copyright CERN 2019.

This documentation describes Open Hardware and is licensed under the CERN OHL v.1.2.

You may redistribute and modify this documentation under the terms of the CERN OHL v.1.2. (http://ohwr.org/CERNOHL). This documentation is distributed WITHOUT ANY EXPRESS OR IMPLIED WARRANTY, INCLUDING OF MERCHANTABILITY, SATISFACTORY QUALITY AND FITNESS FOR A PARTICULAR PURPOSE.
Please see the CERN OHL v.1.2 for applicable conditions.

Project/Equipment	HGC sensor probecard
Document	**HGC sensor probecard Switching Matrix**
Designer	Szymon Kulis
Drawn by	Szymon Kulis 24/08/2016
Check.by	JMW 21-10-2016
Last Mod.	JMW 12/02/2019
File	group64chn.SchDoc
Print Date	14/03/2019 15:19:37
Sheet	6.6of 79
Size	A4
Rev	-

EP/ESE

European Organization for Nuclear Research
CH-1211 Genève 23 - Switzerland

EDA-03518-V3-0

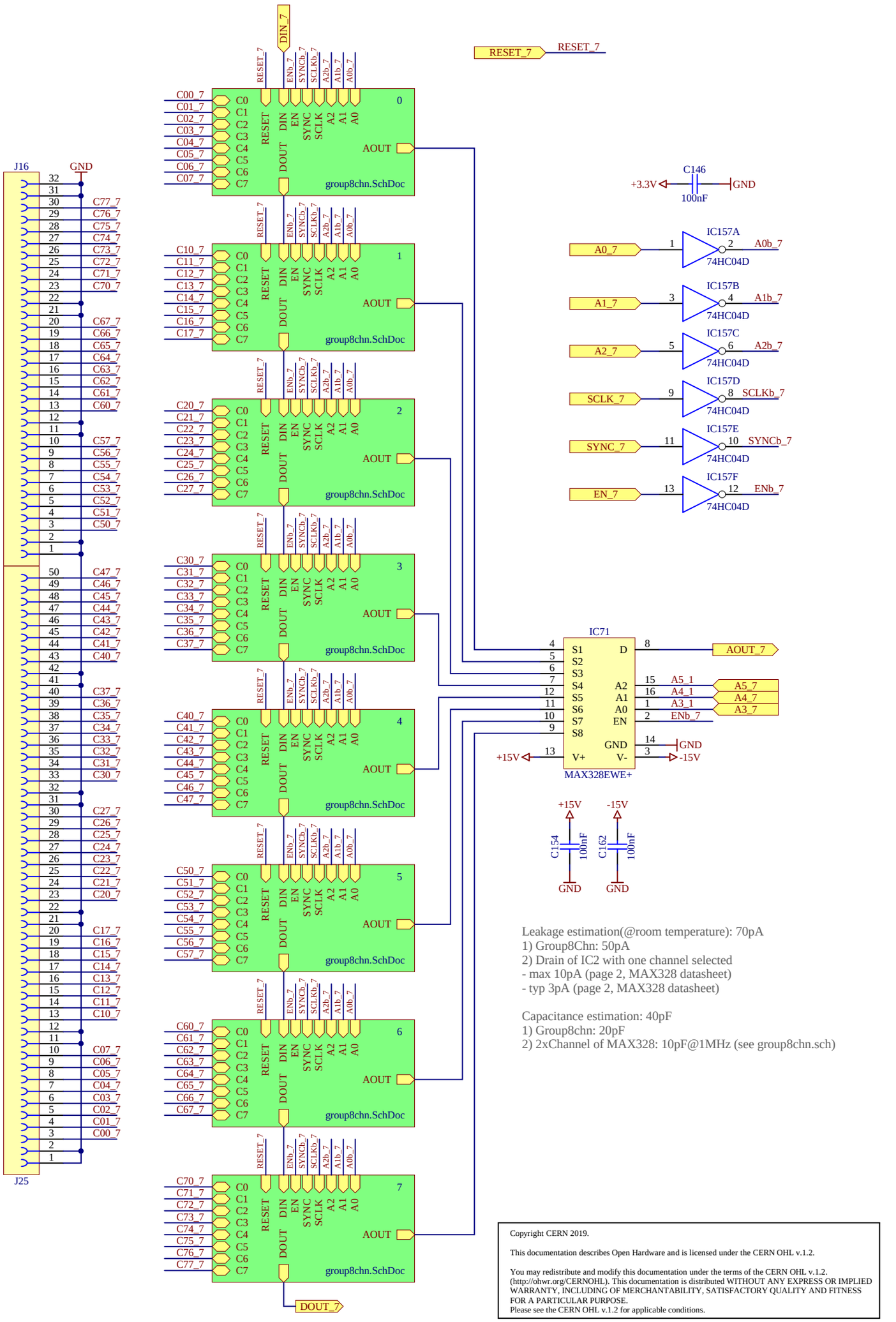

Leakage estimation(@room temperature): 70pA
1) Group8Chn: 50pA
2) Drain of IC2 with one channel selected
- max 10pA (page 2, MAX328 datasheet)
- typ 3pA (page 2, MAX328 datasheet)

Capacitance estimation: 40pF
1) Group8chn: 20pF
2) 2xChannel of MAX328: 10pF@1MHz (see group8chn.sch)

Copyright CERN 2019.

This documentation describes Open Hardware and is licensed under the CERN OHL v.1.2.

You may redistribute and modify this documentation under the terms of the CERN OHL v.1.2. (http://ohwr.org/CERNOHL). This documentation is distributed WITHOUT ANY EXPRESS OR IMPLIED WARRANTY, INCLUDING OF MERCHANTABILITY, SATISFACTORY QUALITY AND FITNESS FOR A PARTICULAR PURPOSE.
Please see the CERN OHL v.1.2 for applicable conditions.

Project/Equipment	HGC sensor probecard		
Document	**HGC sensor probecard Switching Matrix**	Designer	Szymon Kulis
		Drawn by	Szymon Kulis 24/08/2016
		Check.by	JMW 21-10-2016
		Last Mod.	JMW 12/02/2019
		File	group64chn.SchDoc
		Print Date	14/03/2019 15:19:37
		Sheet	6.7of 79
EP/ESE	*European Organization for Nuclear Research CH-1211 Genève 23 - Switzerland*	EDA-03518-V3-0	Size A4 Rev -

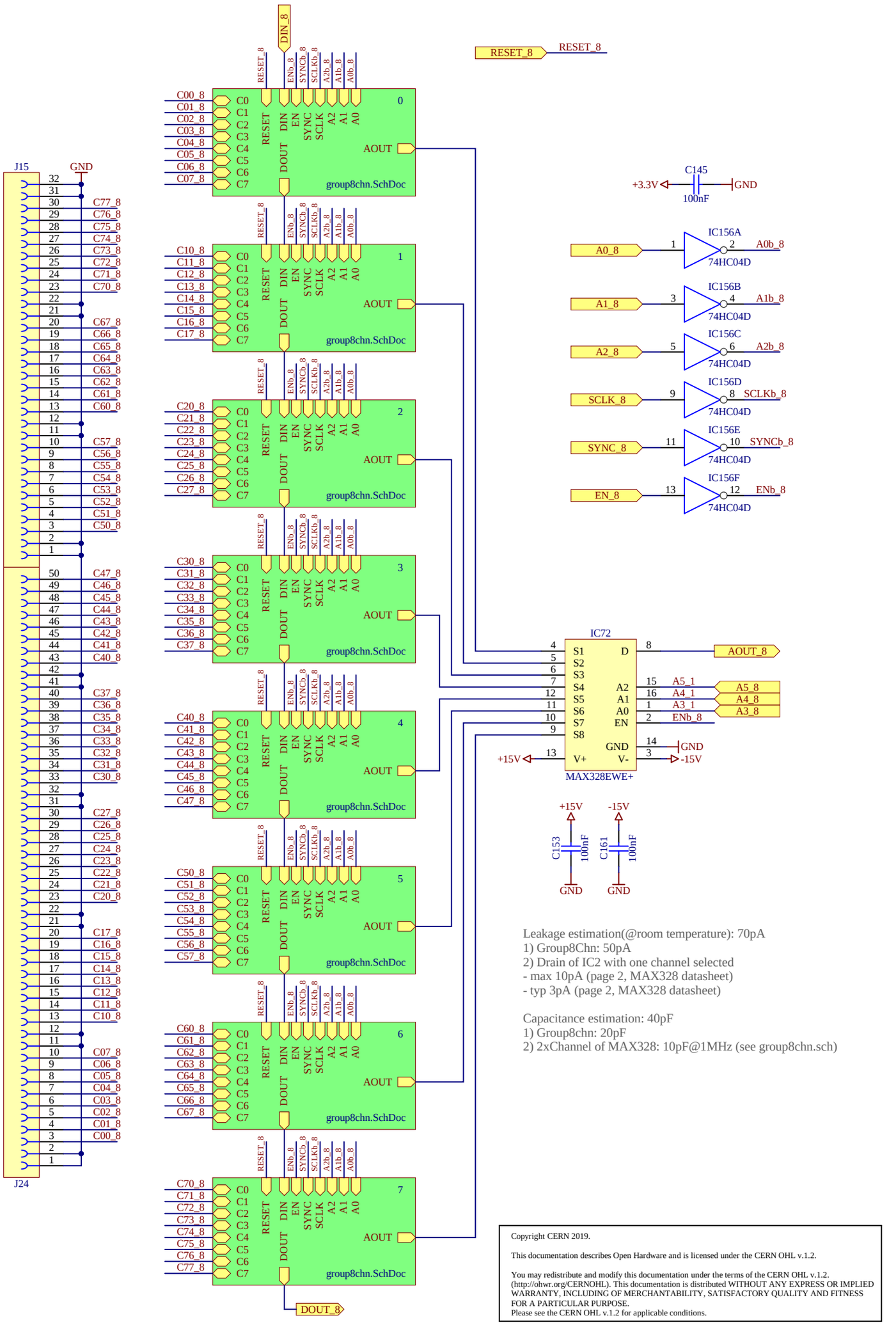

Leakage estimation(@room temperature): 70pA
1) Group8Chn: 50pA
2) Drain of IC2 with one channel selected
- max 10pA (page 2, MAX328 datasheet)
- typ 3pA (page 2, MAX328 datasheet)

Capacitance estimation: 40pF
1) Group8chn: 20pF
2) 2xChannel of MAX328: 10pF@1MHz (see group8chn.sch)

Copyright CERN 2019.

This documentation describes Open Hardware and is licensed under the CERN OHL v.1.2.

You may redistribute and modify this documentation under the terms of the CERN OHL v.1.2. (http://ohwr.org/CERNOHL). This documentation is distributed WITHOUT ANY EXPRESS OR IMPLIED WARRANTY, INCLUDING OF MERCHANTABILITY, SATISFACTORY QUALITY AND FITNESS FOR A PARTICULAR PURPOSE.
Please see the CERN OHL v.1.2 for applicable conditions.

Project/Equipment	HGC sensor probecard		
Document	**HGC sensor probecard Switching Matrix**	Designer	Szymon Kulis
		Drawn by	Szymon Kulis 24/08/2016
		Check.by	JMW 21-10-2016
		Last Mod.	JMW 12/02/2019
		File	group64chn.SchDoc
		Print Date	14/03/2019 15:19:37 Sheet 6.8of 79
EP/ESE	*European Organization for Nuclear Research CH-1211 Genève 23 - Switzerland*	EDA-03518-V3-0	Size A4 Rev -

8 to 1 multiplexer.
if EN then D=S[A]

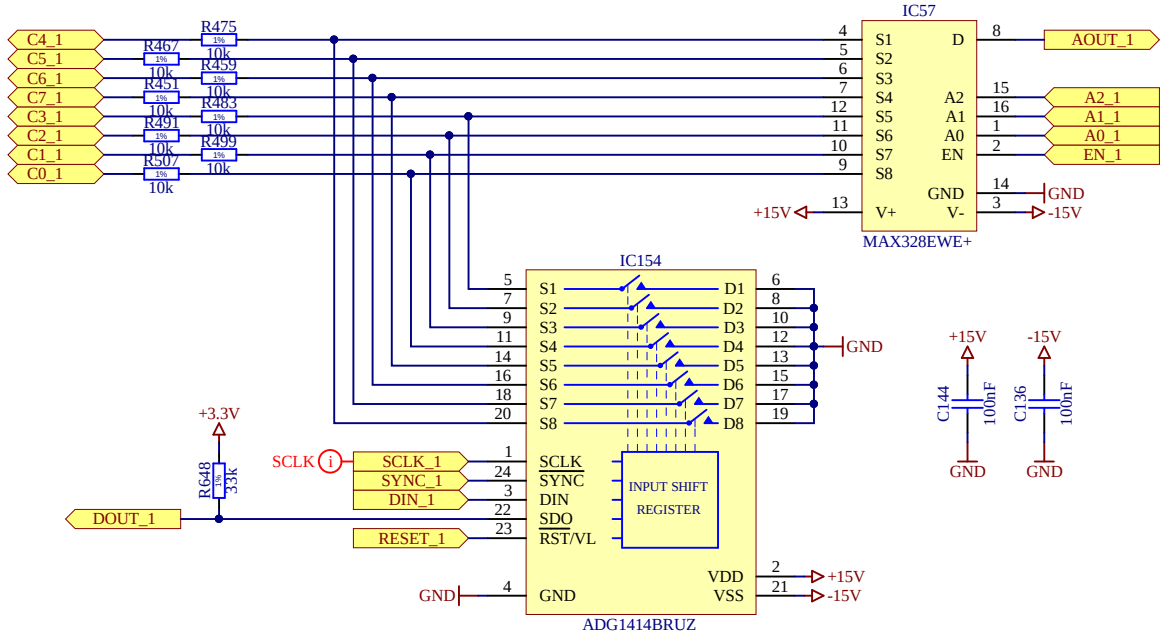

8 x SPST switch. The switches can be controlled independently.
Can be used to short (10 Ohm) each channel to ground (HVRET).

This feature is especially useful when leakage currents are not uniform between neighbor channels, having all channels shorted to the same potential prevents parasitic current flow between channels.

Leakage estimation(@room temperature): 50pA
1)Source Off leakage of ADG1414:
- max 150pA (table 1, page 3, ADG1414 datasheet)
- typical 50pA for 10/-10V input voltages (table 1, page 3, ADG1414 datasheet)
- based on curves for similar switches, the leakage for input voltages close to 0V should be less than that
2) Drain of MAX328 with one channel selected
- max 10pA (page 2, MAX328 datasheet)
- typ 3pA (page 2, MAX328 datasheet)

Capacitance estimation: 20pF
1) Source of ADG1414, 8pF@1MHz typical (table 1, page 3, ADG1414 datasheet)
2) Channel of MAX328: not specified explicitly, but one may estimate it to be around 10pF@1MHz

Copyright CERN 2019.

This documentation describes Open Hardware and is licensed under the CERN OHL v.1.2.

You may redistribute and modify this documentation under the terms of the CERN OHL v.1.2. (http://ohwr.org/CERNOHL). This documentation is distributed WITHOUT ANY EXPRESS OR IMPLIED WARRANTY, INCLUDING OF MERCHANTABILITY, SATISFACTORY QUALITY AND FITNESS FOR A PARTICULAR PURPOSE.
Please see the CERN OHL v.1.2 for applicable conditions.

Project/Equipment	HGC sensor probecard		
Document	**HGC sensor probecard 8 channels group**	Designer	Szymon Kulis
		Drawn by	Szymon Kulis 23/08/2016
		Check.by	JMW 21-10-2016
		Last Mod.	JMW 12/02/2019
		File	group8chn.SchDoc
		Print Date	14/03/2019 15:19:39

EP/ESE

European Organization for Nuclear Research
CH-1211 Genève 23 - Switzerland

EDA-03518-V3-0

Size A4 | Rev -

8 to 1 multiplexer.
if EN then D=S[A]

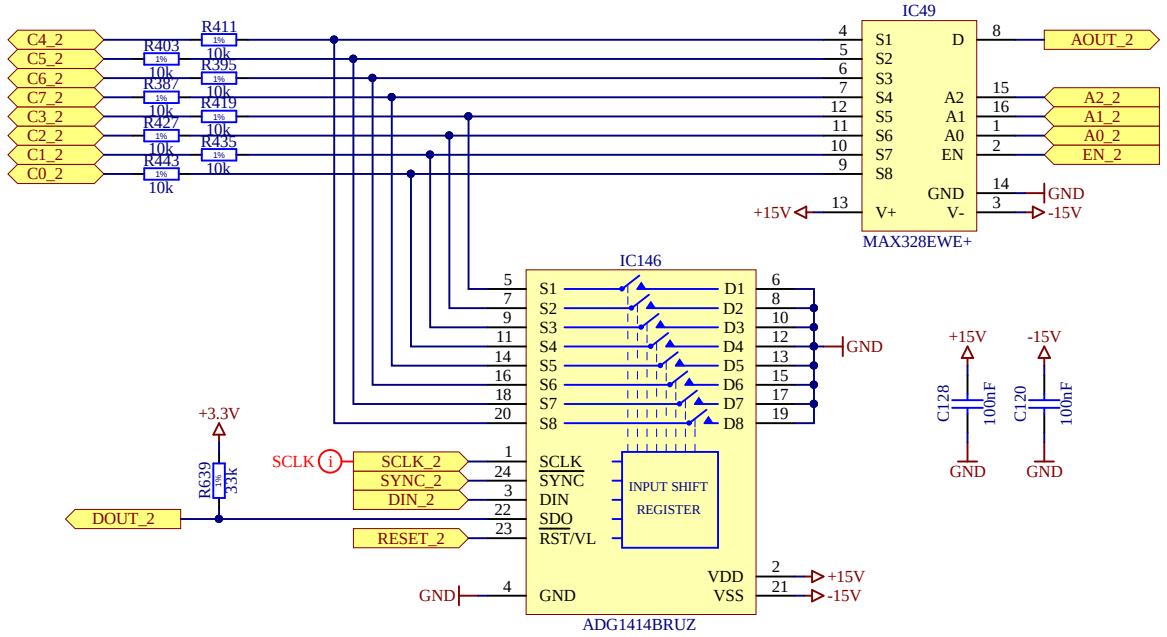

8 x SPST switch. The switches can be controlled independently.
Can be used to short (10 Ohm) each channel to ground (HVRET).

This feature is especially useful when leakage currents are not uniform between neighbor channels, having all channels shorted to the same potential prevents parasitic current flow between channels.

Copyright CERN 2019.

This documentation describes Open Hardware and is licensed under the CERN OHL v.1.2.

You may redistribute and modify this documentation under the terms of the CERN OHL v.1.2. (http://ohwr.org/CERNOHL). This documentation is distributed WITHOUT ANY EXPRESS OR IMPLIED WARRANTY, INCLUDING OF MERCHANTABILITY, SATISFACTORY QUALITY AND FITNESS FOR A PARTICULAR PURPOSE.
Please see the CERN OHL v.1.2 for applicable conditions.

Leakage estimation(@room temperature): 50pA
1)Source Off leakage of ADG1414:
- max 150pA (table 1, page 3, ADG1414 datasheet)
- typical 50pA for 10/-10V input voltages (table 1, page 3, ADG1414 datasheet)
- based on curves for similar switches, the leakage for input voltages close to 0V should be less than that
2) Drain of MAX328 with one channel selected
- max 10pA (page 2, MAX328 datasheet)
- typ 3pA (page 2, MAX328 datasheet)

Capacitance estimation: 20pF
1) Source of ADG1414, 8pF@1MHz typical (table 1, page 3, ADG1414 datasheet)
2) Channel of MAX328: not specified explicitly, but one may estimate it to be around 10pF@1MHz

Project/Equipment	HGC sensor probecard		
Document	**HGC sensor probecard 8 channels group**	Designer	Szymon Kulis
		Drawn by	Szymon Kulis 23/08/2016
		Check.by	JMW 21-10-2016
		Last Mod.	JMW 12/02/2019
		File	group8chn.SchDoc
		Print Date	14/03/2019 15:19:39
EP/ESE	*European Organization for Nuclear Research* *CH-1211 Genève 23 - Switzerland*	Sheet	7.1.2 of 79
	EDA-03518-V3-0	Size	A4
		Rev	-

8 to 1 multiplexer.
if EN then D=S[A]

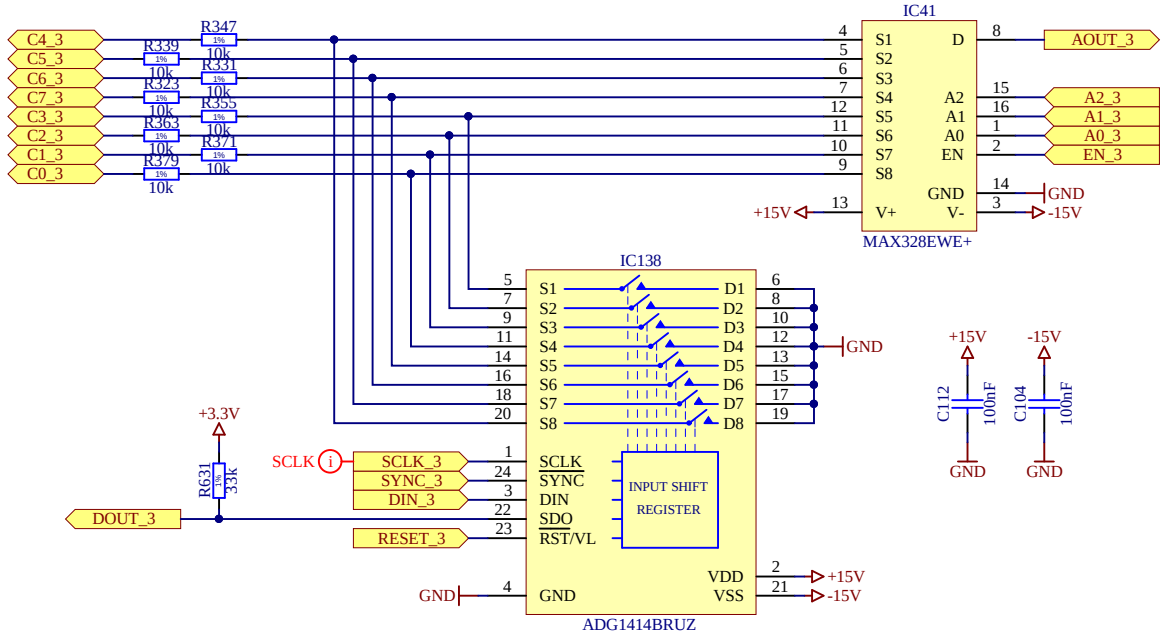

8 x SPST switch. The switches can be controlled independently.
Can be used to short (10 Ohm) each channel to ground (HVRET).

This feature is especially useful when leakage currents are not uniform between neighbor channels, having all channels shorted to the same potential prevents parasitic current flow between channels.

Leakage estimation(@room temperature): 50pA
1)Source Off leakage of ADG1414:
- max 150pA (table 1, page 3, ADG1414 datasheet)
- typical 50pA for 10/-10V input voltages (table 1, page 3, ADG1414 datasheet)
- based on curves for similar switches, the leakage for input voltages close to 0V should be less than that
2) Drain of MAX328 with one channel selected
- max 10pA (page 2, MAX328 datasheet)
- typ 3pA (page 2, MAX328 datasheet)

Capacitance estimation: 20pF
1) Source of ADG1414, 8pF@1MHz typical (table 1, page 3, ADG1414 datasheet)
2) Channel of MAX328: not specified explicitly, but one may estimate it to be around 10pF@1MHz

Copyright CERN 2019.

This documentation describes Open Hardware and is licensed under the CERN OHL v.1.2.

You may redistribute and modify this documentation under the terms of the CERN OHL v.1.2. (http://ohwr.org/CERNOHL). This documentation is distributed WITHOUT ANY EXPRESS OR IMPLIED WARRANTY, INCLUDING OF MERCHANTABILITY, SATISFACTORY QUALITY AND FITNESS FOR A PARTICULAR PURPOSE.
Please see the CERN OHL v.1.2 for applicable conditions.

Project/Equipment	HGC sensor probecard		
Document	**HGC sensor probecard 8 channels group**	Designer	Szymon Kulis
		Drawn by	Szymon Kulis 23/08/2016
		Check.by	JMW 21-10-2016
		Last Mod.	JMW 12/02/2019
		File	group8chn.SchDoc
		Print Date	14/03/2019 15:19:40

EP/ESE

European Organization for Nuclear Research
CH-1211 Genève 23 - Switzerland

EDA-03518-V3-0

Size A4 | Rev -

8 to 1 multiplexer.
if EN then D=S[A]

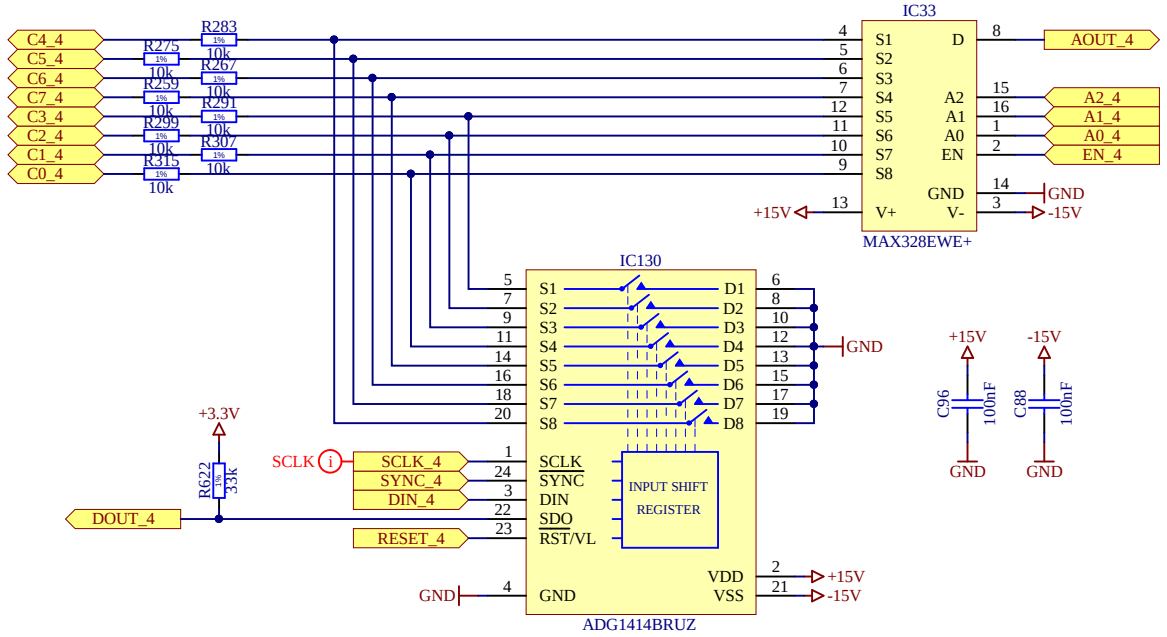

8 x SPST switch. The switches can be controlled independently.
Can be used to short (10 Ohm) each channel to ground (HVRET).

This feature is especially useful when leakage currents are not uniform between neighbor channels, having all channels shorted to the same potential prevents parasitic current flow between channels.

Leakage estimation(@room temperature): 50pA
1)Source Off leakage of ADG1414:
- max 150pA (table 1, page 3, ADG1414 datasheet)
- typical 50pA for 10/-10V input voltages (table 1, page 3, ADG1414 datasheet)
- based on curves for similar switches, the leakage for input voltages close to 0V should be less than that
2) Drain of MAX328 with one channel selected
- max 10pA (page 2, MAX328 datasheet)
- typ 3pA (page 2, MAX328 datasheet)

Capacitance estimation: 20pF
1) Source of ADG1414, 8pF@1MHz typical (table 1, page 3, ADG1414 datasheet)
2) Channel of MAX328: not specified explicitly, but one may estimate it to be around 10pF@1MHz

Copyright CERN 2019.

This documentation describes Open Hardware and is licensed under the CERN OHL v.1.2.

You may redistribute and modify this documentation under the terms of the CERN OHL v.1.2. (http://ohwr.org/CERNOHL). This documentation is distributed WITHOUT ANY EXPRESS OR IMPLIED WARRANTY, INCLUDING OF MERCHANTABILITY, SATISFACTORY QUALITY AND FITNESS FOR A PARTICULAR PURPOSE.
Please see the CERN OHL v.1.2 for applicable conditions.

Project/Equipment	HGC sensor probecard		
Document	**HGC sensor probecard 8 channels group**	Designer	Szymon Kulis
		Drawn by	Szymon Kulis 23/08/2016
		Check.by	JMW 21-10-2016
		Last Mod.	JMW 12/02/2019
		File	group8chn.SchDoc
		Print Date	14/03/2019 15:19:40

EP/ESE

European Organization for Nuclear Research
CH-1211 Genève 23 - Switzerland

EDA-03518-V3-0 | Size A4 | Rev -

8 to 1 multiplexer.
if EN then D=S[A]

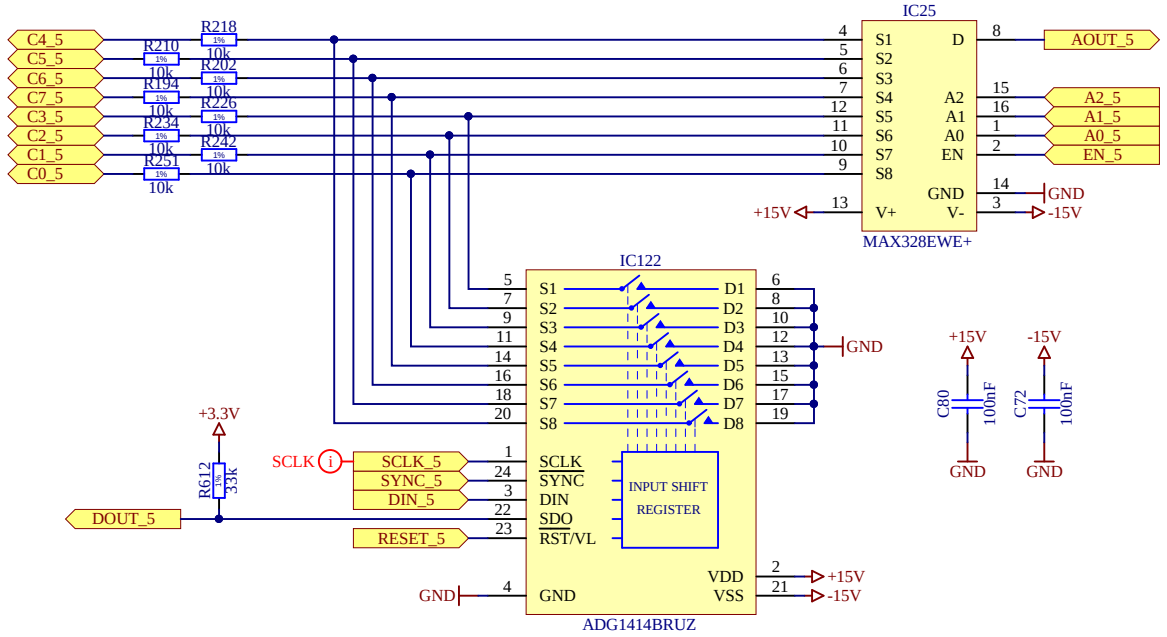

8 x SPST switch. The switches can be controlled independently.
Can be used to short (10 Ohm) each channel to ground (HVRET).

This feature is especially useful when leakage currents are not uniform between neighbor channels, having all channels shorted to the same potential prevents parasitic current flow between channels.

Leakage estimation(@room temperature): 50pA
1)Source Off leakage of ADG1414:
- max 150pA (table 1, page 3, ADG1414 datasheet)
- typical 50pA for 10/-10V input voltages (table 1, page 3, ADG1414 datasheet)
- based on curves for similar switches, the leakage for input voltages close to 0V should be less than that
2) Drain of MAX328 with one channel selected
- max 10pA (page 2, MAX328 datasheet)
- typ 3pA (page 2, MAX328 datasheet)

Capacitance estimation: 20pF
1) Source of ADG1414, 8pF@1MHz typical (table 1, page 3, ADG1414 datasheet)
2) Channel of MAX328: not specified explicitly, but one may estimate it to be around 10pF@1MHz

Copyright CERN 2019.

This documentation describes Open Hardware and is licensed under the CERN OHL v.1.2.

You may redistribute and modify this documentation under the terms of the CERN OHL v.1.2. (http://ohwr.org/CERNOHL). This documentation is distributed WITHOUT ANY EXPRESS OR IMPLIED WARRANTY, INCLUDING OF MERCHANTABILITY, SATISFACTORY QUALITY AND FITNESS FOR A PARTICULAR PURPOSE.
Please see the CERN OHL v.1.2 for applicable conditions.

Project/Equipment	HGC sensor probecard		
Document	**HGC sensor probecard 8 channels group**	Designer	Szymon Kulis
		Drawn by	Szymon Kulis 23/08/2016
		Check.by	JMW 21-10-2016
		Last Mod.	JMW 12/02/2019
		File	group8chn.SchDoc
		Print Date	14/03/2019 15:19:41

EP/ESE

European Organization for Nuclear Research
CH-1211 Genève 23 - Switzerland

EDA-03518-V3-0 | Size A4 | Rev -

8 to 1 multiplexer.
if EN then D=S[A]

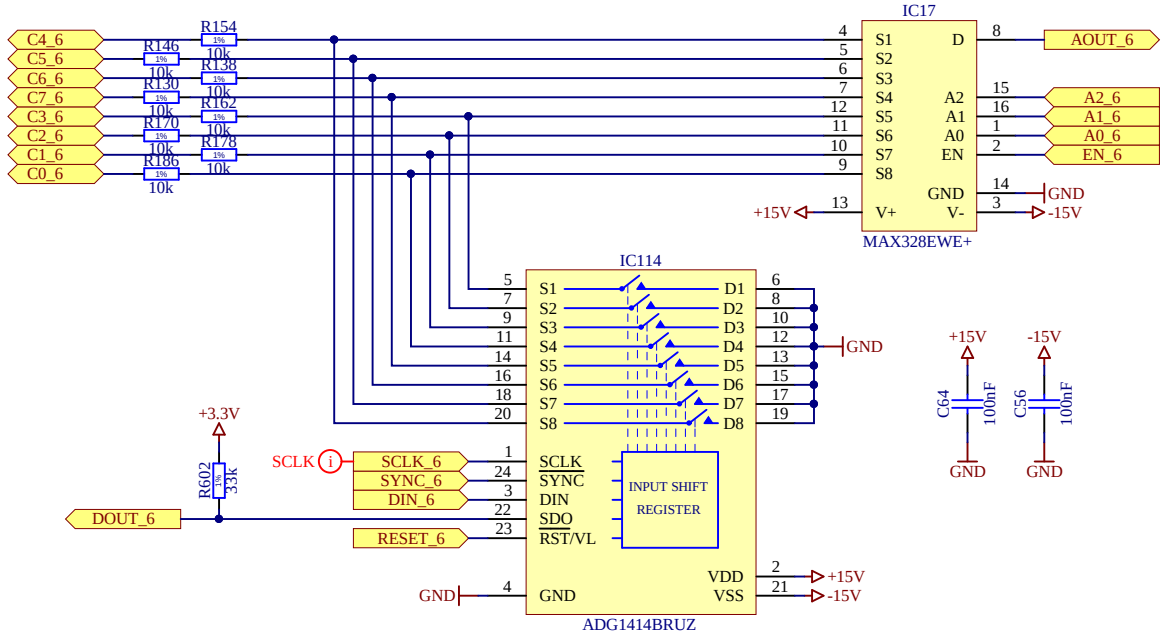

8 x SPST switch. The switches can be controlled independently.
Can be used to short (10 Ohm) each channel to ground (HVRET).

This feature is especially useful when leakage currents are not uniform between neighbor channels, having all channels shorted to the same potential prevents parasitic current flow between channels.

Leakage estimation(@room temperature): 50pA
1)Source Off leakage of ADG1414:
- max 150pA (table 1, page 3, ADG1414 datasheet)
- typical 50pA for 10/-10V input voltages (table 1, page 3, ADG1414 datasheet)
- based on curves for similar switches, the leakage for input voltages close to 0V should be less than that
2) Drain of MAX328 with one channel selected
- max 10pA (page 2, MAX328 datasheet)
- typ 3pA (page 2, MAX328 datasheet)

Capacitance estimation: 20pF
1) Source of ADG1414, 8pF@1MHz typical (table 1, page 3, ADG1414 datasheet)
2) Channel of MAX328: not specified explicitly, but one may estimate it to be around 10pF@1MHz

Copyright CERN 2019.

This documentation describes Open Hardware and is licensed under the CERN OHL v.1.2.

You may redistribute and modify this documentation under the terms of the CERN OHL v.1.2. (http://ohwr.org/CERNOHL). This documentation is distributed WITHOUT ANY EXPRESS OR IMPLIED WARRANTY, INCLUDING OF MERCHANTABILITY, SATISFACTORY QUALITY AND FITNESS FOR A PARTICULAR PURPOSE.
Please see the CERN OHL v.1.2 for applicable conditions.

Project/Equipment	HGC sensor probecard		
Document	**HGC sensor probecard 8 channels group**	Designer	Szymon Kulis
		Drawn by	Szymon Kulis 23/08/2016
		Check.by	JMW 21-10-2016
		Last Mod.	JMW 12/02/2019
		File	group8chn.SchDoc
		Print Date	14/03/2019 15:19:41

EP/ESE

European Organization for Nuclear Research
CH-1211 Genève 23 - Switzerland

EDA-03518-V3-0 | Size A4 | Rev -

8 to 1 multiplexer.
if EN then D=S[A]

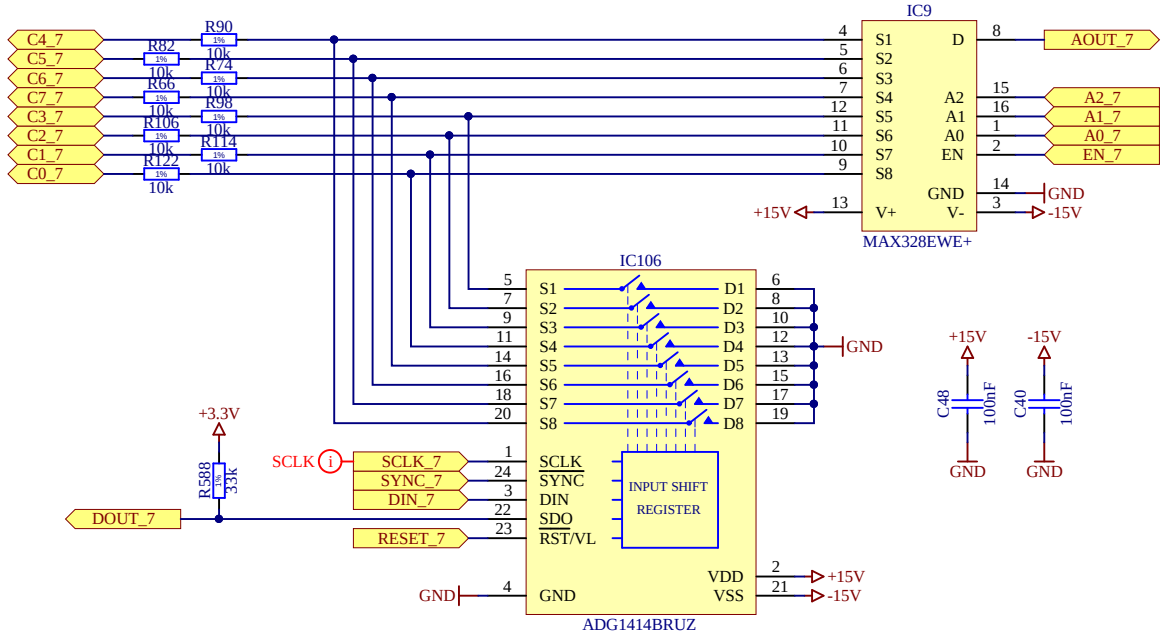

8 x SPST switch. The switches can be controlled independently.
Can be used to short (10 Ohm) each channel to ground (HVRET).

This feature is especially useful when leakage currents are not uniform between neighbor channels, having all channels shorted to the same potential prevents parasitic current flow between channels.

Copyright CERN 2019.

This documentation describes Open Hardware and is licensed under the CERN OHL v.1.2.

You may redistribute and modify this documentation under the terms of the CERN OHL v.1.2. (http://ohwr.org/CERNOHL). This documentation is distributed WITHOUT ANY EXPRESS OR IMPLIED WARRANTY, INCLUDING OF MERCHANTABILITY, SATISFACTORY QUALITY AND FITNESS FOR A PARTICULAR PURPOSE.
Please see the CERN OHL v.1.2 for applicable conditions.

Leakage estimation(@room temperature): 50pA
1)Source Off leakage of ADG1414:
- max 150pA (table 1, page 3, ADG1414 datasheet)
- typical 50pA for 10/-10V input voltages (table 1, page 3, ADG1414 datasheet)
- based on curves for similar switches, the leakage for input voltages close to 0V should be less than that
2) Drain of MAX328 with one channel selected
- max 10pA (page 2, MAX328 datasheet)
- typ 3pA (page 2, MAX328 datasheet)

Capacitance estimation: 20pF
1) Source of ADG1414, 8pF@1MHz typical (table 1, page 3, ADG1414 datasheet)
2) Channel of MAX328: not specified explicitly, but one may estimate it to be around 10pF@1MHz

Project/Equipment	HGC sensor probecard		
Document	**HGC sensor probecard 8 channels group**	Designer	Szymon Kulis
		Drawn by	Szymon Kulis 23/08/2016
		Check.by	JMW 21-10-2016
		Last Mod.	JMW 12/02/2019
		File	group8chn.SchDoc
		Print Date	14/03/2019 15:19:42 Sheet 7.1.7 of 79
EP/ESE CERN	European Organization for Nuclear Research CH-1211 Genève 23 - Switzerland	EDA-03518-V3-0	Size A4 Rev -

8 to 1 multiplexer.
if EN then D=S[A]

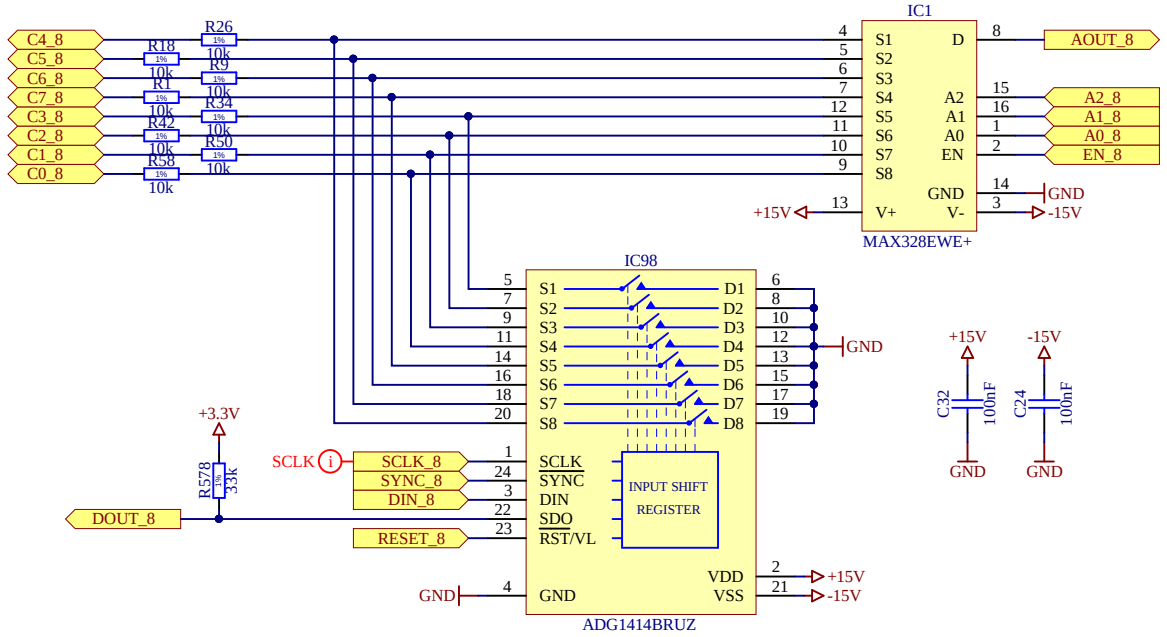

8 x SPST switch. The switches can be controlled independently.
Can be used to short (10 Ohm) each channel to ground (HVRET).

This feature is especially useful when leakage currents are not uniform between neighbor channels, having all channels shorted to the same potential prevents parasitic current flow between channels.

Leakage estimation(@room temperature): 50pA
1)Source Off leakage of ADG1414:
- max 150pA (table 1, page 3, ADG1414 datasheet)
- typical 50pA for 10/-10V input voltages (table 1, page 3, ADG1414 datasheet)
- based on curves for similar switches, the leakage for input voltages close to 0V should be less than that
2) Drain of MAX328 with one channel selected
- max 10pA (page 2, MAX328 datasheet)
- typ 3pA (page 2, MAX328 datasheet)

Capacitance estimation: 20pF
1) Source of ADG1414, 8pF@1MHz typical (table 1, page 3, ADG1414 datasheet)
2) Channel of MAX328: not specified explicitly, but one may estimate it to be around 10pF@1MHz

Copyright CERN 2019.

This documentation describes Open Hardware and is licensed under the CERN OHL v.1.2.

You may redistribute and modify this documentation under the terms of the CERN OHL v.1.2. (http://ohwr.org/CERNOHL). This documentation is distributed WITHOUT ANY EXPRESS OR IMPLIED WARRANTY, INCLUDING OF MERCHANTABILITY, SATISFACTORY QUALITY AND FITNESS FOR A PARTICULAR PURPOSE.
Please see the CERN OHL v.1.2 for applicable conditions.

Project/Equipment	HGC sensor probecard		
Document	**HGC sensor probecard 8 channels group**	Designer	Szymon Kulis
		Drawn by	Szymon Kulis 23/08/2016
		Check.by	JMW 21-10-2016
		Last Mod.	JMW 12/02/2019
		File	group8chn.SchDoc
		Print Date	14/03/2019 15:19:42

EP/ESE

European Organization for Nuclear Research
CH-1211 Genève 23 - Switzerland

EDA-03518-V3-0 | Size A4 | Rev -

8 to 1 multiplexer.
if EN then D=S[A]

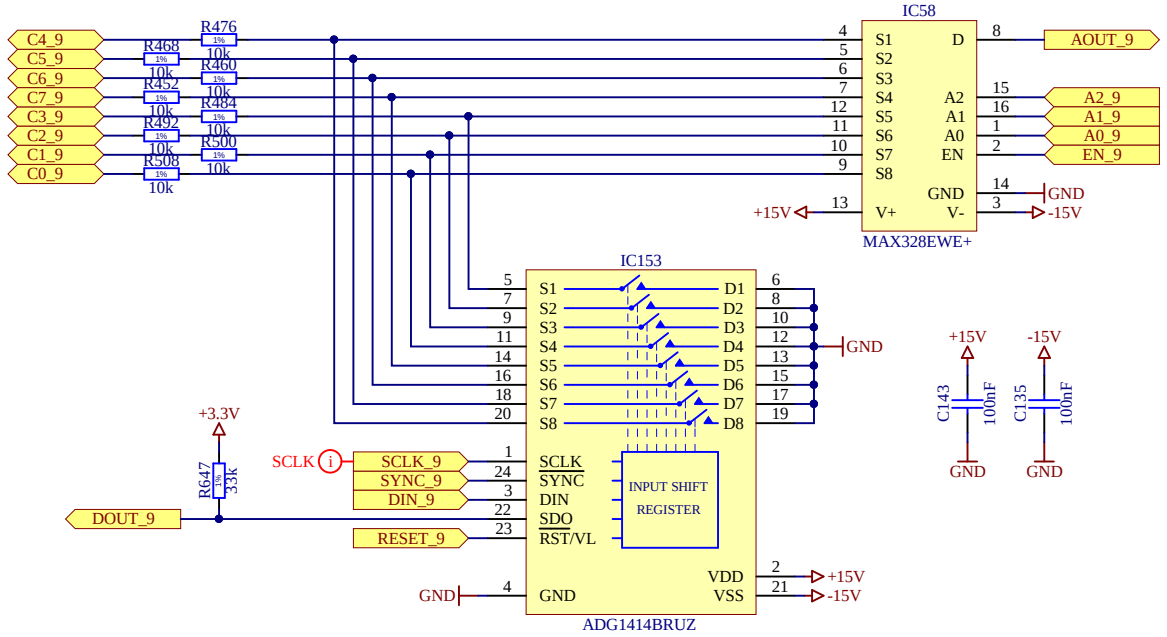

8 x SPST switch. The switches can be controlled independently.
Can be used to short (10 Ohm) each channel to ground (HVRET).

This feature is especially useful when leakage currents are not uniform between neighbor channels, having all channels shorted to the same potential prevents parasitic current flow between channels.

Leakage estimation(@room temperature): 50pA
1)Source Off leakage of ADG1414:
- max 150pA (table 1, page 3, ADG1414 datasheet)
- typical 50pA for 10/-10V input voltages (table 1, page 3, ADG1414 datasheet)
- based on curves for similar switches, the leakage for input voltages close to 0V should be less than that
2) Drain of MAX328 with one channel selected
- max 10pA (page 2, MAX328 datasheet)
- typ 3pA (page 2, MAX328 datasheet)

Capacitance estimation: 20pF
1) Source of ADG1414, 8pF@1MHz typical (table 1, page 3, ADG1414 datasheet)
2) Channel of MAX328: not specified explicitly, but one may estimate it to be around 10pF@1MHz

Copyright CERN 2019.

This documentation describes Open Hardware and is licensed under the CERN OHL v.1.2.

You may redistribute and modify this documentation under the terms of the CERN OHL v.1.2. (http://ohwr.org/CERNOHL). This documentation is distributed WITHOUT ANY EXPRESS OR IMPLIED WARRANTY, INCLUDING OF MERCHANTABILITY, SATISFACTORY QUALITY AND FITNESS FOR A PARTICULAR PURPOSE.
Please see the CERN OHL v.1.2 for applicable conditions.

Project/Equipment	HGC sensor probecard		
Document	**HGC sensor probecard 8 channels group**	Designer	Szymon Kulis
		Drawn by	Szymon Kulis 23/08/2016
		Check.by	JMW 21-10-2016
		Last Mod.	JMW 12/02/2019
		File	group8chn.SchDoc
		Print Date	14/03/2019 15:19:42

EP/ESE

European Organization for Nuclear Research
CH-1211 Genève 23 - Switzerland

EDA-03518-V3-0

Sheet 7.2.bf 79

Size A4 | Rev -

8 to 1 multiplexer.
if EN then D=S[A]

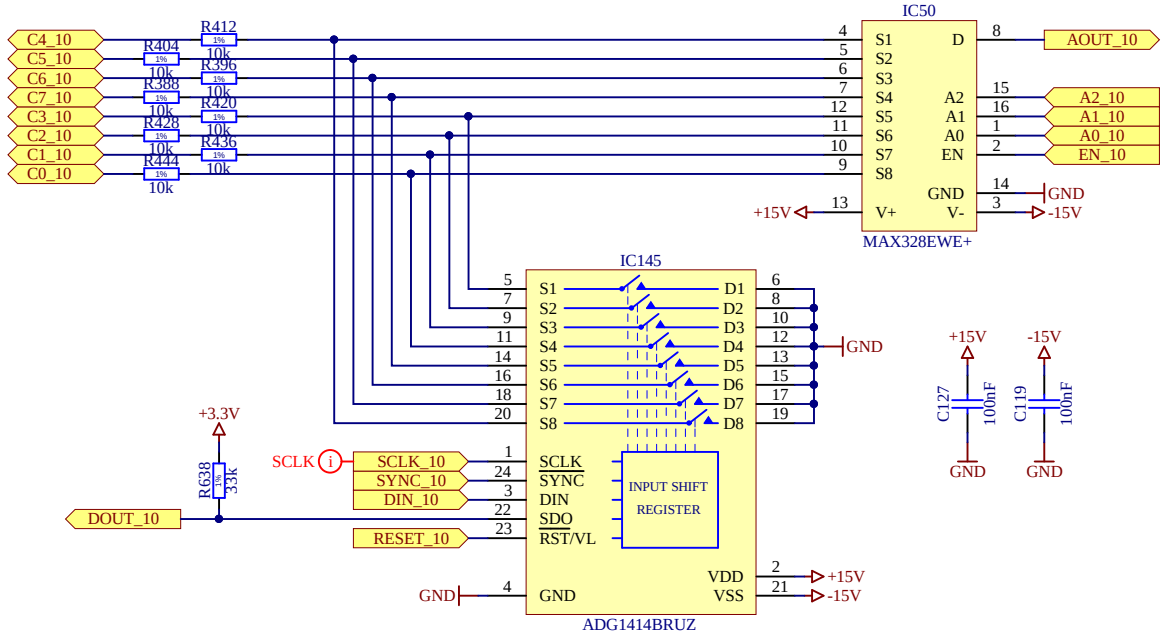

8 x SPST switch. The switches can be controlled independently.
Can be used to short (10 Ohm) each channel to ground (HVRET).

This feature is especially useful when leakage currents are not uniform between neighbor channels, having all channels shorted to the same potential prevents parasitic current flow between channels.

Leakage estimation(@room temperature): 50pA
1)Source Off leakage of ADG1414:
- max 150pA (table 1, page 3, ADG1414 datasheet)
- typical 50pA for 10/-10V input voltages (table 1, page 3, ADG1414 datasheet)
- based on curves for similar switches, the leakage for input voltages close to 0V should be less than that
2) Drain of MAX328 with one channel selected
- max 10pA (page 2, MAX328 datasheet)
- typ 3pA (page 2, MAX328 datasheet)

Capacitance estimation: 20pF
1) Source of ADG1414, 8pF@1MHz typical (table 1, page 3, ADG1414 datasheet)
2) Channel of MAX328: not specified explicitly, but one may estimate it to be around 10pF@1MHz

Copyright CERN 2019.

This documentation describes Open Hardware and is licensed under the CERN OHL v.1.2.

You may redistribute and modify this documentation under the terms of the CERN OHL v.1.2. (http://ohwr.org/CERNOHL). This documentation is distributed WITHOUT ANY EXPRESS OR IMPLIED WARRANTY, INCLUDING OF MERCHANTABILITY, SATISFACTORY QUALITY AND FITNESS FOR A PARTICULAR PURPOSE.
Please see the CERN OHL v.1.2 for applicable conditions.

Project/Equipment	HGC sensor probecard		
Document	**HGC sensor probecard 8 channels group**	Designer	Szymon Kulis
		Drawn by	Szymon Kulis 23/08/2016
		Check.by	JMW 21-10-2016
		Last Mod.	JMW 12/02/2019
		File	group8chn.SchDoc
		Print Date	14/03/2019 15:19:43
		Sheet	7.2.2 of 79
EP/ESE	*European Organization for Nuclear Research* *CH-1211 Genève 23 - Switzerland*	EDA-03518-V3-0	Size A4 Rev -

8 to 1 multiplexer.
if EN then D=S[A]

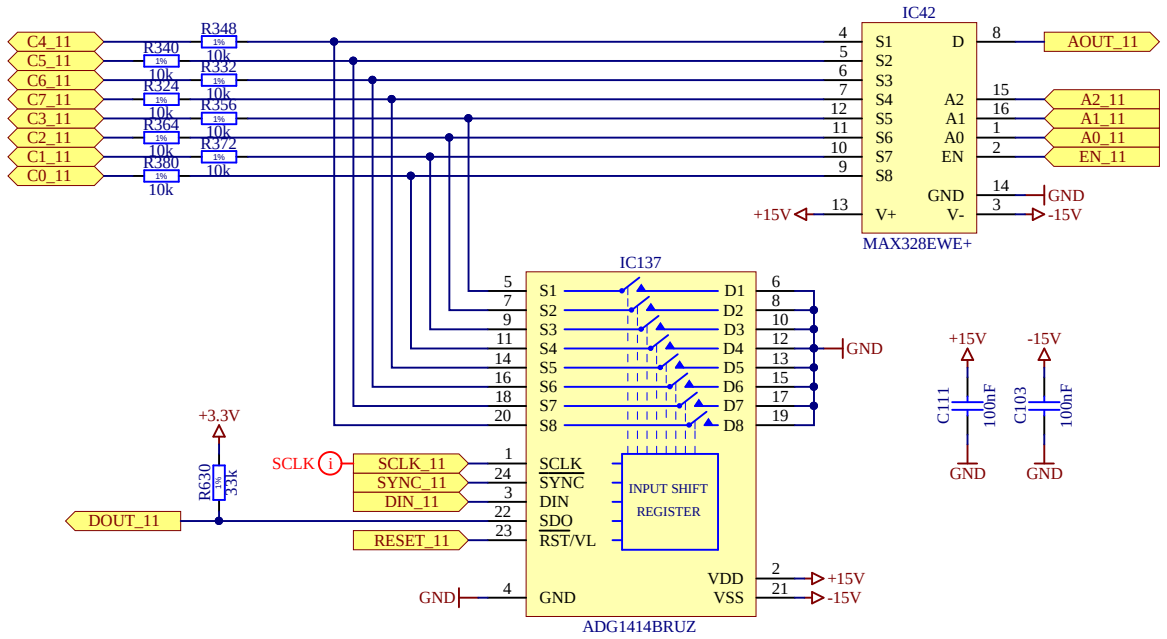

8 x SPST switch. The switches can be controlled independently.
Can be used to short (10 Ohm) each channel to ground (HVRET).

This feature is especially useful when leakage currents are not uniform between neighbor channels, having all channels shorted to the same potential prevents parasitic current flow between channels.

Leakage estimation(@room temperature): 50pA
1)Source Off leakage of ADG1414:
- max 150pA (table 1, page 3, ADG1414 datasheet)
- typical 50pA for 10/-10V input voltages (table 1, page 3, ADG1414 datasheet)
- based on curves for similar switches, the leakage for input voltages close to 0V should be less than that
2) Drain of MAX328 with one channel selected
- max 10pA (page 2, MAX328 datasheet)
- typ 3pA (page 2, MAX328 datasheet)

Capacitance estimation: 20pF
1) Source of ADG1414, 8pF@1MHz typical (table 1, page 3, ADG1414 datasheet)
2) Channel of MAX328: not specified explicitly, but one may estimate it to be around 10pF@1MHz

Copyright CERN 2019.

This documentation describes Open Hardware and is licensed under the CERN OHL v.1.2.

You may redistribute and modify this documentation under the terms of the CERN OHL v.1.2. (http://ohwr.org/CERNOHL). This documentation is distributed WITHOUT ANY EXPRESS OR IMPLIED WARRANTY, INCLUDING OF MERCHANTABILITY, SATISFACTORY QUALITY AND FITNESS FOR A PARTICULAR PURPOSE.
Please see the CERN OHL v.1.2 for applicable conditions.

Project/Equipment	HGC sensor probecard		
Document	**HGC sensor probecard 8 channels group**	Designer	Szymon Kulis
		Drawn by	Szymon Kulis 23/08/2016
		Check.by	JMW 21-10-2016
		Last Mod.	JMW 12/02/2019
		File	group8chn.SchDoc
		Print Date	14/03/2019 15:19:43

EP/ESE

European Organization for Nuclear Research
CH-1211 Genève 23 - Switzerland

EDA-03518-V3-0

Size A4 | Rev -

8 to 1 multiplexer.
if EN then D=S[A]

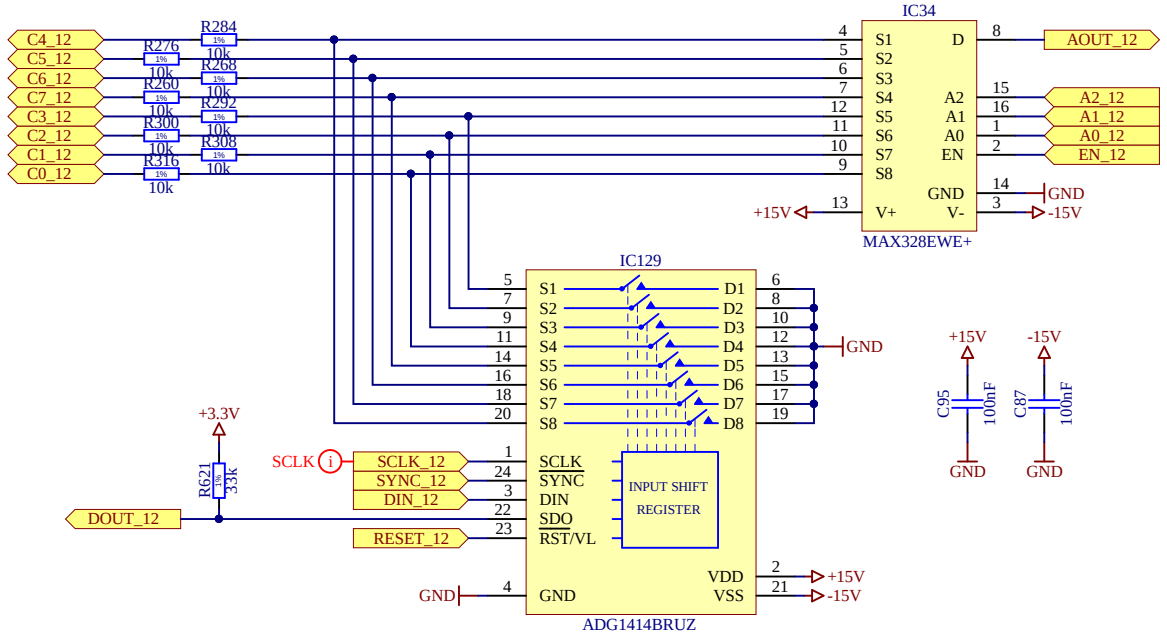

8 x SPST switch. The switches can be controlled independently.
Can be used to short (10 Ohm) each channel to ground (HVRET).

This feature is especially useful when leakage currents are not uniform between neighbor channels, having all channels shorted to the same potential prevents parasitic current flow between channels.

Leakage estimation(@room temperature): 50pA
1)Source Off leakage of ADG1414:
- max 150pA (table 1, page 3, ADG1414 datasheet)
- typical 50pA for 10/-10V input voltages (table 1, page 3, ADG1414 datasheet)
- based on curves for similar switches, the leakage for input voltages close to 0V should be less than that
2) Drain of MAX328 with one channel selected
- max 10pA (page 2, MAX328 datasheet)
- typ 3pA (page 2, MAX328 datasheet)

Capacitance estimation: 20pF
1) Source of ADG1414, 8pF@1MHz typical (table 1, page 3, ADG1414 datasheet)
2) Channel of MAX328: not specified explicitly, but one may estimate it to be around 10pF@1MHz

Copyright CERN 2019.

This documentation describes Open Hardware and is licensed under the CERN OHL v.1.2.

You may redistribute and modify this documentation under the terms of the CERN OHL v.1.2. (http://ohwr.org/CERNOHL). This documentation is distributed WITHOUT ANY EXPRESS OR IMPLIED WARRANTY, INCLUDING OF MERCHANTABILITY, SATISFACTORY QUALITY AND FITNESS FOR A PARTICULAR PURPOSE.
Please see the CERN OHL v.1.2 for applicable conditions.

Project/Equipment	HGC sensor probecard		
Document	**HGC sensor probecard 8 channels group**	Designer	Szymon Kulis
		Drawn by	Szymon Kulis 23/08/2016
		Check.by	JMW 21-10-2016
		Last Mod.	JMW 12/02/2019
		File	group8chn.SchDoc
		Print Date	14/03/2019 15:19:44

EP/ESE

European Organization for Nuclear Research
CH-1211 Genève 23 - Switzerland

EDA-03518-V3-0 | Size A4 | Rev -

8 to 1 multiplexer.
if EN then D=S[A]

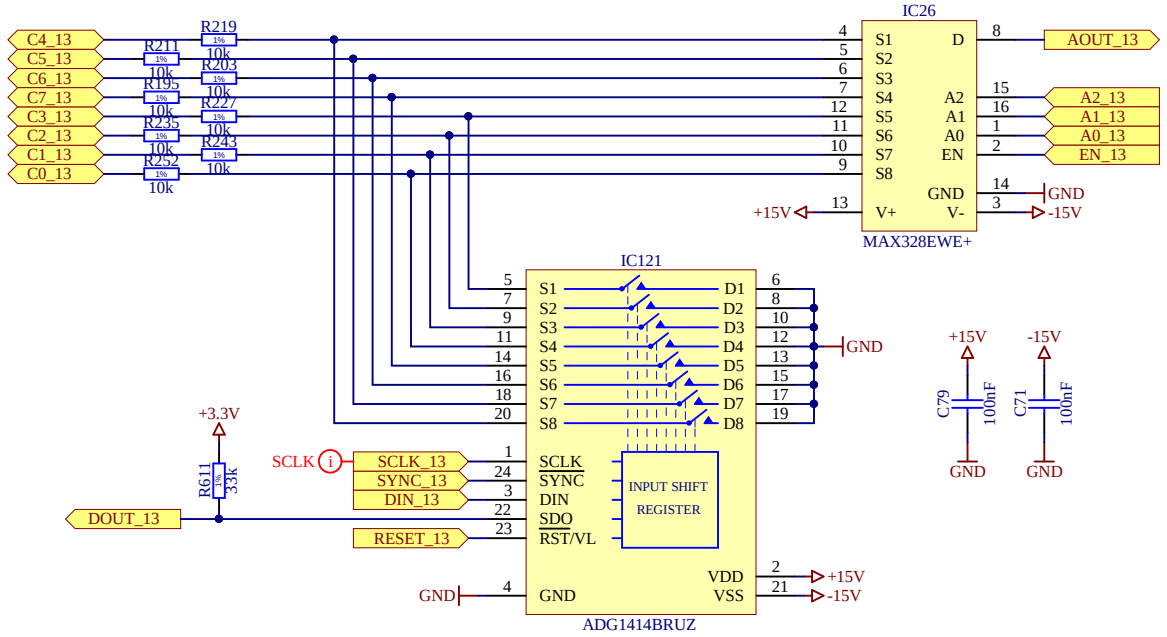

8 x SPST switch. The switches can be controlled independently.
Can be used to short (10 Ohm) each channel to ground (HVRET).

This feature is especially useful when leakage currents are not uniform between neighbor channels, having all channels shorted to the same potential prevents parasitic current flow between channels.

Leakage estimation(@room temperature): 50pA
1)Source Off leakage of ADG1414:
- max 150pA (table 1, page 3, ADG1414 datasheet)
- typical 50pA for 10/-10V input voltages (table 1, page 3, ADG1414 datasheet)
- based on curves for similar switches, the leakage for input voltages close to 0V should be less than that
2) Drain of MAX328 with one channel selected
- max 10pA (page 2, MAX328 datasheet)
- typ 3pA (page 2, MAX328 datasheet)

Capacitance estimation: 20pF
1) Source of ADG1414, 8pF@1MHz typical (table 1, page 3, ADG1414 datasheet)
2) Channel of MAX328: not specified explicitly, but one may estimate it to be around 10pF@1MHz

Copyright CERN 2019.

This documentation describes Open Hardware and is licensed under the CERN OHL v.1.2.

You may redistribute and modify this documentation under the terms of the CERN OHL v.1.2. (http://ohwr.org/CERNOHL). This documentation is distributed WITHOUT ANY EXPRESS OR IMPLIED WARRANTY, INCLUDING OF MERCHANTABILITY, SATISFACTORY QUALITY AND FITNESS FOR A PARTICULAR PURPOSE.
Please see the CERN OHL v.1.2 for applicable conditions.

Project/Equipment	HGC sensor probecard
Document	**HGC sensor probecard 8 channels group**
Designer	Szymon Kulis
Drawn by	Szymon Kulis 23/08/2016
Check.by	JMW 21-10-2016
Last Mod.	JMW 12/02/2019
File	group8chn.SchDoc
Print Date	14/03/2019 15:19:44

EP/ESE

European Organization for Nuclear Research
CH-1211 Genève 23 - Switzerland

EDA-03518-V3-0

Size A4 | Rev -

8 to 1 multiplexer.
if EN then D=S[A]

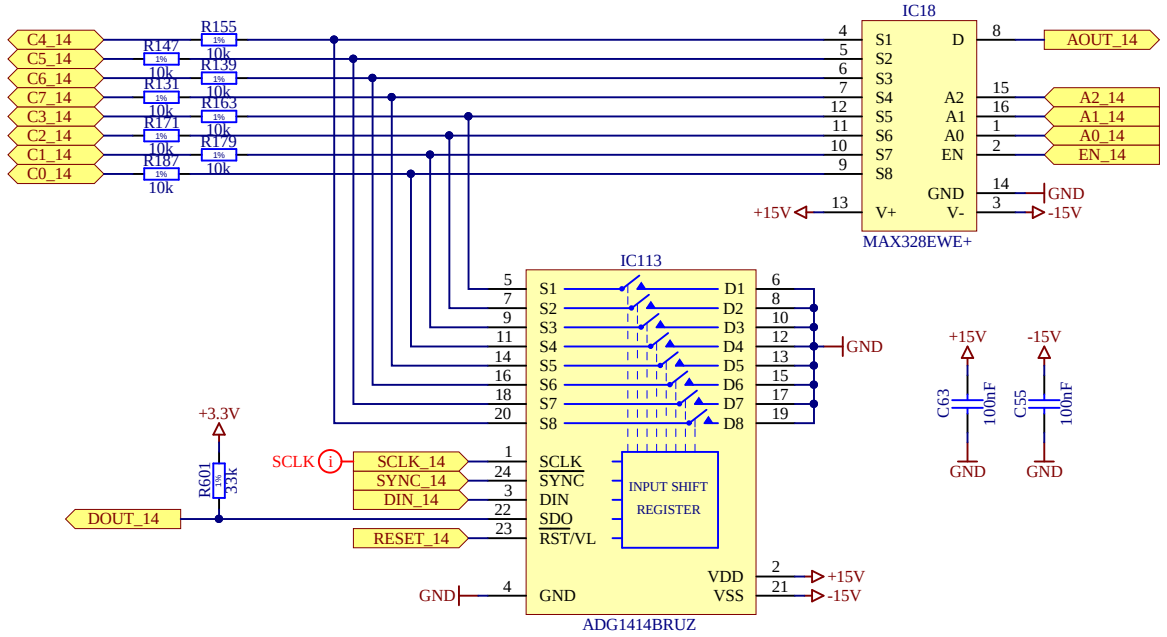

8 x SPST switch. The switches can be controlled independently.
Can be used to short (10 Ohm) each channel to ground (HVRET).

This feature is especially useful when leakage currents are not uniform between neighbor channels, having all channels shorted to the same potential prevents parasitic current flow between channels.

Copyright CERN 2019.

This documentation describes Open Hardware and is licensed under the CERN OHL v.1.2.

You may redistribute and modify this documentation under the terms of the CERN OHL v.1.2. (http://ohwr.org/CERNOHL). This documentation is distributed WITHOUT ANY EXPRESS OR IMPLIED WARRANTY, INCLUDING OF MERCHANTABILITY, SATISFACTORY QUALITY AND FITNESS FOR A PARTICULAR PURPOSE.
Please see the CERN OHL v.1.2 for applicable conditions.

Leakage estimation(@room temperature): 50pA
1)Source Off leakage of ADG1414:
- max 150pA (table 1, page 3, ADG1414 datasheet)
- typical 50pA for 10/-10V input voltages (table 1, page 3, ADG1414 datasheet)
- based on curves for similar switches, the leakage for input voltages close to 0V should be less than that
2) Drain of MAX328 with one channel selected
- max 10pA (page 2, MAX328 datasheet)
- typ 3pA (page 2, MAX328 datasheet)

Capacitance estimation: 20pF
1) Source of ADG1414, 8pF@1MHz typical (table 1, page 3, ADG1414 datasheet)
2) Channel of MAX328: not specified explicitly, but one may estimate it to be around 10pF@1MHz

Project/Equipment	HGC sensor probecard		
Document	**HGC sensor probecard 8 channels group**	Designer	Szymon Kulis
		Drawn by	Szymon Kulis 23/08/2016
		Check.by	JMW 21-10-2016
		Last Mod.	JMW 12/02/2019
		File	group8chn.SchDoc
		Print Date	14/03/2019 15:19:45
		Sheet	7.2.6 of 79
EP/ESE	*European Organization for Nuclear Research* *CH-1211 Genève 23 - Switzerland*	EDA-03518-V3-0	Size A4 Rev -

8 to 1 multiplexer.
if EN then D=S[A]

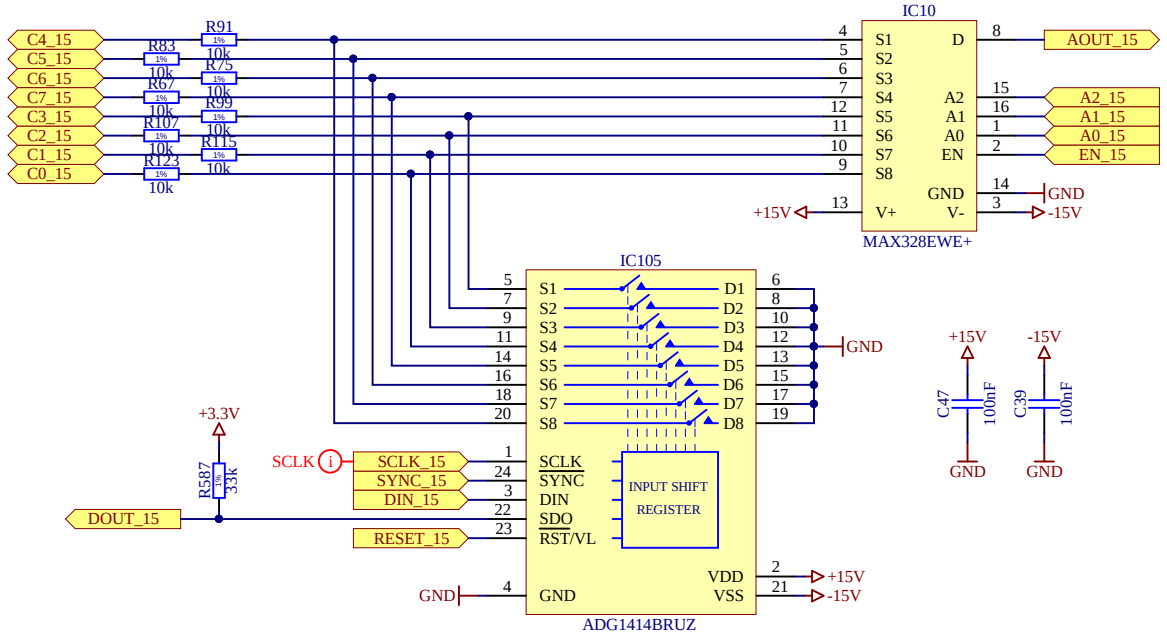

8 x SPST switch. The switches can be controlled independently.
Can be used to short (10 Ohm) each channel to ground (HVRET).

This feature is especially useful when leakage currents are not uniform between neighbor channels, having all channels shorted to the same potential prevents parasitic current flow between channels.

Leakage estimation(@room temperature): 50pA
1)Source Off leakage of ADG1414:
- max 150pA (table 1, page 3, ADG1414 datasheet)
- typical 50pA for 10/-10V input voltages (table 1, page 3, ADG1414 datasheet)
- based on curves for similar switches, the leakage for input voltages close to 0V should be less than that
2) Drain of MAX328 with one channel selected
- max 10pA (page 2, MAX328 datasheet)
- typ 3pA (page 2, MAX328 datasheet)

Capacitance estimation: 20pF
1) Source of ADG1414, 8pF@1MHz typical (table 1, page 3, ADG1414 datasheet)
2) Channel of MAX328: not specified explicitly, but one may estimate it to be around 10pF@1MHz

Copyright CERN 2019.

This documentation describes Open Hardware and is licensed under the CERN OHL v.1.2.

You may redistribute and modify this documentation under the terms of the CERN OHL v.1.2. (http://ohwr.org/CERNOHL). This documentation is distributed WITHOUT ANY EXPRESS OR IMPLIED WARRANTY, INCLUDING OF MERCHANTABILITY, SATISFACTORY QUALITY AND FITNESS FOR A PARTICULAR PURPOSE.
Please see the CERN OHL v.1.2 for applicable conditions.

Project/Equipment	HGC sensor probecard		
Document	**HGC sensor probecard 8 channels group**	Designer	Szymon Kulis
		Drawn by	Szymon Kulis 23/08/2016
		Check.by	JMW 21-10-2016
		Last Mod.	JMW 12/02/2019
		File	group8chn.SchDoc
		Print Date	14/03/2019 15:19:45
		Sheet	7.2.7 of 79
EP/ESE	*European Organization for Nuclear Research* *CH-1211 Genève 23 - Switzerland*	EDA-03518-V3-0	Size A4 Rev -

8 to 1 multiplexer.
if EN then D=S[A]

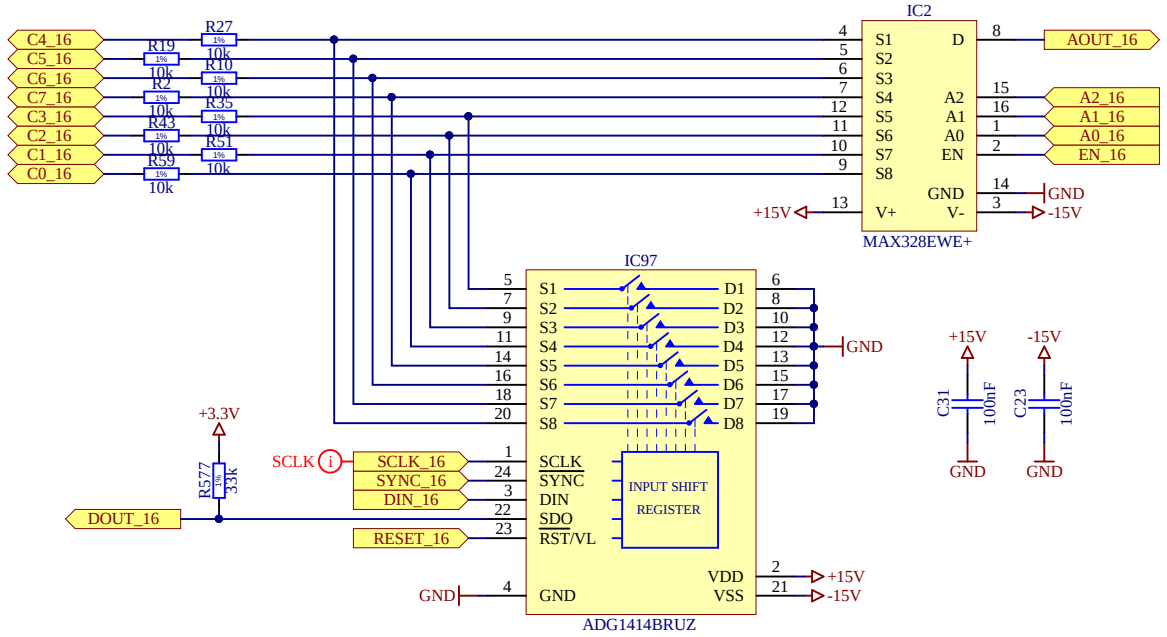

8 x SPST switch. The switches can be controlled independently.
Can be used to short (10 Ohm) each channel to ground (HVRET).

This feature is especially useful when leakage currents are not uniform between neighbor channels, having all channels shorted to the same potential prevents parasitic current flow between channels.

Leakage estimation(@room temperature): 50pA
1)Source Off leakage of ADG1414:
- max 150pA (table 1, page 3, ADG1414 datasheet)
- typical 50pA for 10/-10V input voltages (table 1, page 3, ADG1414 datasheet)
- based on curves for similar switches, the leakage for input voltages close to 0V should be less than that
2) Drain of MAX328 with one channel selected
- max 10pA (page 2, MAX328 datasheet)
- typ 3pA (page 2, MAX328 datasheet)

Capacitance estimation: 20pF
1) Source of ADG1414, 8pF@1MHz typical (table 1, page 3, ADG1414 datasheet)
2) Channel of MAX328: not specified explicitly, but one may estimate it to be around 10pF@1MHz

Copyright CERN 2019.

This documentation describes Open Hardware and is licensed under the CERN OHL v.1.2.

You may redistribute and modify this documentation under the terms of the CERN OHL v.1.2. (http://ohwr.org/CERNOHL). This documentation is distributed WITHOUT ANY EXPRESS OR IMPLIED WARRANTY, INCLUDING OF MERCHANTABILITY, SATISFACTORY QUALITY AND FITNESS FOR A PARTICULAR PURPOSE.
Please see the CERN OHL v.1.2 for applicable conditions.

Project/Equipment	HGC sensor probecard		
Document	**HGC sensor probecard 8 channels group**	Designer	Szymon Kulis
		Drawn by	Szymon Kulis 23/08/2016
		Check.by	JMW 21-10-2016
		Last Mod.	JMW 12/02/2019
		File	group8chn.SchDoc
		Print Date	14/03/2019 15:19:46

EP/ESE

European Organization for Nuclear Research
CH-1211 Genève 23 - Switzerland

EDA-03518-V3-0 | Size A4 | Rev -

8 to 1 multiplexer.
if EN then D=S[A]

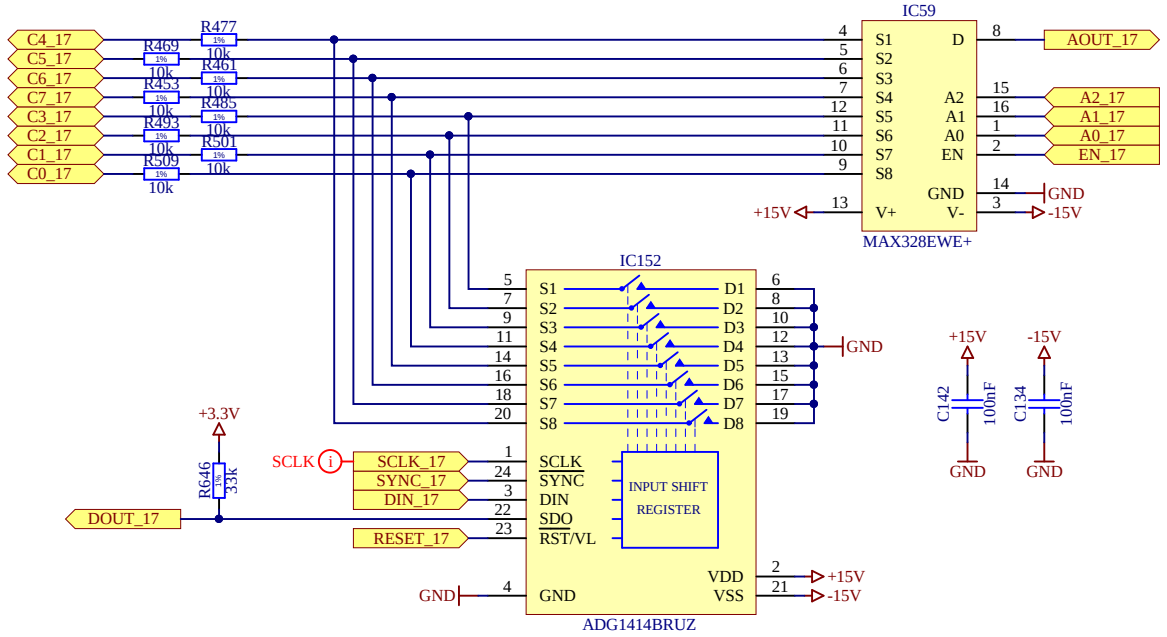

8 x SPST switch. The switches can be controlled independently.
Can be used to short (10 Ohm) each channel to ground (HVRET).

This feature is especially useful when leakage currents are not uniform between neighbor channels, having all channels shorted to the same potential prevents parasitic current flow between channels.

Leakage estimation(@room temperature): 50pA
1)Source Off leakage of ADG1414:
- max 150pA (table 1, page 3, ADG1414 datasheet)
- typical 50pA for 10/-10V input voltages (table 1, page 3, ADG1414 datasheet)
- based on curves for similar switches, the leakage for input voltages close to 0V should be less than that
2) Drain of MAX328 with one channel selected
- max 10pA (page 2, MAX328 datasheet)
- typ 3pA (page 2, MAX328 datasheet)

Capacitance estimation: 20pF
1) Source of ADG1414, 8pF@1MHz typical (table 1, page 3, ADG1414 datasheet)
2) Channel of MAX328: not specified explicitly, but one may estimate it to be around 10pF@1MHz

Copyright CERN 2019.

This documentation describes Open Hardware and is licensed under the CERN OHL v.1.2.

You may redistribute and modify this documentation under the terms of the CERN OHL v.1.2. (http://ohwr.org/CERNOHL). This documentation is distributed WITHOUT ANY EXPRESS OR IMPLIED WARRANTY, INCLUDING OF MERCHANTABILITY, SATISFACTORY QUALITY AND FITNESS FOR A PARTICULAR PURPOSE.
Please see the CERN OHL v.1.2 for applicable conditions.

Project/Equipment	HGC sensor probecard		
Document	**HGC sensor probecard 8 channels group**	Designer	Szymon Kulis
		Drawn by	Szymon Kulis 23/08/2016
		Check.by	JMW 21-10-2016
		Last Mod.	JMW 12/02/2019
		File	group8chn.SchDoc
		Print Date	14/03/2019 15:19:46

EP/ESE

European Organization for Nuclear Research
CH-1211 Genève 23 - Switzerland

EDA-03518-V3-0

Sheet 7.3.bf 79

Size A4 | Rev -

8 to 1 multiplexer.
if EN then D=S[A]

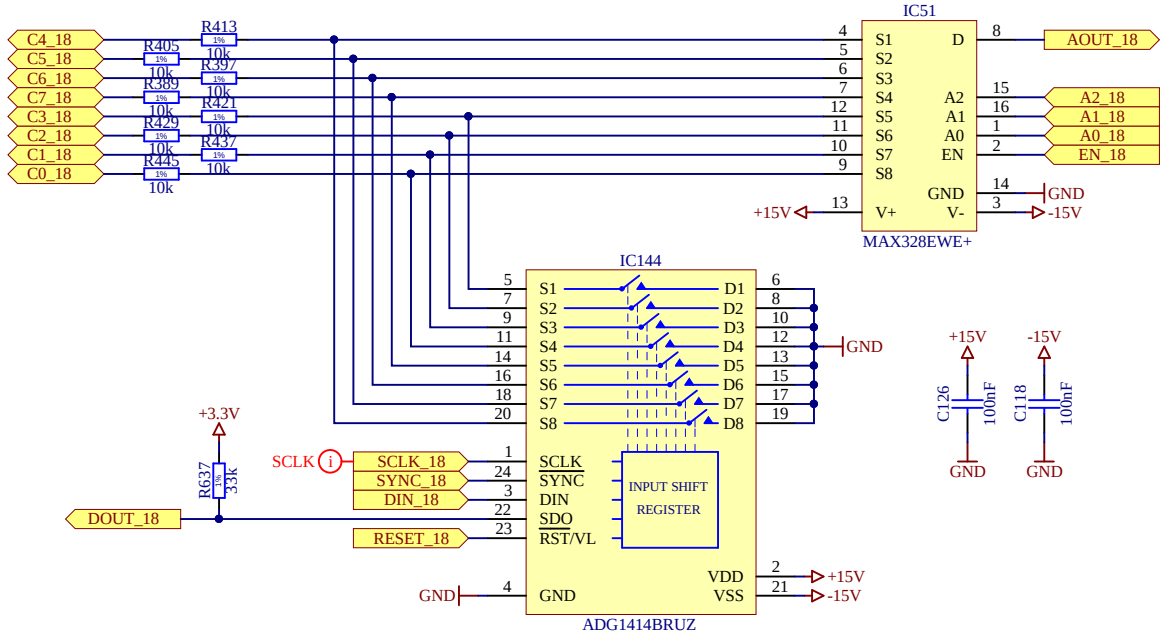

8 x SPST switch. The switches can be controlled independently.
Can be used to short (10 Ohm) each channel to ground (HVRET).

This feature is especially useful when leakage currents are not uniform between neighbor channels, having all channels shorted to the same potential prevents parasitic current flow between channels.

Leakage estimation(@room temperature): 50pA
1)Source Off leakage of ADG1414:
- max 150pA (table 1, page 3, ADG1414 datasheet)
- typical 50pA for 10/-10V input voltages (table 1, page 3, ADG1414 datasheet)
- based on curves for similar switches, the leakage for input voltages close to 0V should be less than that
2) Drain of MAX328 with one channel selected
- max 10pA (page 2, MAX328 datasheet)
- typ 3pA (page 2, MAX328 datasheet)

Capacitance estimation: 20pF
1) Source of ADG1414, 8pF@1MHz typical (table 1, page 3, ADG1414 datasheet)
2) Channel of MAX328: not specified explicitly, but one may estimate it to be around 10pF@1MHz

Copyright CERN 2019.

This documentation describes Open Hardware and is licensed under the CERN OHL v.1.2.

You may redistribute and modify this documentation under the terms of the CERN OHL v.1.2. (http://ohwr.org/CERNOHL). This documentation is distributed WITHOUT ANY EXPRESS OR IMPLIED WARRANTY, INCLUDING OF MERCHANTABILITY, SATISFACTORY QUALITY AND FITNESS FOR A PARTICULAR PURPOSE.
Please see the CERN OHL v.1.2 for applicable conditions.

Project/Equipment	HGC sensor probecard		
Document	**HGC sensor probecard 8 channels group**	Designer	Szymon Kulis
		Drawn by	Szymon Kulis 23/08/2016
		Check.by	JMW 21-10-2016
		Last Mod.	JMW 12/02/2019
		File	group8chn.SchDoc
		Print Date	14/03/2019 15:19:47

EP/ESE

European Organization for Nuclear Research
CH-1211 Genève 23 - Switzerland

EDA-03518-V3-0

Size A4 | Rev -

8 to 1 multiplexer.
if EN then D=S[A]

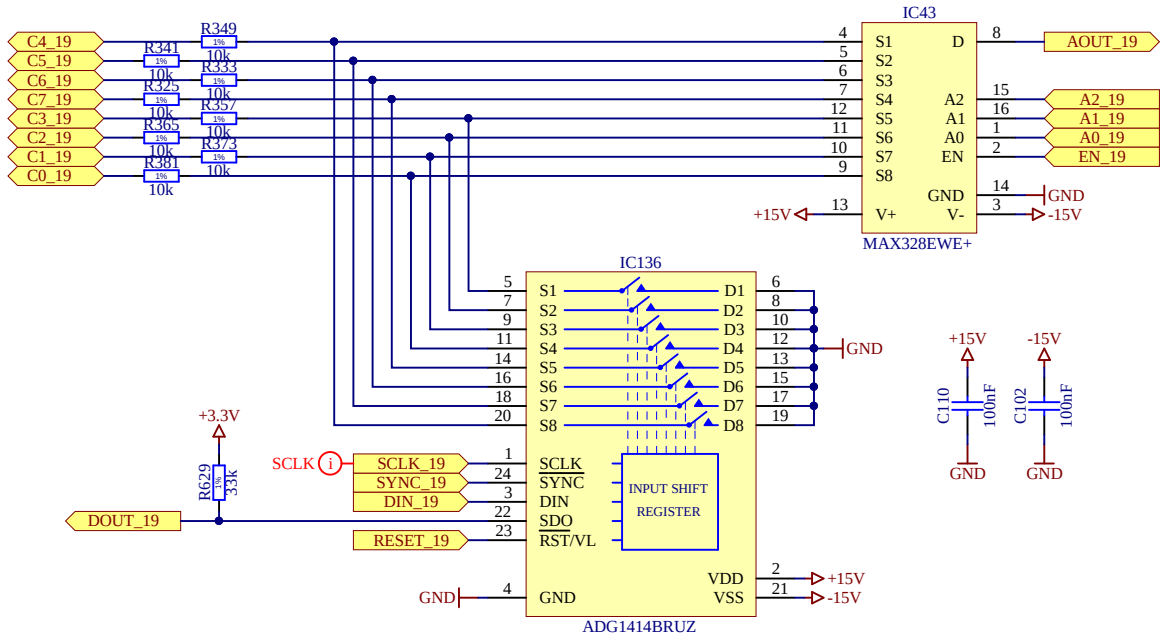

8 x SPST switch. The switches can be controlled independently.
Can be used to short (10 Ohm) each channel to ground (HVRET).

This feature is especially useful when leakage currents are not uniform between neighbor channels, having all channels shorted to the same potential prevents parasitic current flow between channels.

Leakage estimation(@room temperature): 50pA
1)Source Off leakage of ADG1414:
- max 150pA (table 1, page 3, ADG1414 datasheet)
- typical 50pA for 10/-10V input voltages (table 1, page 3, ADG1414 datasheet)
- based on curves for similar switches, the leakage for input voltages close to 0V should be less than that
2) Drain of MAX328 with one channel selected
- max 10pA (page 2, MAX328 datasheet)
- typ 3pA (page 2, MAX328 datasheet)

Capacitance estimation: 20pF
1) Source of ADG1414, 8pF@1MHz typical (table 1, page 3, ADG1414 datasheet)
2) Channel of MAX328: not specified explicitly, but one may estimate it to be around 10pF@1MHz

Copyright CERN 2019.

This documentation describes Open Hardware and is licensed under the CERN OHL v.1.2.

You may redistribute and modify this documentation under the terms of the CERN OHL v.1.2. (http://ohwr.org/CERNOHL). This documentation is distributed WITHOUT ANY EXPRESS OR IMPLIED WARRANTY, INCLUDING OF MERCHANTABILITY, SATISFACTORY QUALITY AND FITNESS FOR A PARTICULAR PURPOSE.
Please see the CERN OHL v.1.2 for applicable conditions.

Project/Equipment	HGC sensor probecard		
Document	**HGC sensor probecard 8 channels group**	Designer	Szymon Kulis
		Drawn by	Szymon Kulis 23/08/2016
		Check.by	JMW 21-10-2016
		Last Mod.	JMW 12/02/2019
		File	group8chn.SchDoc
		Print Date	14/03/2019 15:19:47

EP/ESE

European Organization for Nuclear Research
CH-1211 Genève 23 - Switzerland

EDA-03518-V3-0

Size A4 | Rev -

8 to 1 multiplexer.
if EN then D=S[A]

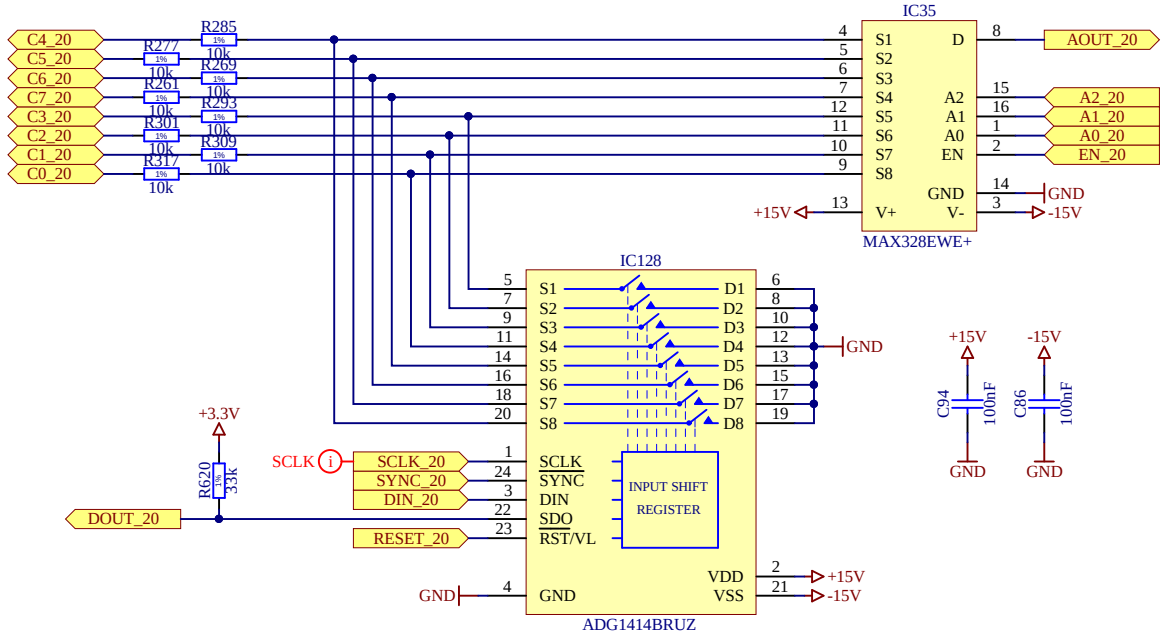

8 x SPST switch. The switches can be controlled independently.
Can be used to short (10 Ohm) each channel to ground (HVRET).

This feature is especially useful when leakage currents are not uniform between neighbor channels, having all channels shorted to the same potential prevents parasitic current flow between channels.

Leakage estimation(@room temperature): 50pA
1)Source Off leakage of ADG1414:
- max 150pA (table 1, page 3, ADG1414 datasheet)
- typical 50pA for 10/-10V input voltages (table 1, page 3, ADG1414 datasheet)
- based on curves for similar switches, the leakage for input voltages close to 0V should be less than that
2) Drain of MAX328 with one channel selected
- max 10pA (page 2, MAX328 datasheet)
- typ 3pA (page 2, MAX328 datasheet)

Capacitance estimation: 20pF
1) Source of ADG1414, 8pF@1MHz typical (table 1, page 3, ADG1414 datasheet)
2) Channel of MAX328: not specified explicitly, but one may estimate it to be around 10pF@1MHz

Copyright CERN 2019.

This documentation describes Open Hardware and is licensed under the CERN OHL v.1.2.

You may redistribute and modify this documentation under the terms of the CERN OHL v.1.2. (http://ohwr.org/CERNOHL). This documentation is distributed WITHOUT ANY EXPRESS OR IMPLIED WARRANTY, INCLUDING OF MERCHANTABILITY, SATISFACTORY QUALITY AND FITNESS FOR A PARTICULAR PURPOSE.
Please see the CERN OHL v.1.2 for applicable conditions.

Project/Equipment	HGC sensor probecard		
Document	**HGC sensor probecard 8 channels group**	Designer	Szymon Kulis
		Drawn by	Szymon Kulis 23/08/2016
		Check.by	JMW 21-10-2016
		Last Mod.	JMW 12/02/2019
		File	group8chn.SchDoc
		Print Date	14/03/2019 15:19:48

EP/ESE

European Organization for Nuclear Research
CH-1211 Genève 23 - Switzerland

EDA-03518-V3-0 | Size A4 | Rev -

8 to 1 multiplexer.
if EN then D=S[A]

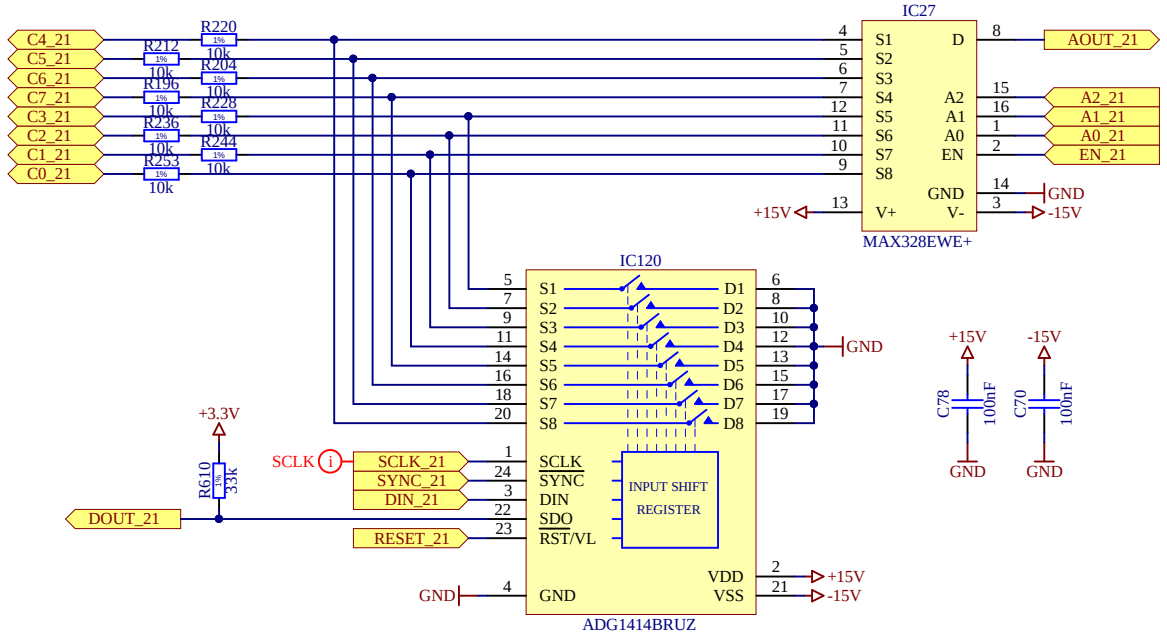

8 x SPST switch. The switches can be controlled independently.
Can be used to short (10 Ohm) each channel to ground (HVRET).

This feature is especially useful when leakage currents are not uniform between neighbor channels, having all channels shorted to the same potential prevents parasitic current flow between channels.

Copyright CERN 2019.

This documentation describes Open Hardware and is licensed under the CERN OHL v.1.2.

You may redistribute and modify this documentation under the terms of the CERN OHL v.1.2. (http://ohwr.org/CERNOHL). This documentation is distributed WITHOUT ANY EXPRESS OR IMPLIED WARRANTY, INCLUDING OF MERCHANTABILITY, SATISFACTORY QUALITY AND FITNESS FOR A PARTICULAR PURPOSE.
Please see the CERN OHL v.1.2 for applicable conditions.

Leakage estimation(@room temperature): 50pA
1)Source Off leakage of ADG1414:
- max 150pA (table 1, page 3, ADG1414 datasheet)
- typical 50pA for 10/-10V input voltages (table 1, page 3, ADG1414 datasheet)
- based on curves for similar switches, the leakage for input voltages close to 0V should be less than that
2) Drain of MAX328 with one channel selected
- max 10pA (page 2, MAX328 datasheet)
- typ 3pA (page 2, MAX328 datasheet)

Capacitance estimation: 20pF
1) Source of ADG1414, 8pF@1MHz typical (table 1, page 3, ADG1414 datasheet)
2) Channel of MAX328: not specified explicitly, but one may estimate it to be around 10pF@1MHz

Project/Equipment	HGC sensor probecard		
Document	**HGC sensor probecard 8 channels group**	Designer	Szymon Kulis
		Drawn by	Szymon Kulis 23/08/2016
		Check.by	JMW 21-10-2016
		Last Mod.	JMW 12/02/2019
		File	group8chn.SchDoc
		Print Date	14/03/2019 15:19:48
EP/ESE	*European Organization for Nuclear Research CH-1211 Genève 23 - Switzerland*	Sheet 7.3.5 of 79	
	EDA-03518-V3-0	Size A4	Rev -

8 to 1 multiplexer.
if EN then D=S[A]

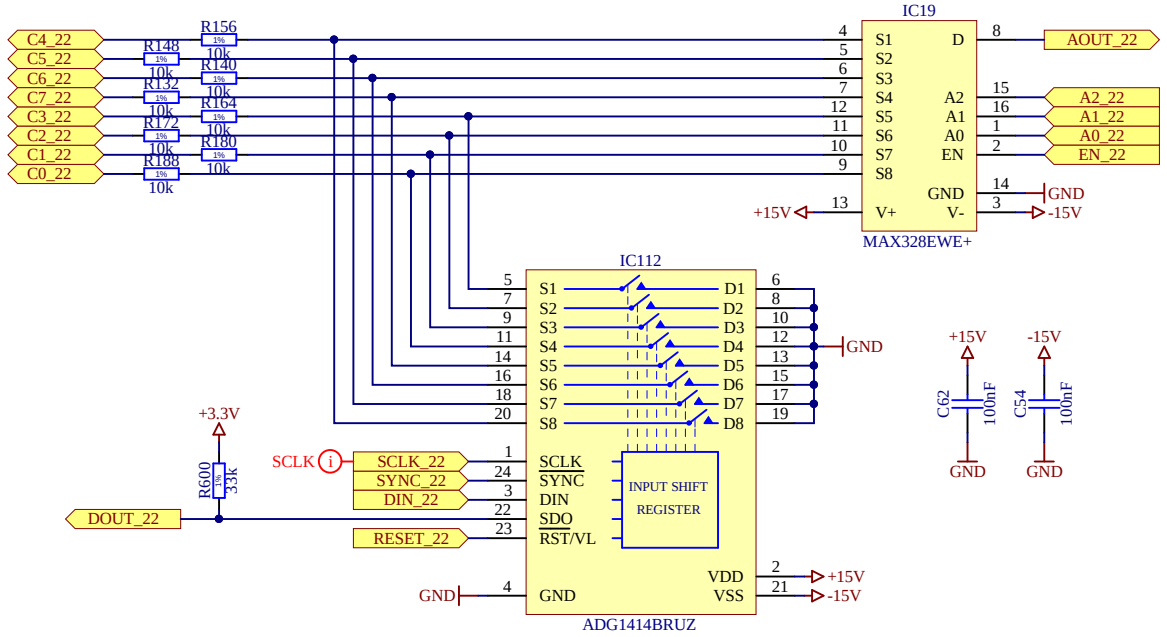

8 x SPST switch. The switches can be controlled independently.
Can be used to short (10 Ohm) each channel to ground (HVRET).

This feature is especially useful when leakage currents are not uniform between neighbor channels, having all channels shorted to the same potential prevents parasitic current flow between channels.

Leakage estimation(@room temperature): 50pA
1)Source Off leakage of ADG1414:
- max 150pA (table 1, page 3, ADG1414 datasheet)
- typical 50pA for 10/-10V input voltages (table 1, page 3, ADG1414 datasheet)
- based on curves for similar switches, the leakage for input voltages close to 0V should be less than that
2) Drain of MAX328 with one channel selected
- max 10pA (page 2, MAX328 datasheet)
- typ 3pA (page 2, MAX328 datasheet)

Capacitance estimation: 20pF
1) Source of ADG1414, 8pF@1MHz typical (table 1, page 3, ADG1414 datasheet)
2) Channel of MAX328: not specified explicitly, but one may estimate it to be around 10pF@1MHz

Copyright CERN 2019.

This documentation describes Open Hardware and is licensed under the CERN OHL v.1.2.

You may redistribute and modify this documentation under the terms of the CERN OHL v.1.2. (http://ohwr.org/CERNOHL). This documentation is distributed WITHOUT ANY EXPRESS OR IMPLIED WARRANTY, INCLUDING OF MERCHANTABILITY, SATISFACTORY QUALITY AND FITNESS FOR A PARTICULAR PURPOSE.
Please see the CERN OHL v.1.2 for applicable conditions.

Project/Equipment	HGC sensor probecard		
Document	**HGC sensor probecard 8 channels group**	Designer	Szymon Kulis
		Drawn by	Szymon Kulis 23/08/2016
		Check.by	JMW 21-10-2016
		Last Mod.	JMW 12/02/2019
		File	group8chn.SchDoc
		Print Date	14/03/2019 15:19:49
		Sheet	7.3.6 of 79
EP/ESE	*European Organization for Nuclear Research* *CH-1211 Genève 23 - Switzerland*	EDA-03518-V3-0	Size A4 Rev -

8 to 1 multiplexer.
if EN then D=S[A]

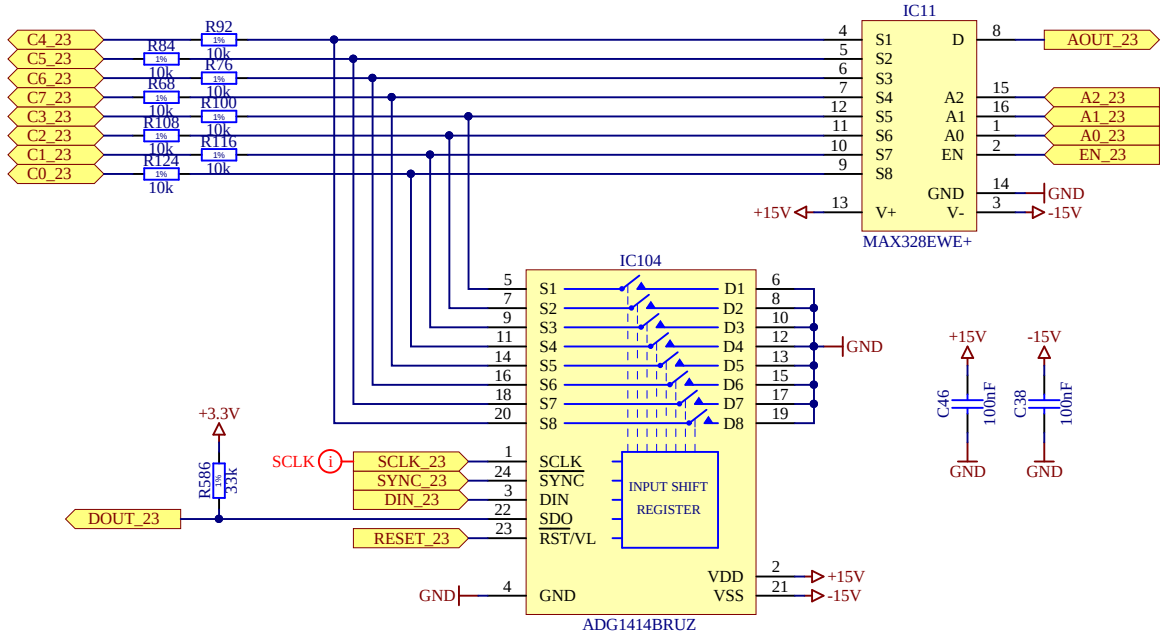

8 x SPST switch. The switches can be controlled independently.
Can be used to short (10 Ohm) each channel to ground (HVRET).

This feature is especially useful when leakage currents are not uniform between neighbor channels, having all channels shorted to the same potential prevents parasitic current flow between channels.

Copyright CERN 2019.

This documentation describes Open Hardware and is licensed under the CERN OHL v.1.2.

You may redistribute and modify this documentation under the terms of the CERN OHL v.1.2. (http://ohwr.org/CERNOHL). This documentation is distributed WITHOUT ANY EXPRESS OR IMPLIED WARRANTY, INCLUDING OF MERCHANTABILITY, SATISFACTORY QUALITY AND FITNESS FOR A PARTICULAR PURPOSE.
Please see the CERN OHL v.1.2 for applicable conditions.

Leakage estimation(@room temperature): 50pA
1)Source Off leakage of ADG1414:
- max 150pA (table 1, page 3, ADG1414 datasheet)
- typical 50pA for 10/-10V input voltages (table 1, page 3, ADG1414 datasheet)
- based on curves for similar switches, the leakage for input voltages close to 0V should be less than that
2) Drain of MAX328 with one channel selected
- max 10pA (page 2, MAX328 datasheet)
- typ 3pA (page 2, MAX328 datasheet)

Capacitance estimation: 20pF
1) Source of ADG1414, 8pF@1MHz typical (table 1, page 3, ADG1414 datasheet)
2) Channel of MAX328: not specified explicitly, but one may estimate it to be around 10pF@1MHz

Project/Equipment	HGC sensor probecard		
Document	**HGC sensor probecard 8 channels group**	Designer	Szymon Kulis
		Drawn by	Szymon Kulis 23/08/2016
		Check.by	JMW 21-10-2016
		Last Mod.	JMW 12/02/2019
		File	group8chn.SchDoc
		Print Date	14/03/2019 15:19:49
EP/ESE	*European Organization for Nuclear Research* *CH-1211 Genève 23 - Switzerland*	Sheet	7.3.7 of 79
	EDA-03518-V3-0	Size	A4
		Rev	-

8 to 1 multiplexer.
if EN then D=S[A]

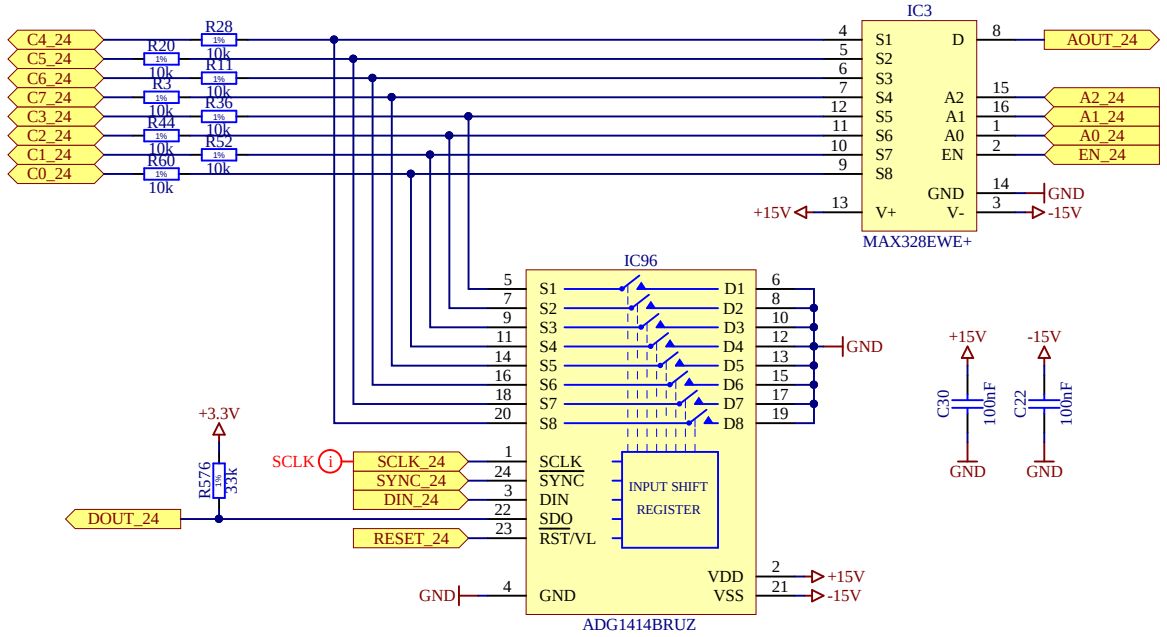

8 x SPST switch. The switches can be controlled independently.
Can be used to short (10 Ohm) each channel to ground (HVRET).

This feature is especially useful when leakage currents are not uniform between neighbor channels, having all channels shorted to the same potential prevents parasitic current flow between channels.

Copyright CERN 2019.

This documentation describes Open Hardware and is licensed under the CERN OHL v.1.2.

You may redistribute and modify this documentation under the terms of the CERN OHL v.1.2. (http://ohwr.org/CERNOHL). This documentation is distributed WITHOUT ANY EXPRESS OR IMPLIED WARRANTY, INCLUDING OF MERCHANTABILITY, SATISFACTORY QUALITY AND FITNESS FOR A PARTICULAR PURPOSE.
Please see the CERN OHL v.1.2 for applicable conditions.

Leakage estimation(@room temperature): 50pA
1)Source Off leakage of ADG1414:
- max 150pA (table 1, page 3, ADG1414 datasheet)
- typical 50pA for 10/-10V input voltages (table 1, page 3, ADG1414 datasheet)
- based on curves for similar switches, the leakage for input voltages close to 0V should be less than that
2) Drain of MAX328 with one channel selected
- max 10pA (page 2, MAX328 datasheet)
- typ 3pA (page 2, MAX328 datasheet)

Capacitance estimation: 20pF
1) Source of ADG1414, 8pF@1MHz typical (table 1, page 3, ADG1414 datasheet)
2) Channel of MAX328: not specified explicitly, but one may estimate it to be around 10pF@1MHz

Project/Equipment	HGC sensor probecard		
Document	**HGC sensor probecard 8 channels group**	Designer	Szymon Kulis
		Drawn by	Szymon Kulis 23/08/2016
		Check.by	JMW 21-10-2016
		Last Mod.	JMW 12/02/2019
		File	group8chn.SchDoc
		Print Date	14/03/2019 15:19:50
EP/ESE	*European Organization for Nuclear Research* *CH-1211 Genève 23 - Switzerland*	Sheet 7.3.8 of 79	
	EDA-03518-V3-0	Size A4	Rev -

8 to 1 multiplexer.
if EN then D=S[A]

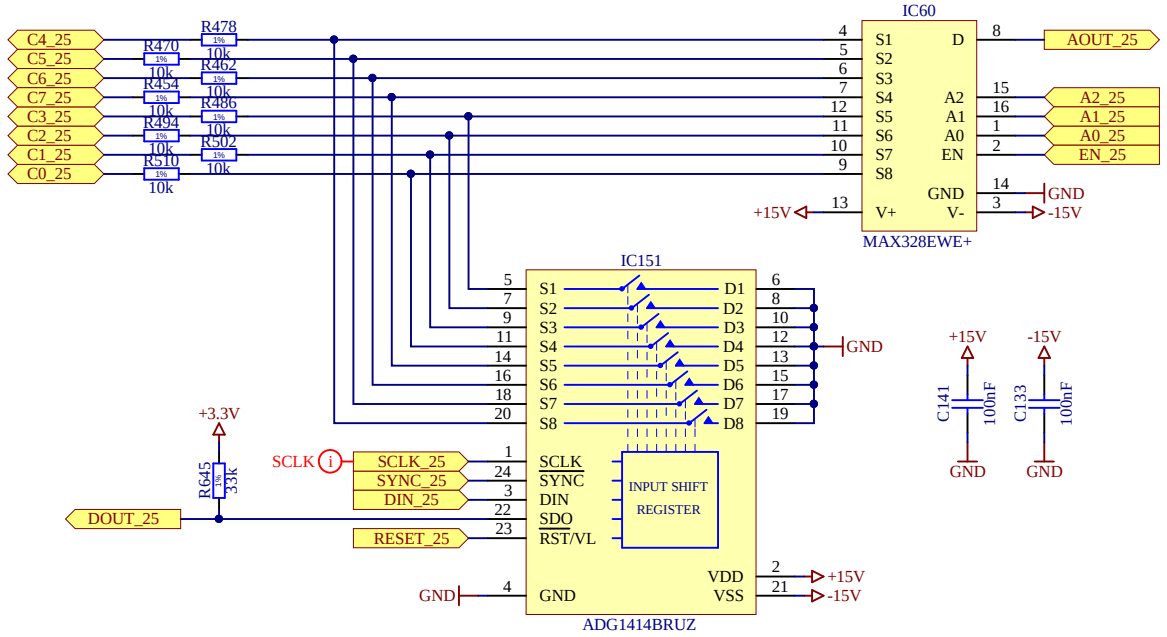

8 x SPST switch. The switches can be controlled independently.
Can be used to short (10 Ohm) each channel to ground (HVRET).

This feature is especially useful when leakage currents are not uniform between neighbor channels, having all channels shorted to the same potential prevents parasitic current flow between channels.

Leakage estimation(@room temperature): 50pA
1)Source Off leakage of ADG1414:
- max 150pA (table 1, page 3, ADG1414 datasheet)
- typical 50pA for 10/-10V input voltages (table 1, page 3, ADG1414 datasheet)
- based on curves for similar switches, the leakage for input voltages close to 0V should be less than that
2) Drain of MAX328 with one channel selected
- max 10pA (page 2, MAX328 datasheet)
- typ 3pA (page 2, MAX328 datasheet)

Capacitance estimation: 20pF
1) Source of ADG1414, 8pF@1MHz typical (table 1, page 3, ADG1414 datasheet)
2) Channel of MAX328: not specified explicitly, but one may estimate it to be around 10pF@1MHz

Copyright CERN 2019.

This documentation describes Open Hardware and is licensed under the CERN OHL v.1.2.

You may redistribute and modify this documentation under the terms of the CERN OHL v.1.2. (http://ohwr.org/CERNOHL). This documentation is distributed WITHOUT ANY EXPRESS OR IMPLIED WARRANTY, INCLUDING OF MERCHANTABILITY, SATISFACTORY QUALITY AND FITNESS FOR A PARTICULAR PURPOSE.
Please see the CERN OHL v.1.2 for applicable conditions.

Project/Equipment	HGC sensor probecard		
Document	**HGC sensor probecard 8 channels group**	Designer	Szymon Kulis
		Drawn by	Szymon Kulis 23/08/2016
		Check.by	JMW 21-10-2016
		Last Mod.	JMW 12/02/2019
		File	group8chn.SchDoc
		Print Date	14/03/2019 15:19:50

EP/ESE

European Organization for Nuclear Research
CH-1211 Genève 23 - Switzerland

EDA-03518-V3-0

Size A4 | Rev -

8 to 1 multiplexer.
if EN then D=S[A]

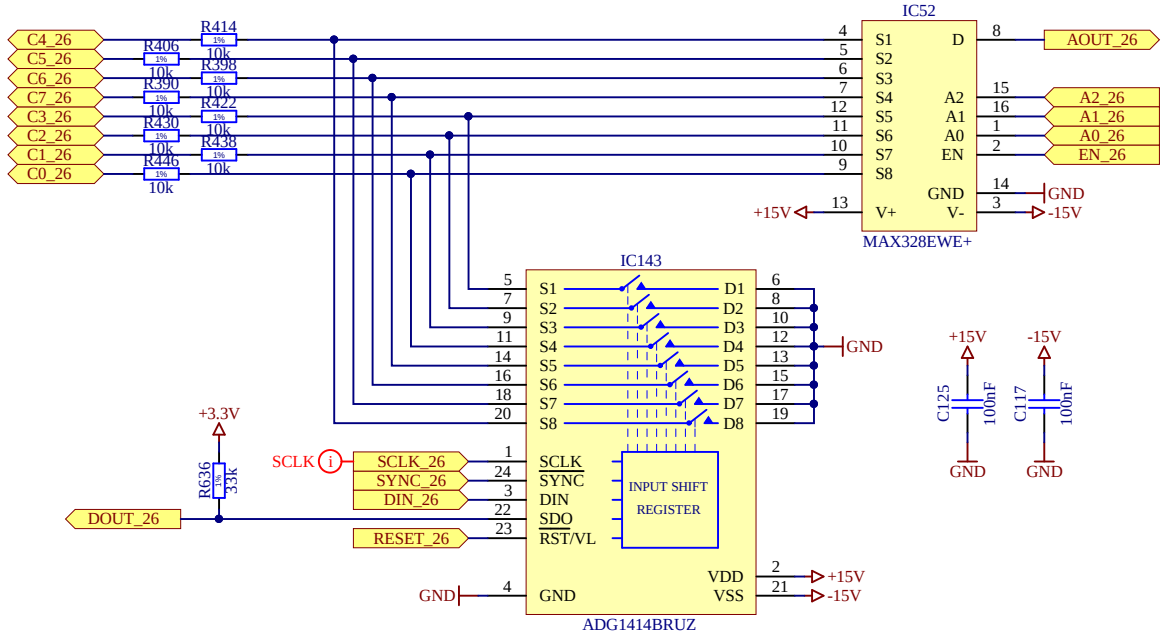

8 x SPST switch. The switches can be controlled independently.
Can be used to short (10 Ohm) each channel to ground (HVRET).

This feature is especially useful when leakage currents are not uniform between neighbor channels, having all channels shorted to the same potential prevents parasitic current flow between channels.

Leakage estimation(@room temperature): 50pA
1)Source Off leakage of ADG1414:
- max 150pA (table 1, page 3, ADG1414 datasheet)
- typical 50pA for 10/-10V input voltages (table 1, page 3, ADG1414 datasheet)
- based on curves for similar switches, the leakage for input voltages close to 0V should be less than that
2) Drain of MAX328 with one channel selected
- max 10pA (page 2, MAX328 datasheet)
- typ 3pA (page 2, MAX328 datasheet)

Capacitance estimation: 20pF
1) Source of ADG1414, 8pF@1MHz typical (table 1, page 3, ADG1414 datasheet)
2) Channel of MAX328: not specified explicitly, but one may estimate it to be around 10pF@1MHz

Copyright CERN 2019.

This documentation describes Open Hardware and is licensed under the CERN OHL v.1.2.

You may redistribute and modify this documentation under the terms of the CERN OHL v.1.2. (http://ohwr.org/CERNOHL). This documentation is distributed WITHOUT ANY EXPRESS OR IMPLIED WARRANTY, INCLUDING OF MERCHANTABILITY, SATISFACTORY QUALITY AND FITNESS FOR A PARTICULAR PURPOSE.
Please see the CERN OHL v.1.2 for applicable conditions.

Project/Equipment	HGC sensor probecard		
Document	**HGC sensor probecard 8 channels group**	Designer	Szymon Kulis
		Drawn by	Szymon Kulis 23/08/2016
		Check.by	JMW 21-10-2016
		Last Mod.	JMW 12/02/2019
		File	group8chn.SchDoc
		Print Date	14/03/2019 15:19:51

EP/ESE

European Organization for Nuclear Research
CH-1211 Genève 23 - Switzerland

EDA-03518-V3-0

Size A4 | Rev -

8 to 1 multiplexer.
if EN then D=S[A]

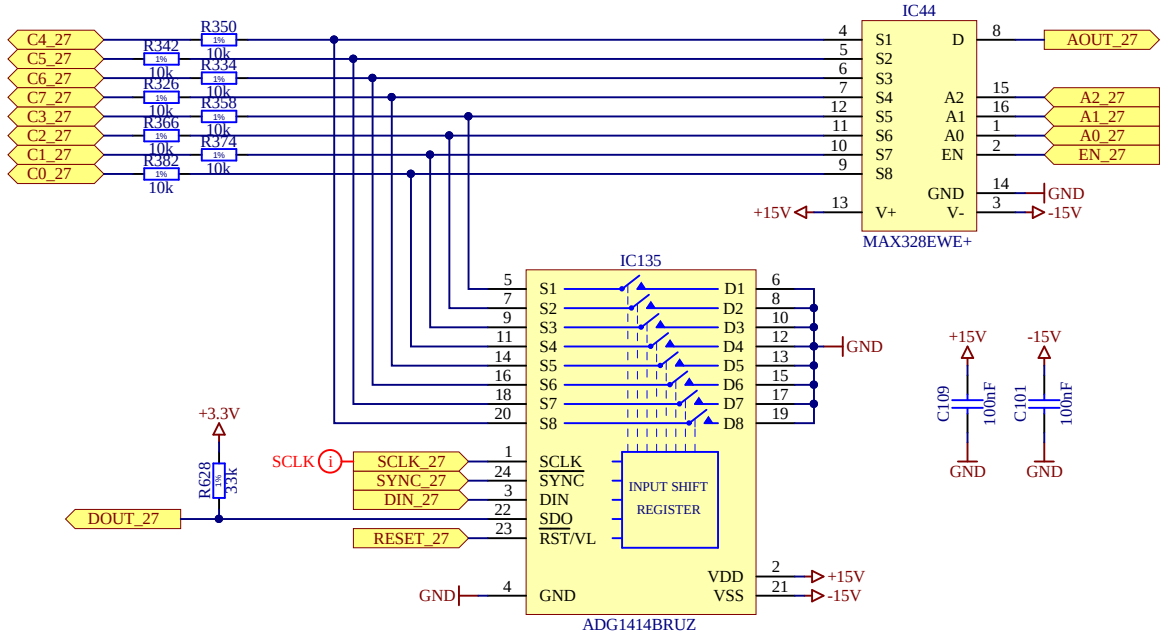

8 x SPST switch. The switches can be controlled independently.
Can be used to short (10 Ohm) each channel to ground (HVRET).

This feature is especially useful when leakage currents are not uniform between neighbor channels, having all channels shorted to the same potential prevents parasitic current flow between channels.

Leakage estimation(@room temperature): 50pA
1)Source Off leakage of ADG1414:
- max 150pA (table 1, page 3, ADG1414 datasheet)
- typical 50pA for 10/-10V input voltages (table 1, page 3, ADG1414 datasheet)
- based on curves for similar switches, the leakage for input voltages close to 0V should be less than that
2) Drain of MAX328 with one channel selected
- max 10pA (page 2, MAX328 datasheet)
- typ 3pA (page 2, MAX328 datasheet)

Capacitance estimation: 20pF
1) Source of ADG1414, 8pF@1MHz typical (table 1, page 3, ADG1414 datasheet)
2) Channel of MAX328: not specified explicitly, but one may estimate it to be around 10pF@1MHz

Copyright CERN 2019.

This documentation describes Open Hardware and is licensed under the CERN OHL v.1.2.

You may redistribute and modify this documentation under the terms of the CERN OHL v.1.2. (http://ohwr.org/CERNOHL). This documentation is distributed WITHOUT ANY EXPRESS OR IMPLIED WARRANTY, INCLUDING OF MERCHANTABILITY, SATISFACTORY QUALITY AND FITNESS FOR A PARTICULAR PURPOSE.
Please see the CERN OHL v.1.2 for applicable conditions.

Project/Equipment	HGC sensor probecard		
Document	**HGC sensor probecard 8 channels group**	Designer	Szymon Kulis
		Drawn by	Szymon Kulis 23/08/2016
		Check.by	JMW 21-10-2016
		Last Mod.	JMW 12/02/2019
		File	group8chn.SchDoc
		Print Date	14/03/2019 15:19:51

EP/ESE

European Organization for Nuclear Research
CH-1211 Genève 23 - Switzerland

EDA-03518-V3-0

Size A4 | Rev -

8 to 1 multiplexer.
if EN then D=S[A]

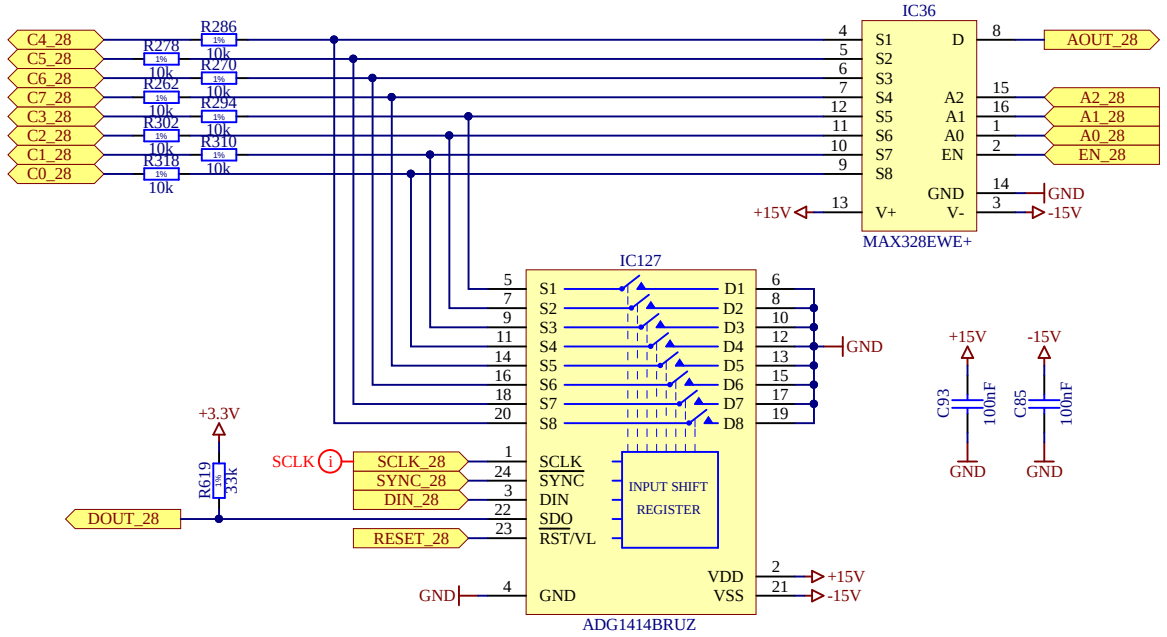

8 x SPST switch. The switches can be controlled independently.
Can be used to short (10 Ohm) each channel to ground (HVRET).

This feature is especially useful when leakage currents are not uniform between neighbor channels, having all channels shorted to the same potential prevents parasitic current flow between channels.

Leakage estimation(@room temperature): 50pA
1)Source Off leakage of ADG1414:
- max 150pA (table 1, page 3, ADG1414 datasheet)
- typical 50pA for 10/-10V input voltages (table 1, page 3, ADG1414 datasheet)
- based on curves for similar switches, the leakage for input voltages close to 0V should be less than that
2) Drain of MAX328 with one channel selected
- max 10pA (page 2, MAX328 datasheet)
- typ 3pA (page 2, MAX328 datasheet)

Capacitance estimation: 20pF
1) Source of ADG1414, 8pF@1MHz typical (table 1, page 3, ADG1414 datasheet)
2) Channel of MAX328: not specified explicitly, but one may estimate it to be around 10pF@1MHz

Copyright CERN 2019.

This documentation describes Open Hardware and is licensed under the CERN OHL v.1.2.

You may redistribute and modify this documentation under the terms of the CERN OHL v.1.2. (http://ohwr.org/CERNOHL). This documentation is distributed WITHOUT ANY EXPRESS OR IMPLIED WARRANTY, INCLUDING OF MERCHANTABILITY, SATISFACTORY QUALITY AND FITNESS FOR A PARTICULAR PURPOSE.
Please see the CERN OHL v.1.2 for applicable conditions.

Project/Equipment	HGC sensor probecard		
Document	**HGC sensor probecard 8 channels group**	Designer	Szymon Kulis
		Drawn by	Szymon Kulis 23/08/2016
		Check.by	JMW 21-10-2016
		Last Mod.	JMW 12/02/2019
		File	group8chn.SchDoc
		Print Date	14/03/2019 15:19:52

EP/ESE

European Organization for Nuclear Research
CH-1211 Genève 23 - Switzerland

EDA-03518-V3-0 | Size A4 | Rev -

8 to 1 multiplexer.
if EN then D=S[A]

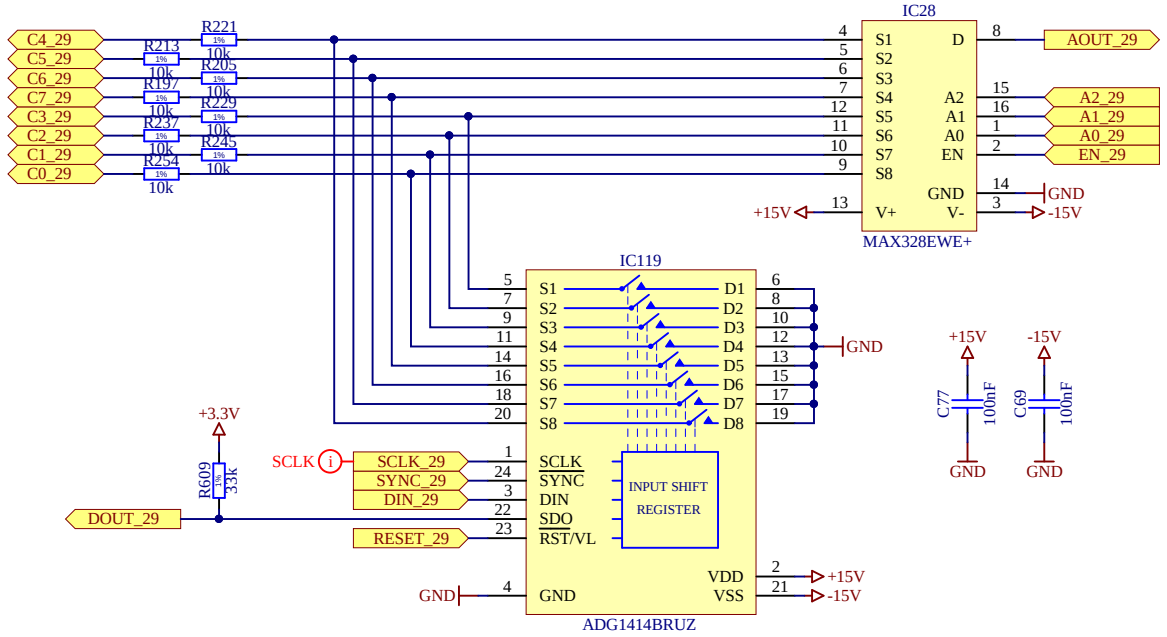

8 x SPST switch. The switches can be controlled independently.
Can be used to short (10 Ohm) each channel to ground (HVRET).

This feature is especially useful when leakage currents are not uniform between neighbor channels, having all channels shorted to the same potential prevents parasitic current flow between channels.

Copyright CERN 2019.

This documentation describes Open Hardware and is licensed under the CERN OHL v.1.2.

You may redistribute and modify this documentation under the terms of the CERN OHL v.1.2. (http://ohwr.org/CERNOHL). This documentation is distributed WITHOUT ANY EXPRESS OR IMPLIED WARRANTY, INCLUDING OF MERCHANTABILITY, SATISFACTORY QUALITY AND FITNESS FOR A PARTICULAR PURPOSE.
Please see the CERN OHL v.1.2 for applicable conditions.

Leakage estimation(@room temperature): 50pA
1)Source Off leakage of ADG1414:
- max 150pA (table 1, page 3, ADG1414 datasheet)
- typical 50pA for 10/-10V input voltages (table 1, page 3, ADG1414 datasheet)
- based on curves for similar switches, the leakage for input voltages close to 0V should be less than that
2) Drain of MAX328 with one channel selected
- max 10pA (page 2, MAX328 datasheet)
- typ 3pA (page 2, MAX328 datasheet)

Capacitance estimation: 20pF
1) Source of ADG1414, 8pF@1MHz typical (table 1, page 3, ADG1414 datasheet)
2) Channel of MAX328: not specified explicitly, but one may estimate it to be around 10pF@1MHz

Project/Equipment	HGC sensor probecard		
Document	**HGC sensor probecard 8 channels group**	Designer	Szymon Kulis
		Drawn by	Szymon Kulis 23/08/2016
		Check.by	JMW 21-10-2016
		Last Mod.	JMW 12/02/2019
		File	group8chn.SchDoc
		Print Date	14/03/2019 15:19:52
		Sheet	7.4.5 of 79
EP/ESE	*European Organization for Nuclear Research CH-1211 Genève 23 - Switzerland*	EDA-03518-V3-0	Size A4 Rev -

8 to 1 multiplexer.
if EN then D=S[A]

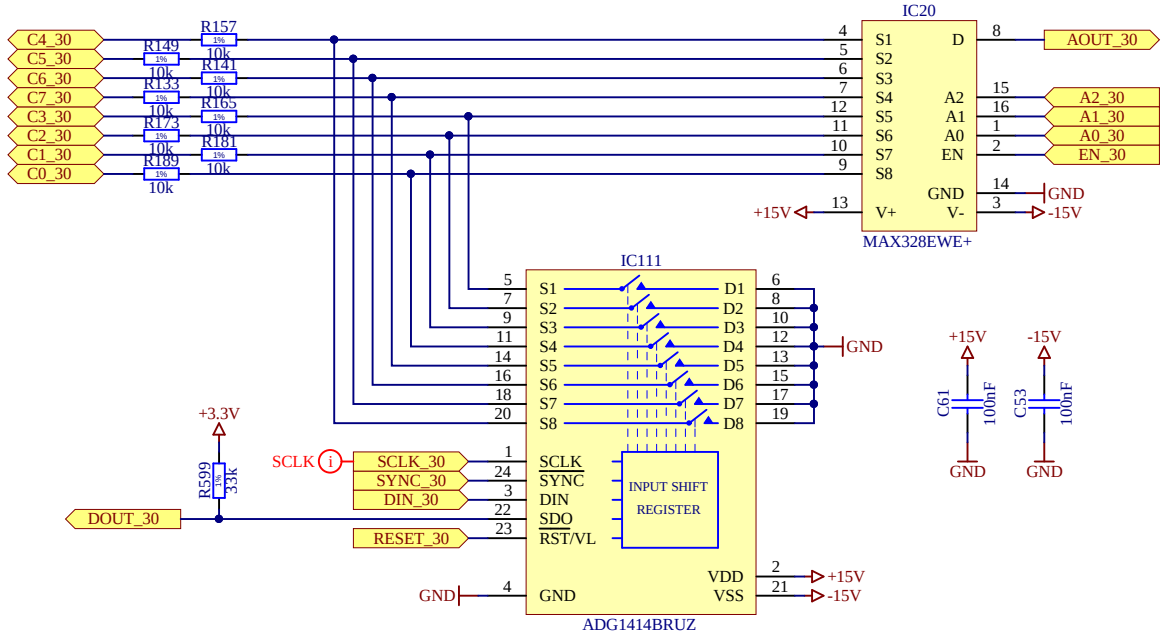

8 x SPST switch. The switches can be controlled independently.
Can be used to short (10 Ohm) each channel to ground (HVRET).

This feature is especially useful when leakage currents are not uniform between neighbor channels, having all channels shorted to the same potential prevents parasitic current flow between channels.

Leakage estimation(@room temperature): 50pA
1)Source Off leakage of ADG1414:
- max 150pA (table 1, page 3, ADG1414 datasheet)
- typical 50pA for 10/-10V input voltages (table 1, page 3, ADG1414 datasheet)
- based on curves for similar switches, the leakage for input voltages close to 0V should be less than that
2) Drain of MAX328 with one channel selected
- max 10pA (page 2, MAX328 datasheet)
- typ 3pA (page 2, MAX328 datasheet)

Capacitance estimation: 20pF
1) Source of ADG1414, 8pF@1MHz typical (table 1, page 3, ADG1414 datasheet)
2) Channel of MAX328: not specified explicitly, but one may estimate it to be around 10pF@1MHz

Copyright CERN 2019.

This documentation describes Open Hardware and is licensed under the CERN OHL v.1.2.

You may redistribute and modify this documentation under the terms of the CERN OHL v.1.2. (http://ohwr.org/CERNOHL). This documentation is distributed WITHOUT ANY EXPRESS OR IMPLIED WARRANTY, INCLUDING OF MERCHANTABILITY, SATISFACTORY QUALITY AND FITNESS FOR A PARTICULAR PURPOSE.
Please see the CERN OHL v.1.2 for applicable conditions.

Project/Equipment	HGC sensor probecard		
Document	**HGC sensor probecard 8 channels group**	Designer	Szymon Kulis
		Drawn by	Szymon Kulis 23/08/2016
		Check.by	JMW 21-10-2016
		Last Mod.	JMW 12/02/2019
		File	group8chn.SchDoc
		Print Date	14/03/2019 15:19:53

EP/ESE

European Organization for Nuclear Research
CH-1211 Genève 23 - Switzerland

EDA-03518-V3-0 | Size A4 | Rev -

8 to 1 multiplexer.
if EN then D=S[A]

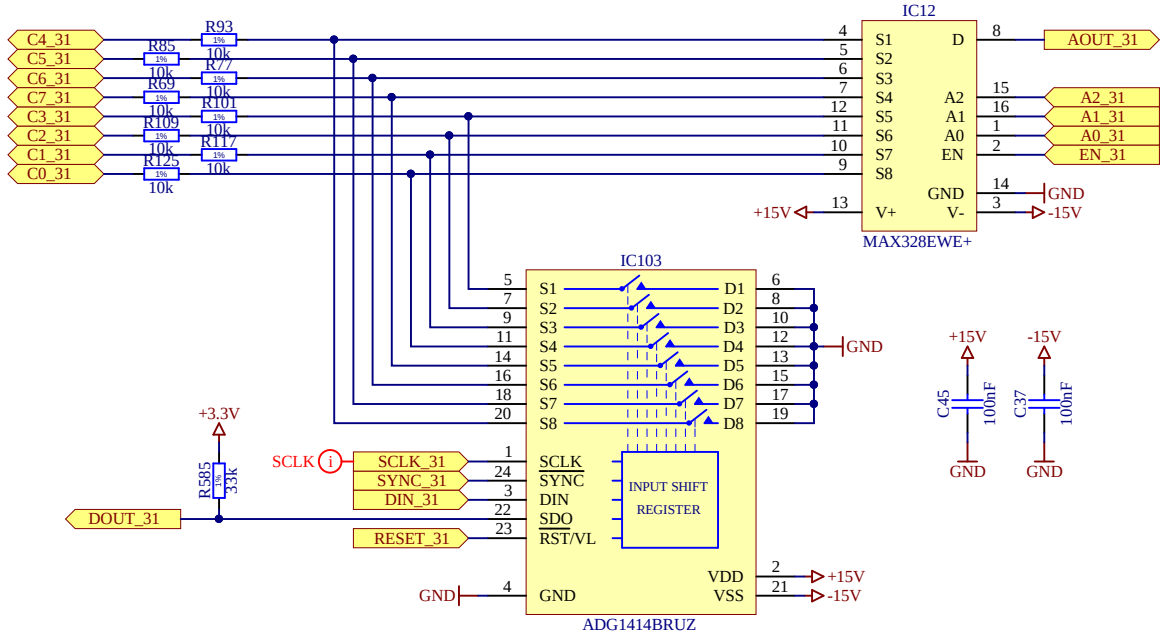

8 x SPST switch. The switches can be controlled independently.
Can be used to short (10 Ohm) each channel to ground (HVRET).

This feature is especially useful when leakage currents are not uniform between neighbor channels, having all channels shorted to the same potential prevents parasitic current flow between channels.

Copyright CERN 2019.

This documentation describes Open Hardware and is licensed under the CERN OHL v.1.2.

You may redistribute and modify this documentation under the terms of the CERN OHL v.1.2. (http://ohwr.org/CERNOHL). This documentation is distributed WITHOUT ANY EXPRESS OR IMPLIED WARRANTY, INCLUDING OF MERCHANTABILITY, SATISFACTORY QUALITY AND FITNESS FOR A PARTICULAR PURPOSE.
Please see the CERN OHL v.1.2 for applicable conditions.

Leakage estimation(@room temperature): 50pA
1)Source Off leakage of ADG1414:
- max 150pA (table 1, page 3, ADG1414 datasheet)
- typical 50pA for 10/-10V input voltages (table 1, page 3, ADG1414 datasheet)
- based on curves for similar switches, the leakage for input voltages close to 0V should be less than that
2) Drain of MAX328 with one channel selected
- max 10pA (page 2, MAX328 datasheet)
- typ 3pA (page 2, MAX328 datasheet)

Capacitance estimation: 20pF
1) Source of ADG1414, 8pF@1MHz typical (table 1, page 3, ADG1414 datasheet)
2) Channel of MAX328: not specified explicitly, but one may estimate it to be around 10pF@1MHz

Project/Equipment	HGC sensor probecard		
Document	**HGC sensor probecard 8 channels group**	Designer	Szymon Kulis
		Drawn by	Szymon Kulis 23/08/2016
		Check.by	JMW 21-10-2016
		Last Mod.	JMW 12/02/2019
		File	group8chn.SchDoc
		Print Date	14/03/2019 15:19:53
EP/ESE	*European Organization for Nuclear Research CH-1211 Genève 23 - Switzerland*	Sheet	7.4.7 of 79
	EDA-03518-V3-0	Size	A4
		Rev	-

8 to 1 multiplexer.
if EN then D=S[A]

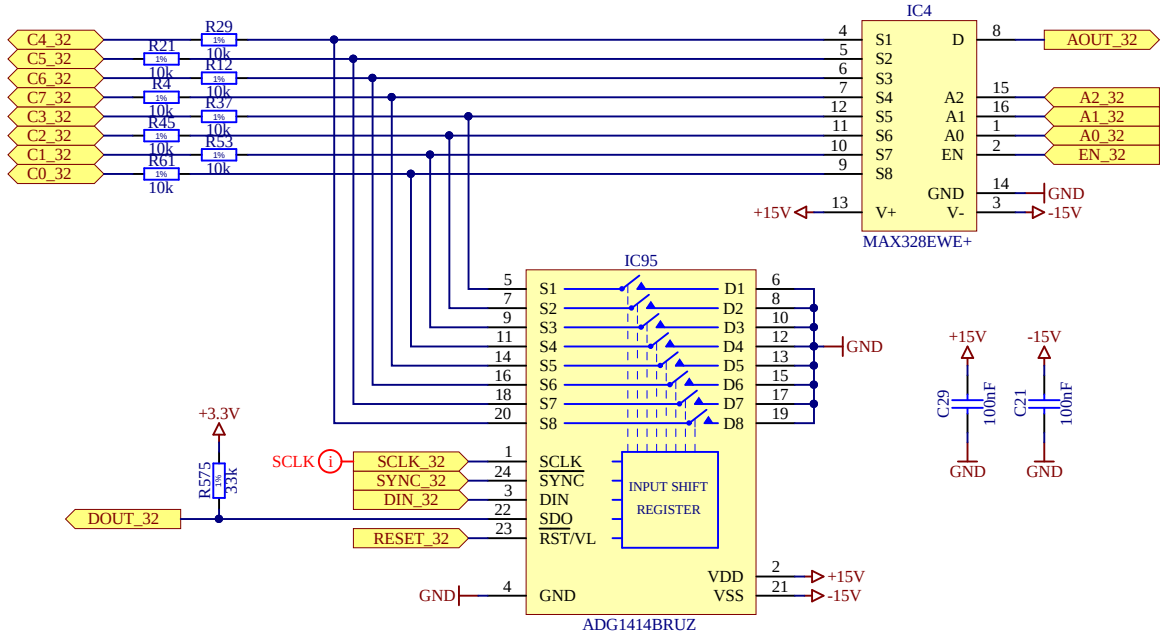

8 x SPST switch. The switches can be controlled independently.
Can be used to short (10 Ohm) each channel to ground (HVRET).

This feature is especially useful when leakage currents are not uniform between neighbor channels, having all channels shorted to the same potential prevents parasitic current flow between channels.

Leakage estimation(@room temperature): 50pA
1)Source Off leakage of ADG1414:
- max 150pA (table 1, page 3, ADG1414 datasheet)
- typical 50pA for 10/-10V input voltages (table 1, page 3, ADG1414 datasheet)
- based on curves for similar switches, the leakage for input voltages close to 0V should be less than that
2) Drain of MAX328 with one channel selected
- max 10pA (page 2, MAX328 datasheet)
- typ 3pA (page 2, MAX328 datasheet)

Capacitance estimation: 20pF
1) Source of ADG1414, 8pF@1MHz typical (table 1, page 3, ADG1414 datasheet)
2) Channel of MAX328: not specified explicitly, but one may estimate it to be around 10pF@1MHz

Copyright CERN 2019.

This documentation describes Open Hardware and is licensed under the CERN OHL v.1.2.

You may redistribute and modify this documentation under the terms of the CERN OHL v.1.2. (http://ohwr.org/CERNOHL). This documentation is distributed WITHOUT ANY EXPRESS OR IMPLIED WARRANTY, INCLUDING OF MERCHANTABILITY, SATISFACTORY QUALITY AND FITNESS FOR A PARTICULAR PURPOSE.
Please see the CERN OHL v.1.2 for applicable conditions.

Project/Equipment	HGC sensor probecard		
Document	**HGC sensor probecard 8 channels group**	Designer	Szymon Kulis
		Drawn by	Szymon Kulis 23/08/2016
		Check.by	JMW 21-10-2016
		Last Mod.	JMW 12/02/2019
		File	group8chn.SchDoc
		Print Date	14/03/2019 15:19:54

EP/ESE

European Organization for Nuclear Research
CH-1211 Genève 23 - Switzerland

EDA-03518-V3-0

Size A4 | Rev -

8 to 1 multiplexer.
if EN then D=S[A]

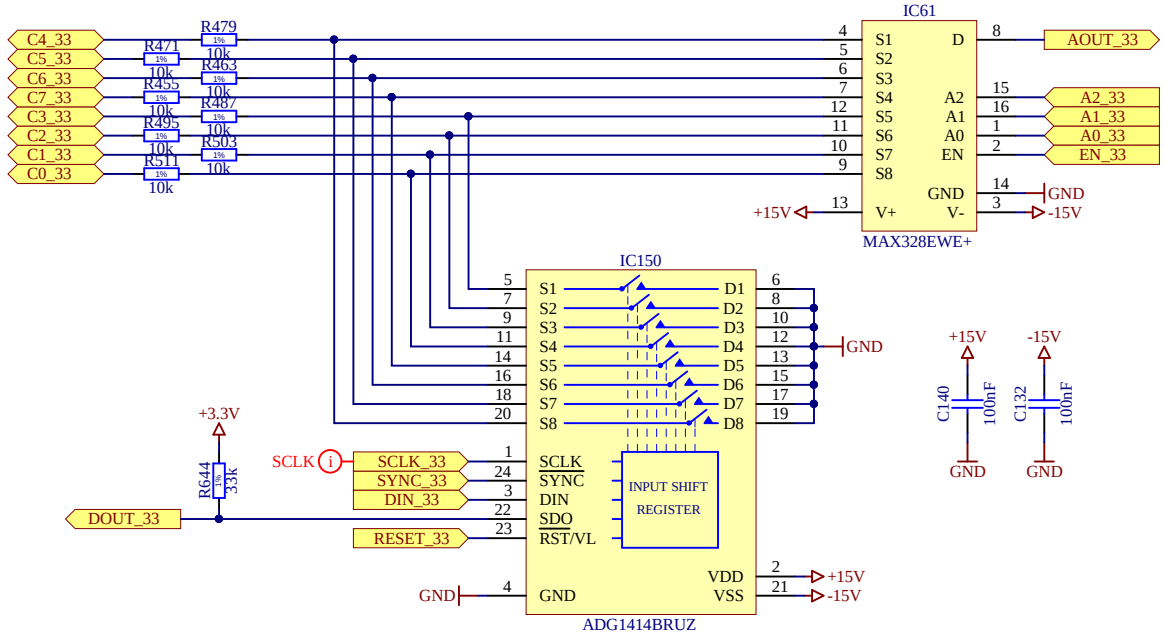

8 x SPST switch. The switches can be controlled independently.
Can be used to short (10 Ohm) each channel to ground (HVRET).

This feature is especially useful when leakage currents are not uniform between neighbor channels, having all channels shorted to the same potential prevents parasitic current flow between channels.

Leakage estimation(@room temperature): 50pA
1)Source Off leakage of ADG1414:
- max 150pA (table 1, page 3, ADG1414 datasheet)
- typical 50pA for 10/-10V input voltages (table 1, page 3, ADG1414 datasheet)
- based on curves for similar switches, the leakage for input voltages close to 0V should be less than that
2) Drain of MAX328 with one channel selected
- max 10pA (page 2, MAX328 datasheet)
- typ 3pA (page 2, MAX328 datasheet)

Capacitance estimation: 20pF
1) Source of ADG1414, 8pF@1MHz typical (table 1, page 3, ADG1414 datasheet)
2) Channel of MAX328: not specified explicitly, but one may estimate it to be around 10pF@1MHz

Copyright CERN 2019.

This documentation describes Open Hardware and is licensed under the CERN OHL v.1.2.

You may redistribute and modify this documentation under the terms of the CERN OHL v.1.2. (http://ohwr.org/CERNOHL). This documentation is distributed WITHOUT ANY EXPRESS OR IMPLIED WARRANTY, INCLUDING OF MERCHANTABILITY, SATISFACTORY QUALITY AND FITNESS FOR A PARTICULAR PURPOSE.
Please see the CERN OHL v.1.2 for applicable conditions.

Project/Equipment	HGC sensor probecard		
Document	**HGC sensor probecard 8 channels group**	Designer	Szymon Kulis
		Drawn by	Szymon Kulis 23/08/2016
		Check.by	JMW 21-10-2016
		Last Mod.	JMW 12/02/2019
		File	group8chn.SchDoc
		Print Date	14/03/2019 15:19:54 Sheet 7.5.1 of 79
EP/ESE CERN	European Organization for Nuclear Research CH-1211 Genève 23 - Switzerland	EDA-03518-V3-0	Size A4 Rev -

8 to 1 multiplexer.
if EN then D=S[A]

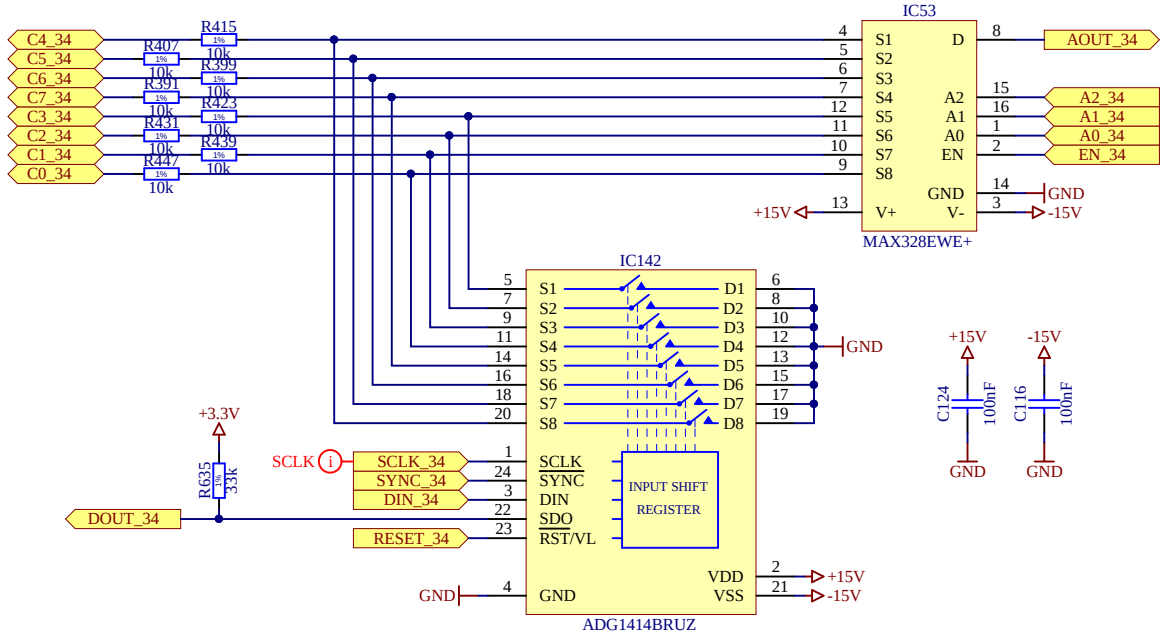

ADG1414BRUZ

8 x SPST switch. The switches can be controlled independently.
Can be used to short (10 Ohm) each channel to ground (HVRET).

This feature is especially useful when leakage currents are not uniform between neighbor channels, having all channels shorted to the same potential prevents parasitic current flow between channels.

Leakage estimation(@room temperature): 50pA
1)Source Off leakage of ADG1414:
- max 150pA (table 1, page 3, ADG1414 datasheet)
- typical 50pA for 10/-10V input voltages (table 1, page 3, ADG1414 datasheet)
- based on curves for similar switches, the leakage for input voltages close to 0V should be less than that
2) Drain of MAX328 with one channel selected
- max 10pA (page 2, MAX328 datasheet)
- typ 3pA (page 2, MAX328 datasheet)

Capacitance estimation: 20pF
1) Source of ADG1414, 8pF@1MHz typical (table 1, page 3, ADG1414 datasheet)
2) Channel of MAX328: not specified explicitly, but one may estimate it to be around 10pF@1MHz

Copyright CERN 2019.

This documentation describes Open Hardware and is licensed under the CERN OHL v.1.2.

You may redistribute and modify this documentation under the terms of the CERN OHL v.1.2. (http://ohwr.org/CERNOHL). This documentation is distributed WITHOUT ANY EXPRESS OR IMPLIED WARRANTY, INCLUDING OF MERCHANTABILITY, SATISFACTORY QUALITY AND FITNESS FOR A PARTICULAR PURPOSE.
Please see the CERN OHL v.1.2 for applicable conditions.

Project/Equipment	HGC sensor probecard		
Document	**HGC sensor probecard 8 channels group**	Designer	Szymon Kulis
		Drawn by	Szymon Kulis 23/08/2016
		Check.by	JMW 21-10-2016
		Last Mod.	JMW 12/02/2019
		File	group8chn.SchDoc
		Print Date	14/03/2019 15:19:55

EP/ESE

European Organization for Nuclear Research
CH-1211 Genève 23 - Switzerland

EDA-03518-V3-0

Size A4 | Rev -

8 to 1 multiplexer.
if EN then D=S[A]

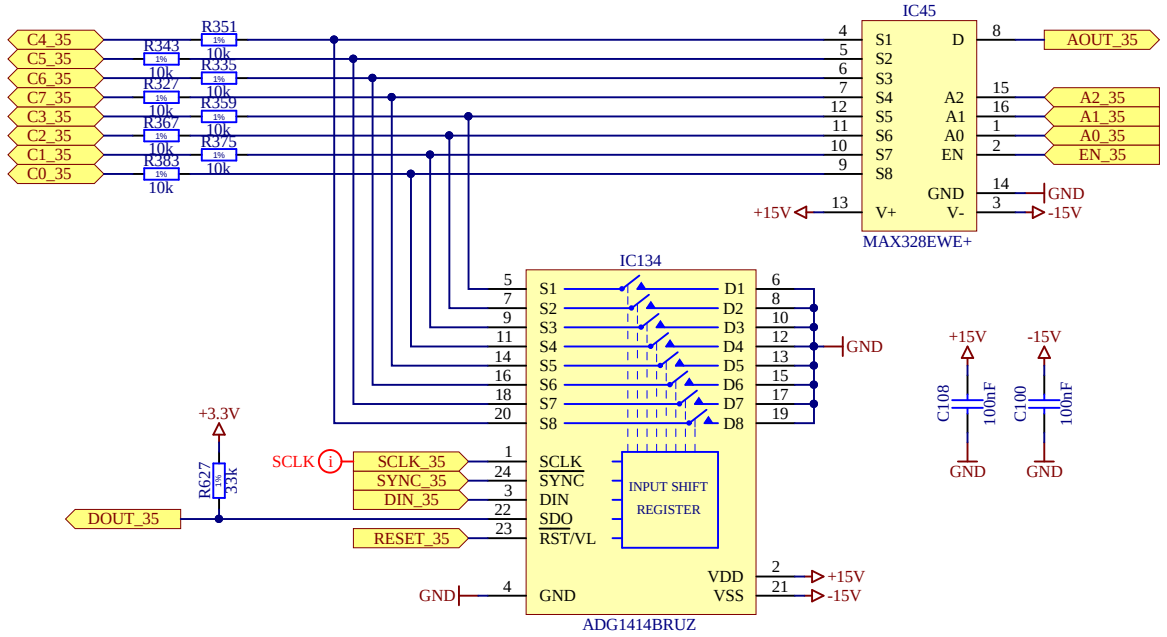

8 x SPST switch. The switches can be controlled independently.
Can be used to short (10 Ohm) each channel to ground (HVRET).

This feature is especially useful when leakage currents are not uniform between neighbor channels, having all channels shorted to the same potential prevents parasitic current flow between channels.

Leakage estimation(@room temperature): 50pA
1)Source Off leakage of ADG1414:
- max 150pA (table 1, page 3, ADG1414 datasheet)
- typical 50pA for 10/-10V input voltages (table 1, page 3, ADG1414 datasheet)
- based on curves for similar switches, the leakage for input voltages close to 0V should be less than that
2) Drain of MAX328 with one channel selected
- max 10pA (page 2, MAX328 datasheet)
- typ 3pA (page 2, MAX328 datasheet)

Capacitance estimation: 20pF
1) Source of ADG1414, 8pF@1MHz typical (table 1, page 3, ADG1414 datasheet)
2) Channel of MAX328: not specified explicitly, but one may estimate it to be around 10pF@1MHz

Copyright CERN 2019.

This documentation describes Open Hardware and is licensed under the CERN OHL v.1.2.

You may redistribute and modify this documentation under the terms of the CERN OHL v.1.2. (http://ohwr.org/CERNOHL). This documentation is distributed WITHOUT ANY EXPRESS OR IMPLIED WARRANTY, INCLUDING OF MERCHANTABILITY, SATISFACTORY QUALITY AND FITNESS FOR A PARTICULAR PURPOSE.
Please see the CERN OHL v.1.2 for applicable conditions.

Project/Equipment	HGC sensor probecard		
Document	**HGC sensor probecard 8 channels group**	Designer	Szymon Kulis
		Drawn by	Szymon Kulis 23/08/2016
		Check.by	JMW 21-10-2016
		Last Mod.	JMW 12/02/2019
		File	group8chn.SchDoc
		Print Date	14/03/2019 15:19:55

EP/ESE

European Organization for Nuclear Research
CH-1211 Genève 23 - Switzerland

EDA-03518-V3-0

Size A4 | Rev -

8 to 1 multiplexer.
if EN then D=S[A]

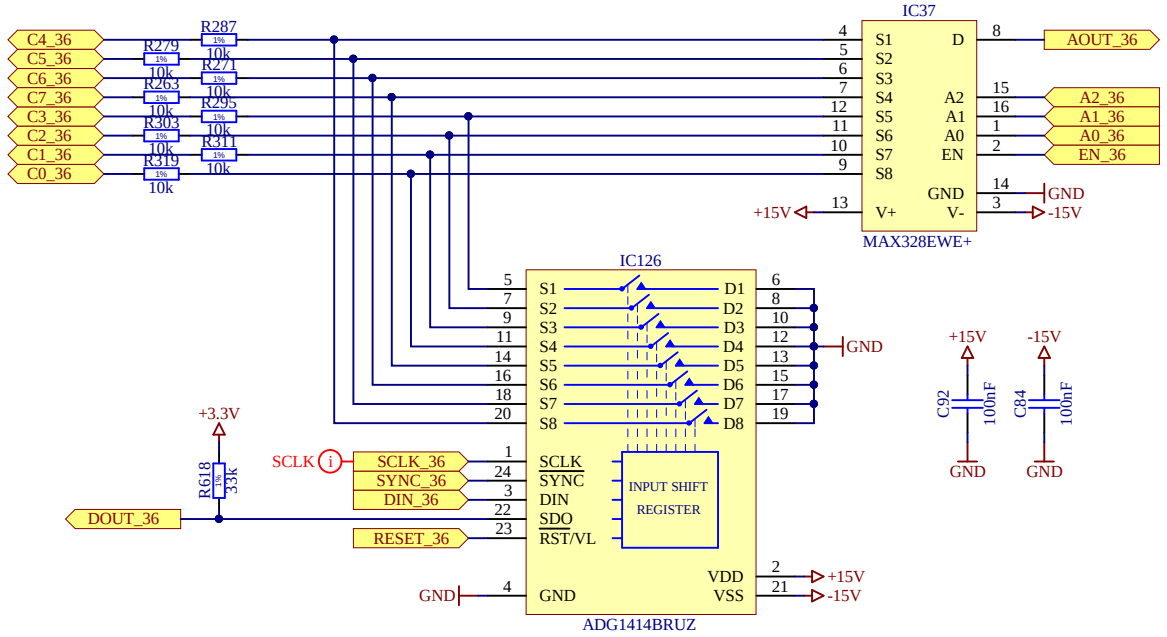

8 x SPST switch. The switches can be controlled independently.
Can be used to short (10 Ohm) each channel to ground (HVRET).

This feature is especially useful when leakage currents are not uniform between neighbor channels, having all channels shorted to the same potential prevents parasitic current flow between channels.

Leakage estimation(@room temperature): 50pA
1)Source Off leakage of ADG1414:
- max 150pA (table 1, page 3, ADG1414 datasheet)
- typical 50pA for 10/-10V input voltages (table 1, page 3, ADG1414 datasheet)
- based on curves for similar switches, the leakage for input voltages close to 0V should be less than that
2) Drain of MAX328 with one channel selected
- max 10pA (page 2, MAX328 datasheet)
- typ 3pA (page 2, MAX328 datasheet)

Capacitance estimation: 20pF
1) Source of ADG1414, 8pF@1MHz typical (table 1, page 3, ADG1414 datasheet)
2) Channel of MAX328: not specified explicitly, but one may estimate it to be around 10pF@1MHz

Copyright CERN 2019.

This documentation describes Open Hardware and is licensed under the CERN OHL v.1.2.

You may redistribute and modify this documentation under the terms of the CERN OHL v.1.2. (http://ohwr.org/CERNOHL). This documentation is distributed WITHOUT ANY EXPRESS OR IMPLIED WARRANTY, INCLUDING OF MERCHANTABILITY, SATISFACTORY QUALITY AND FITNESS FOR A PARTICULAR PURPOSE.
Please see the CERN OHL v.1.2 for applicable conditions.

Project/Equipment	HGC sensor probecard		
Document	**HGC sensor probecard 8 channels group**	Designer	Szymon Kulis
		Drawn by	Szymon Kulis 23/08/2016
		Check.by	JMW 21-10-2016
		Last Mod.	JMW 12/02/2019
		File	group8chn.SchDoc
		Print Date	14/03/2019 15:19:56

EP/ESE

European Organization for Nuclear Research
CH-1211 Genève 23 - Switzerland

EDA-03518-V3-0 | Size A4 | Rev -

8 to 1 multiplexer.
if EN then D=S[A]

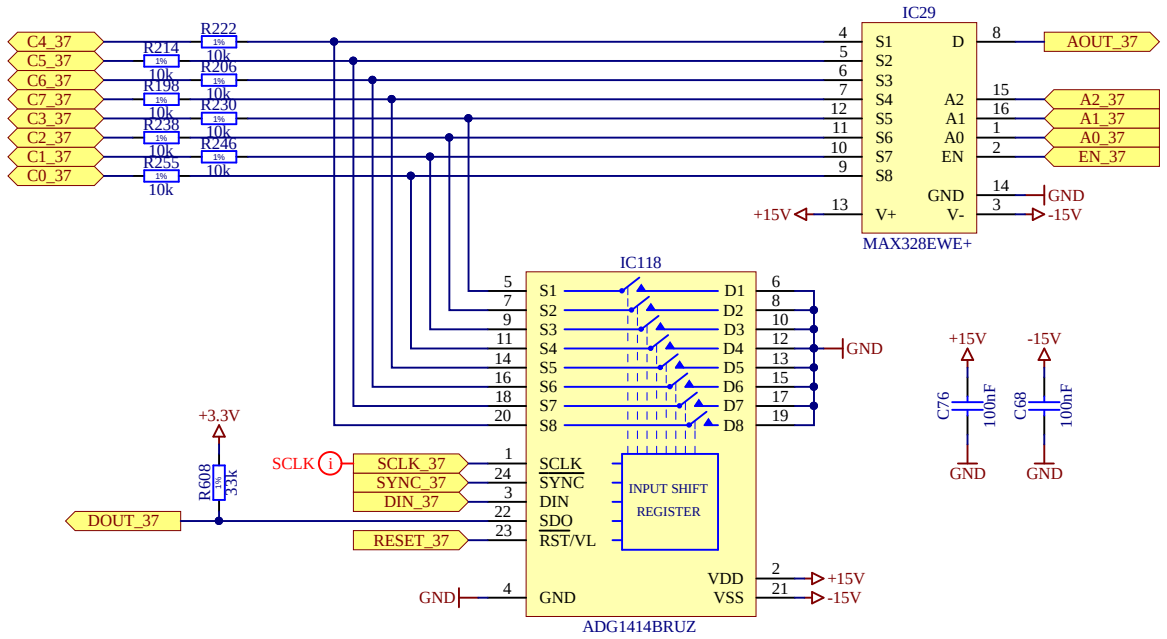

8 x SPST switch. The switches can be controlled independently.
Can be used to short (10 Ohm) each channel to ground (HVRET).

This feature is especially useful when leakage currents are not uniform between neighbor channels, having all channels shorted to the same potential prevents parasitic current flow between channels.

Leakage estimation(@room temperature): 50pA
1)Source Off leakage of ADG1414:
- max 150pA (table 1, page 3, ADG1414 datasheet)
- typical 50pA for 10/-10V input voltages (table 1, page 3, ADG1414 datasheet)
- based on curves for similar switches, the leakage for input voltages close to 0V should be less than that
2) Drain of MAX328 with one channel selected
- max 10pA (page 2, MAX328 datasheet)
- typ 3pA (page 2, MAX328 datasheet)

Capacitance estimation: 20pF
1) Source of ADG1414, 8pF@1MHz typical (table 1, page 3, ADG1414 datasheet)
2) Channel of MAX328: not specified explicitly, but one may estimate it to be around 10pF@1MHz

Copyright CERN 2019.

This documentation describes Open Hardware and is licensed under the CERN OHL v.1.2.

You may redistribute and modify this documentation under the terms of the CERN OHL v.1.2. (http://ohwr.org/CERNOHL). This documentation is distributed WITHOUT ANY EXPRESS OR IMPLIED WARRANTY, INCLUDING OF MERCHANTABILITY, SATISFACTORY QUALITY AND FITNESS FOR A PARTICULAR PURPOSE.
Please see the CERN OHL v.1.2 for applicable conditions.

Project/Equipment	HGC sensor probecard		
Document	**HGC sensor probecard 8 channels group**	Designer	Szymon Kulis
		Drawn by	Szymon Kulis 23/08/2016
		Check.by	JMW 21-10-2016
		Last Mod.	JMW 12/02/2019
		File	group8chn.SchDoc
		Print Date	14/03/2019 15:19:56

EP/ESE

European Organization for Nuclear Research
CH-1211 Genève 23 - Switzerland

EDA-03518-V3-0

Size A4 | Rev -

8 to 1 multiplexer.
if EN then D=S[A]

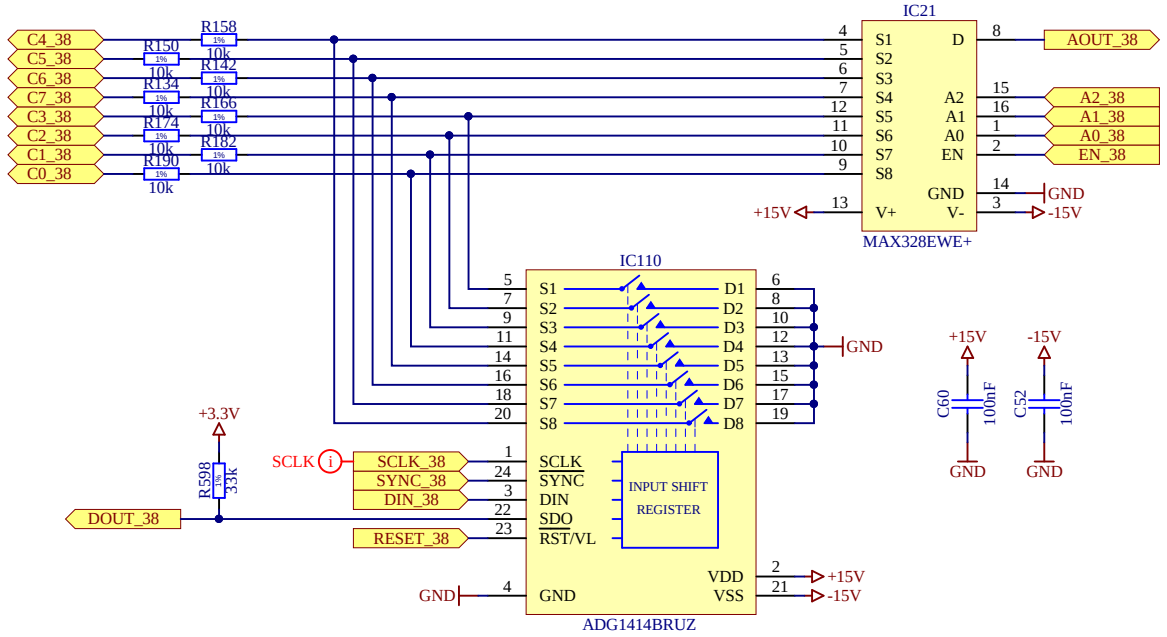

8 x SPST switch. The switches can be controlled independently.
Can be used to short (10 Ohm) each channel to ground (HVRET).

This feature is especially useful when leakage currents are not uniform between neighbor channels, having all channels shorted to the same potential prevents parasitic current flow between channels.

Leakage estimation(@room temperature): 50pA
1)Source Off leakage of ADG1414:
- max 150pA (table 1, page 3, ADG1414 datasheet)
- typical 50pA for 10/-10V input voltages (table 1, page 3, ADG1414 datasheet)
- based on curves for similar switches, the leakage for input voltages close to 0V should be less than that
2) Drain of MAX328 with one channel selected
- max 10pA (page 2, MAX328 datasheet)
- typ 3pA (page 2, MAX328 datasheet)

Capacitance estimation: 20pF
1) Source of ADG1414, 8pF@1MHz typical (table 1, page 3, ADG1414 datasheet)
2) Channel of MAX328: not specified explicitly, but one may estimate it to be around 10pF@1MHz

Copyright CERN 2019.

This documentation describes Open Hardware and is licensed under the CERN OHL v.1.2.

You may redistribute and modify this documentation under the terms of the CERN OHL v.1.2. (http://ohwr.org/CERNOHL). This documentation is distributed WITHOUT ANY EXPRESS OR IMPLIED WARRANTY, INCLUDING OF MERCHANTABILITY, SATISFACTORY QUALITY AND FITNESS FOR A PARTICULAR PURPOSE.
Please see the CERN OHL v.1.2 for applicable conditions.

Project/Equipment	HGC sensor probecard		
Document	**HGC sensor probecard 8 channels group**	Designer	Szymon Kulis
		Drawn by	Szymon Kulis 23/08/2016
		Check.by	JMW 21-10-2016
		Last Mod.	JMW 12/02/2019
		File	group8chn.SchDoc
		Print Date	14/03/2019 15:19:57
		Sheet	7.5.6 of 79
EP/ESE	*European Organization for Nuclear Research CH-1211 Genève 23 - Switzerland*	EDA-03518-V3-0	Size A4 Rev -

8 to 1 multiplexer.
if EN then D=S[A]

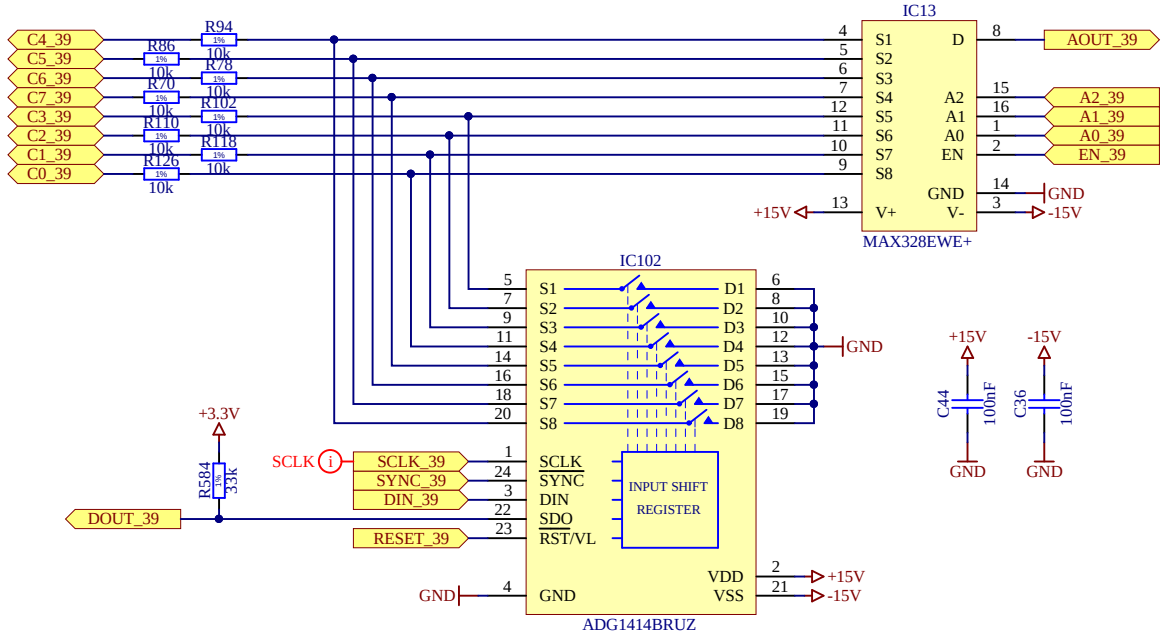

8 x SPST switch. The switches can be controlled independently.
Can be used to short (10 Ohm) each channel to ground (HVRET).

This feature is especially useful when leakage currents are not uniform between neighbor channels, having all channels shorted to the same potential prevents parasitic current flow between channels.

Copyright CERN 2019.

This documentation describes Open Hardware and is licensed under the CERN OHL v.1.2.

You may redistribute and modify this documentation under the terms of the CERN OHL v.1.2. (http://ohwr.org/CERNOHL). This documentation is distributed WITHOUT ANY EXPRESS OR IMPLIED WARRANTY, INCLUDING OF MERCHANTABILITY, SATISFACTORY QUALITY AND FITNESS FOR A PARTICULAR PURPOSE.
Please see the CERN OHL v.1.2 for applicable conditions.

Leakage estimation(@room temperature): 50pA
1)Source Off leakage of ADG1414:
- max 150pA (table 1, page 3, ADG1414 datasheet)
- typical 50pA for 10/-10V input voltages (table 1, page 3, ADG1414 datasheet)
- based on curves for similar switches, the leakage for input voltages close to 0V should be less than that
2) Drain of MAX328 with one channel selected
- max 10pA (page 2, MAX328 datasheet)
- typ 3pA (page 2, MAX328 datasheet)

Capacitance estimation: 20pF
1) Source of ADG1414, 8pF@1MHz typical (table 1, page 3, ADG1414 datasheet)
2) Channel of MAX328: not specified explicitly, but one may estimate it to be around 10pF@1MHz

Project/Equipment	HGC sensor probecard		
Document	**HGC sensor probecard 8 channels group**	Designer	Szymon Kulis
		Drawn by	Szymon Kulis 23/08/2016
		Check.by	JMW 21-10-2016
		Last Mod.	JMW 12/02/2019
		File	group8chn.SchDoc
		Print Date	14/03/2019 15:19:57
		Sheet	7.5.7 of 79
EP/ESE	*European Organization for Nuclear Research CH-1211 Genève 23 - Switzerland*	EDA-03518-V3-0	Size A4 Rev -

8 to 1 multiplexer.
if EN then D=S[A]

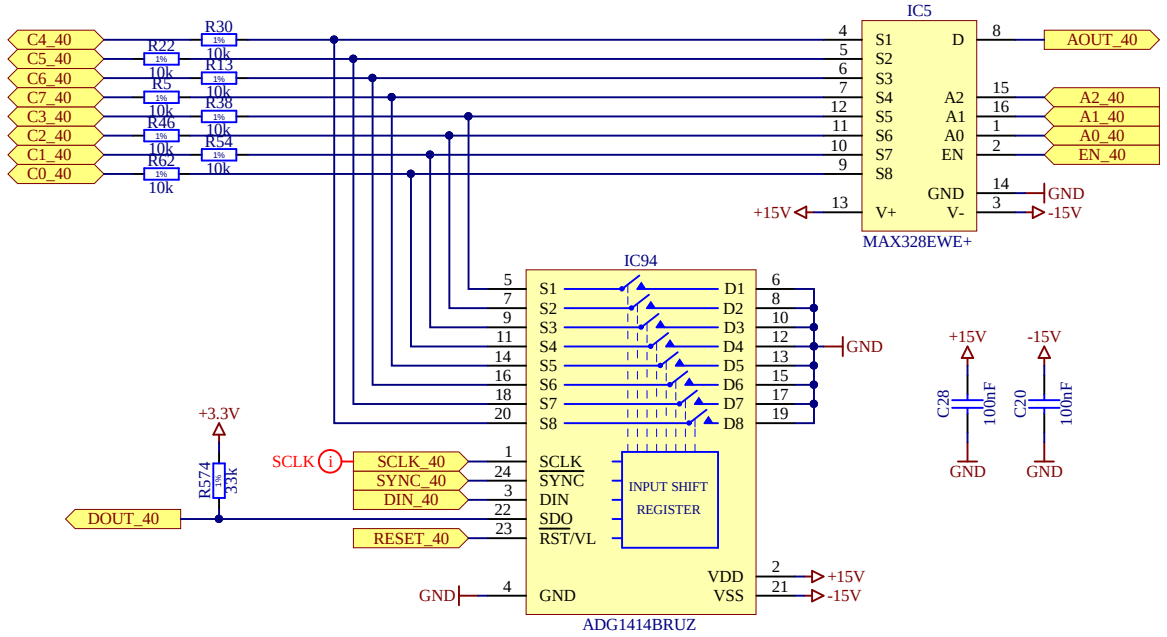

8 x SPST switch. The switches can be controlled independently.
Can be used to short (10 Ohm) each channel to ground (HVRET).

This feature is especially useful when leakage currents are not uniform between neighbor channels, having all channels shorted to the same potential prevents parasitic current flow between channels.

Leakage estimation(@room temperature): 50pA
1)Source Off leakage of ADG1414:
- max 150pA (table 1, page 3, ADG1414 datasheet)
- typical 50pA for 10/-10V input voltages (table 1, page 3, ADG1414 datasheet)
- based on curves for similar switches, the leakage for input voltages close to 0V should be less than that
2) Drain of MAX328 with one channel selected
- max 10pA (page 2, MAX328 datasheet)
- typ 3pA (page 2, MAX328 datasheet)

Capacitance estimation: 20pF
1) Source of ADG1414, 8pF@1MHz typical (table 1, page 3, ADG1414 datasheet)
2) Channel of MAX328: not specified explicitly, but one may estimate it to be around 10pF@1MHz

Copyright CERN 2019.

This documentation describes Open Hardware and is licensed under the CERN OHL v.1.2.

You may redistribute and modify this documentation under the terms of the CERN OHL v.1.2. (http://ohwr.org/CERNOHL). This documentation is distributed WITHOUT ANY EXPRESS OR IMPLIED WARRANTY, INCLUDING OF MERCHANTABILITY, SATISFACTORY QUALITY AND FITNESS FOR A PARTICULAR PURPOSE.
Please see the CERN OHL v.1.2 for applicable conditions.

Project/Equipment	HGC sensor probecard		
Document	**HGC sensor probecard 8 channels group**	Designer	Szymon Kulis
		Drawn by	Szymon Kulis 23/08/2016
		Check.by	JMW 21-10-2016
		Last Mod.	JMW 12/02/2019
		File	group8chn.SchDoc
		Print Date	14/03/2019 15:19:58
		Sheet	7.5.8 of 79
EP/ESE	*European Organization for Nuclear Research* *CH-1211 Genève 23 - Switzerland*	EDA-03518-V3-0	Size A4 Rev -

8 to 1 multiplexer.
if EN then D=S[A]

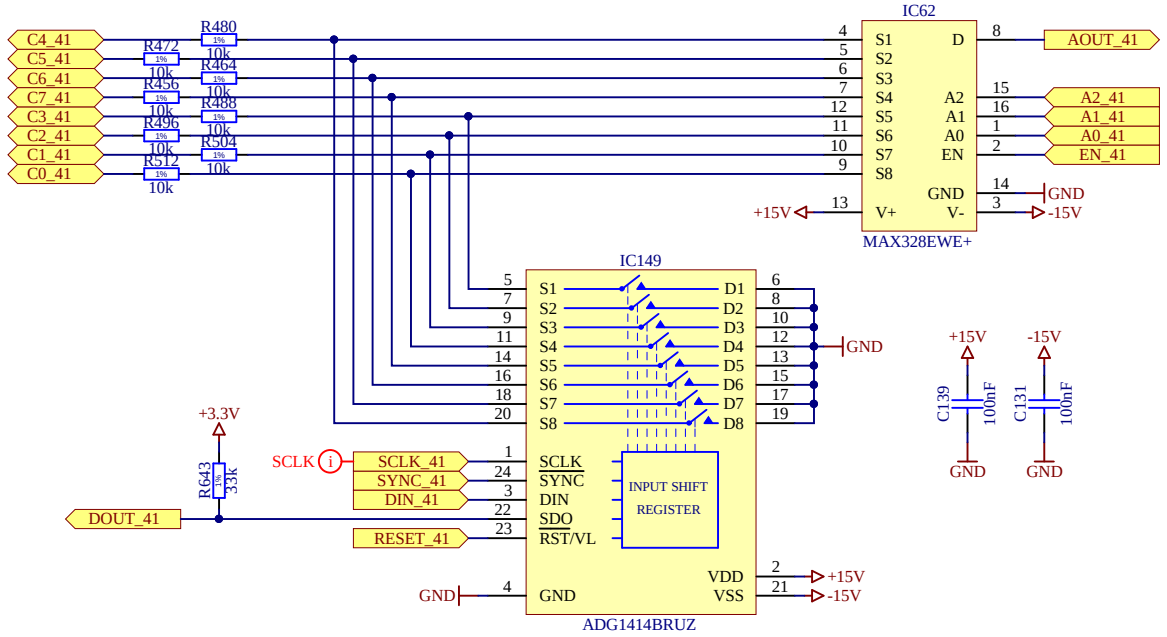

8 x SPST switch. The switches can be controlled independently.
Can be used to short (10 Ohm) each channel to ground (HVRET).

This feature is especially useful when leakage currents are not uniform between neighbor channels, having all channels shorted to the same potential prevents parasitic current flow between channels.

Leakage estimation(@room temperature): 50pA
1)Source Off leakage of ADG1414:
- max 150pA (table 1, page 3, ADG1414 datasheet)
- typical 50pA for 10/-10V input voltages (table 1, page 3, ADG1414 datasheet)
- based on curves for similar switches, the leakage for input voltages close to 0V should be less than that
2) Drain of MAX328 with one channel selected
- max 10pA (page 2, MAX328 datasheet)
- typ 3pA (page 2, MAX328 datasheet)

Capacitance estimation: 20pF
1) Source of ADG1414, 8pF@1MHz typical (table 1, page 3, ADG1414 datasheet)
2) Channel of MAX328: not specified explicitly, but one may estimate it to be around 10pF@1MHz

Copyright CERN 2019.

This documentation describes Open Hardware and is licensed under the CERN OHL v.1.2.

You may redistribute and modify this documentation under the terms of the CERN OHL v.1.2. (http://ohwr.org/CERNOHL). This documentation is distributed WITHOUT ANY EXPRESS OR IMPLIED WARRANTY, INCLUDING OF MERCHANTABILITY, SATISFACTORY QUALITY AND FITNESS FOR A PARTICULAR PURPOSE.
Please see the CERN OHL v.1.2 for applicable conditions.

Project/Equipment	HGC sensor probecard		
Document	**HGC sensor probecard 8 channels group**	Designer	Szymon Kulis
		Drawn by	Szymon Kulis 23/08/2016
		Check.by	JMW 21-10-2016
		Last Mod.	JMW 12/02/2019
		File	group8chn.SchDoc
		Print Date	14/03/2019 15:19:58
		Sheet	7.6.bf 79
EP/ESE	*European Organization for Nuclear Research CH-1211 Genève 23 - Switzerland*	EDA-03518-V3-0	Size A4 Rev -

8 to 1 multiplexer.
if EN then D=S[A]

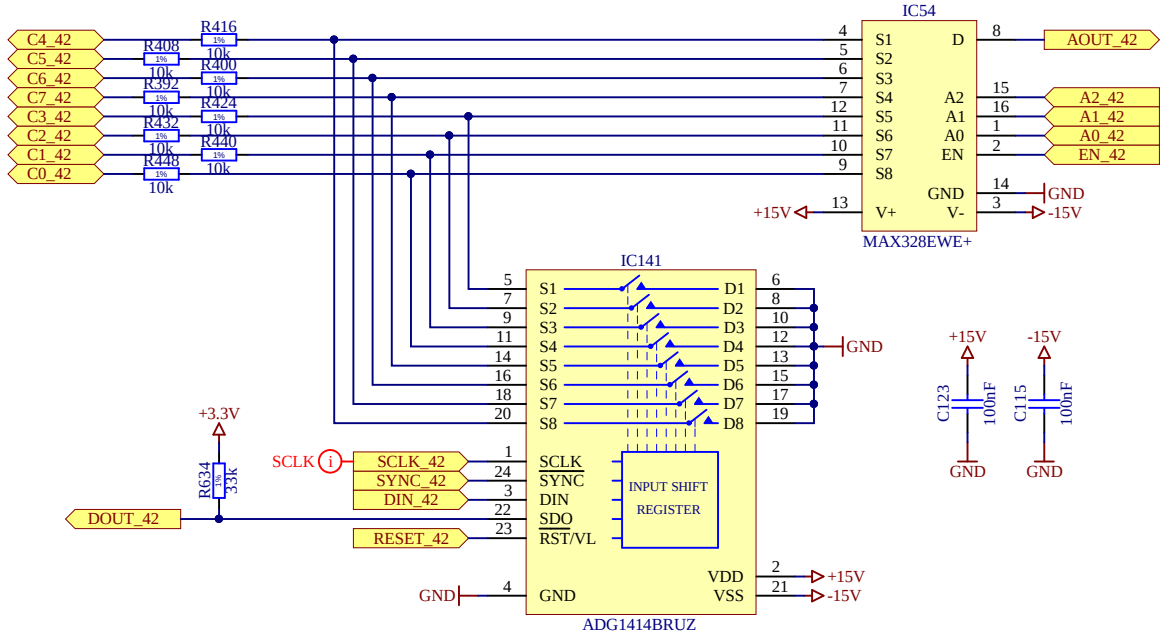

8 x SPST switch. The switches can be controlled independently.
Can be used to short (10 Ohm) each channel to ground (HVRET).

This feature is especially useful when leakage currents are not uniform between neighbor channels, having all channels shorted to the same potential prevents parasitic current flow between channels.

Leakage estimation(@room temperature): 50pA
1)Source Off leakage of ADG1414:
- max 150pA (table 1, page 3, ADG1414 datasheet)
- typical 50pA for 10/-10V input voltages (table 1, page 3, ADG1414 datasheet)
- based on curves for similar switches, the leakage for input voltages close to 0V should be less than that
2) Drain of MAX328 with one channel selected
- max 10pA (page 2, MAX328 datasheet)
- typ 3pA (page 2, MAX328 datasheet)

Capacitance estimation: 20pF
1) Source of ADG1414, 8pF@1MHz typical (table 1, page 3, ADG1414 datasheet)
2) Channel of MAX328: not specified explicitly, but one may estimate it to be around 10pF@1MHz

Copyright CERN 2019.

This documentation describes Open Hardware and is licensed under the CERN OHL v.1.2.

You may redistribute and modify this documentation under the terms of the CERN OHL v.1.2. (http://ohwr.org/CERNOHL). This documentation is distributed WITHOUT ANY EXPRESS OR IMPLIED WARRANTY, INCLUDING OF MERCHANTABILITY, SATISFACTORY QUALITY AND FITNESS FOR A PARTICULAR PURPOSE.
Please see the CERN OHL v.1.2 for applicable conditions.

Project/Equipment	HGC sensor probecard		
Document	**HGC sensor probecard 8 channels group**	Designer	Szymon Kulis
		Drawn by	Szymon Kulis 23/08/2016
		Check.by	JMW 21-10-2016
		Last Mod.	JMW 12/02/2019
		File	group8chn.SchDoc
		Print Date	14/03/2019 15:19:59

EP/ESE

European Organization for Nuclear Research
CH-1211 Genève 23 - Switzerland

EDA-03518-V3-0 | Size A4 | Rev -

8 to 1 multiplexer.
if EN then D=S[A]

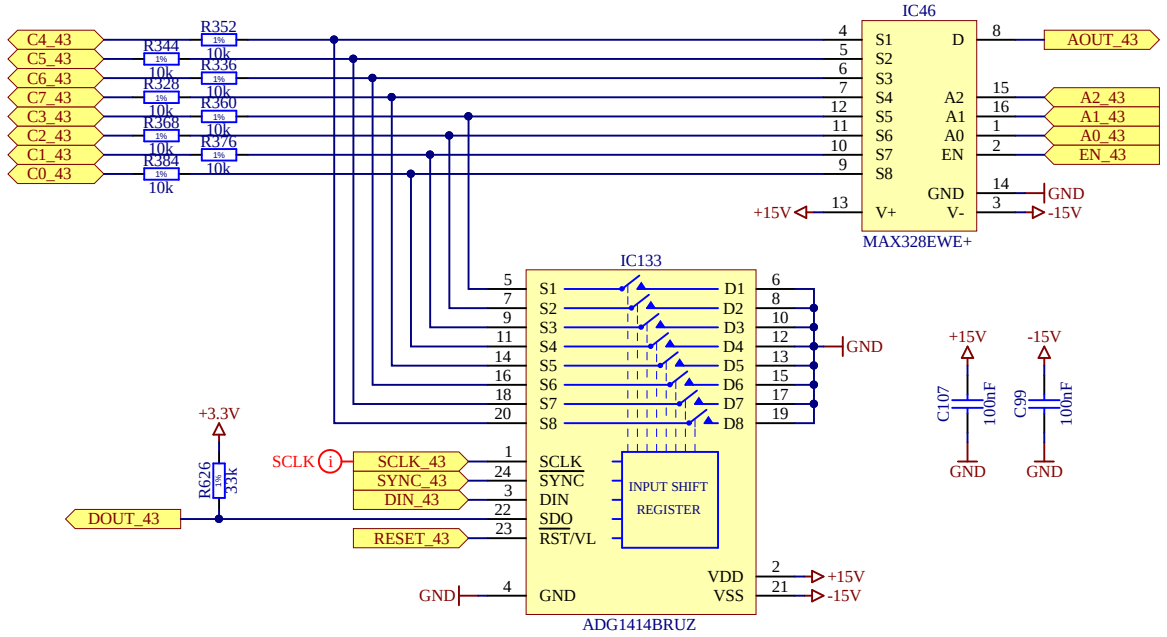

8 x SPST switch. The switches can be controlled independently.
Can be used to short (10 Ohm) each channel to ground (HVRET).

This feature is especially useful when leakage currents are not uniform between neighbor channels, having all channels shorted to the same potential prevents parasitic current flow between channels.

Leakage estimation(@room temperature): 50pA
1)Source Off leakage of ADG1414:
- max 150pA (table 1, page 3, ADG1414 datasheet)
- typical 50pA for 10/-10V input voltages (table 1, page 3, ADG1414 datasheet)
- based on curves for similar switches, the leakage for input voltages close to 0V should be less than that
2) Drain of MAX328 with one channel selected
- max 10pA (page 2, MAX328 datasheet)
- typ 3pA (page 2, MAX328 datasheet)

Capacitance estimation: 20pF
1) Source of ADG1414, 8pF@1MHz typical (table 1, page 3, ADG1414 datasheet)
2) Channel of MAX328: not specified explicitly, but one may estimate it to be around 10pF@1MHz

Copyright CERN 2019.

This documentation describes Open Hardware and is licensed under the CERN OHL v.1.2.

You may redistribute and modify this documentation under the terms of the CERN OHL v.1.2. (http://ohwr.org/CERNOHL). This documentation is distributed WITHOUT ANY EXPRESS OR IMPLIED WARRANTY, INCLUDING OF MERCHANTABILITY, SATISFACTORY QUALITY AND FITNESS FOR A PARTICULAR PURPOSE.
Please see the CERN OHL v.1.2 for applicable conditions.

Project/Equipment	HGC sensor probecard		
Document	**HGC sensor probecard 8 channels group**	Designer	Szymon Kulis
		Drawn by	Szymon Kulis 23/08/2016
		Check.by	JMW 21-10-2016
		Last Mod.	JMW 12/02/2019
		File	group8chn.SchDoc
		Print Date	14/03/2019 15:19:59

EP/ESE

European Organization for Nuclear Research
CH-1211 Genève 23 - Switzerland

EDA-03518-V3-0

Size A4 | Rev -

8 to 1 multiplexer.
if EN then D=S[A]

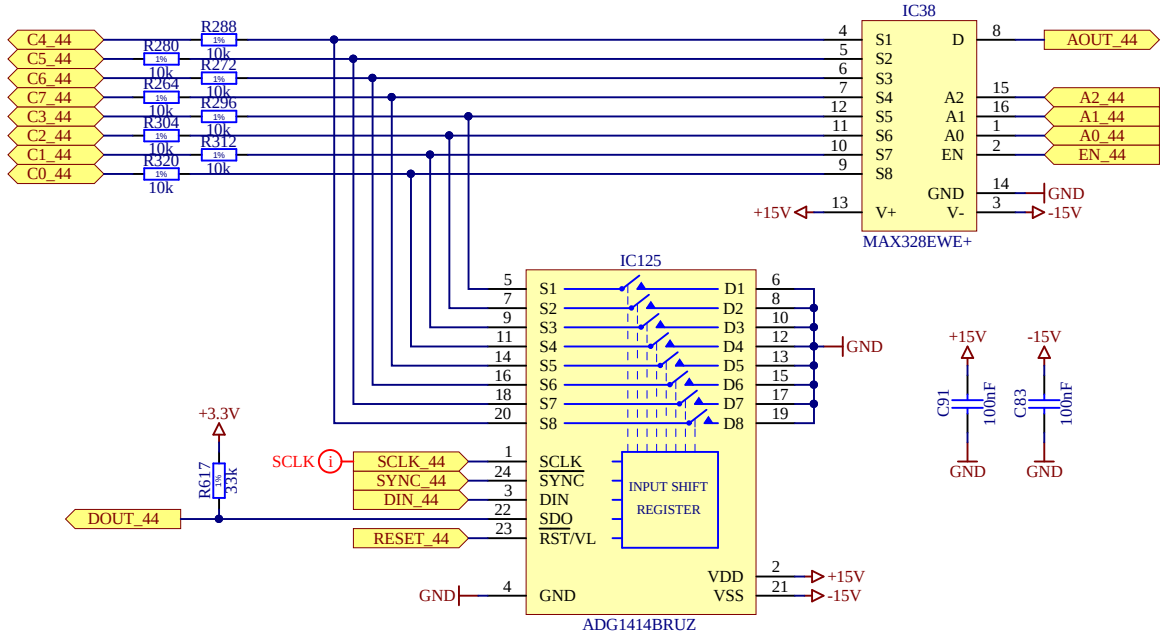

8 x SPST switch. The switches can be controlled independently.
Can be used to short (10 Ohm) each channel to ground (HVRET).

This feature is especially useful when leakage currents are not uniform between neighbor channels, having all channels shorted to the same potential prevents parasitic current flow between channels.

Leakage estimation(@room temperature): 50pA
1)Source Off leakage of ADG1414:
- max 150pA (table 1, page 3, ADG1414 datasheet)
- typical 50pA for 10/-10V input voltages (table 1, page 3, ADG1414 datasheet)
- based on curves for similar switches, the leakage for input voltages close to 0V should be less than that
2) Drain of MAX328 with one channel selected
- max 10pA (page 2, MAX328 datasheet)
- typ 3pA (page 2, MAX328 datasheet)

Capacitance estimation: 20pF
1) Source of ADG1414, 8pF@1MHz typical (table 1, page 3, ADG1414 datasheet)
2) Channel of MAX328: not specified explicitly, but one may estimate it to be around 10pF@1MHz

Copyright CERN 2019.

This documentation describes Open Hardware and is licensed under the CERN OHL v.1.2.

You may redistribute and modify this documentation under the terms of the CERN OHL v.1.2. (http://ohwr.org/CERNOHL). This documentation is distributed WITHOUT ANY EXPRESS OR IMPLIED WARRANTY, INCLUDING OF MERCHANTABILITY, SATISFACTORY QUALITY AND FITNESS FOR A PARTICULAR PURPOSE.
Please see the CERN OHL v.1.2 for applicable conditions.

Project/Equipment	HGC sensor probecard		
Document	**HGC sensor probecard 8 channels group**	Designer	Szymon Kulis
		Drawn by	Szymon Kulis 23/08/2016
		Check.by	JMW 21-10-2016
		Last Mod.	JMW 12/02/2019
		File	group8chn.SchDoc
		Print Date	14/03/2019 15:20:00

EP/ESE

European Organization for Nuclear Research
CH-1211 Genève 23 - Switzerland

EDA-03518-V3-0 | Size A4 | Rev -

8 to 1 multiplexer.
if EN then D=S[A]

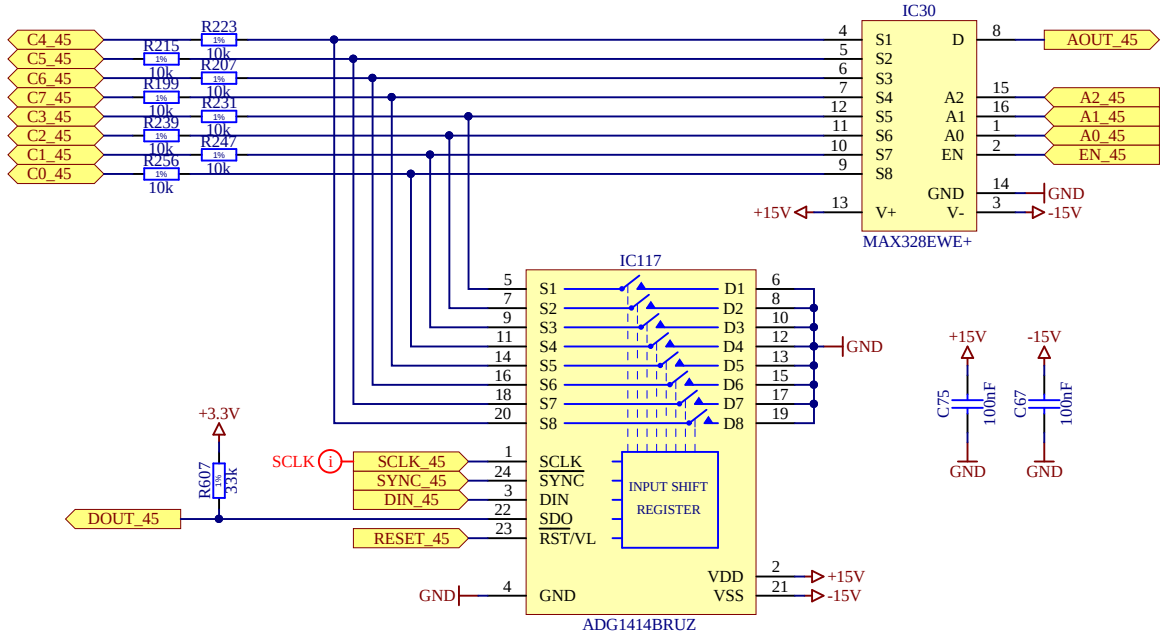

8 x SPST switch. The switches can be controlled independently.
Can be used to short (10 Ohm) each channel to ground (HVRET).

This feature is especially useful when leakage currents are not uniform between neighbor channels, having all channels shorted to the same potential prevents parasitic current flow between channels.

Leakage estimation(@room temperature): 50pA
1)Source Off leakage of ADG1414:
- max 150pA (table 1, page 3, ADG1414 datasheet)
- typical 50pA for 10/-10V input voltages (table 1, page 3, ADG1414 datasheet)
- based on curves for similar switches, the leakage for input voltages close to 0V should be less than that
2) Drain of MAX328 with one channel selected
- max 10pA (page 2, MAX328 datasheet)
- typ 3pA (page 2, MAX328 datasheet)

Capacitance estimation: 20pF
1) Source of ADG1414, 8pF@1MHz typical (table 1, page 3, ADG1414 datasheet)
2) Channel of MAX328: not specified explicitly, but one may estimate it to be around 10pF@1MHz

Copyright CERN 2019.

This documentation describes Open Hardware and is licensed under the CERN OHL v.1.2.

You may redistribute and modify this documentation under the terms of the CERN OHL v.1.2. (http://ohwr.org/CERNOHL). This documentation is distributed WITHOUT ANY EXPRESS OR IMPLIED WARRANTY, INCLUDING OF MERCHANTABILITY, SATISFACTORY QUALITY AND FITNESS FOR A PARTICULAR PURPOSE.
Please see the CERN OHL v.1.2 for applicable conditions.

Project/Equipment	HGC sensor probecard		
Document	**HGC sensor probecard 8 channels group**	Designer	Szymon Kulis
		Drawn by	Szymon Kulis 23/08/2016
		Check.by	JMW 21-10-2016
		Last Mod.	JMW 12/02/2019
		File	group8chn.SchDoc
		Print Date	14/03/2019 15:20:00

EP/ESE

European Organization for Nuclear Research
CH-1211 Genève 23 - Switzerland

EDA-03518-V3-0

Size A4 | Rev -

8 to 1 multiplexer.
if EN then D=S[A]

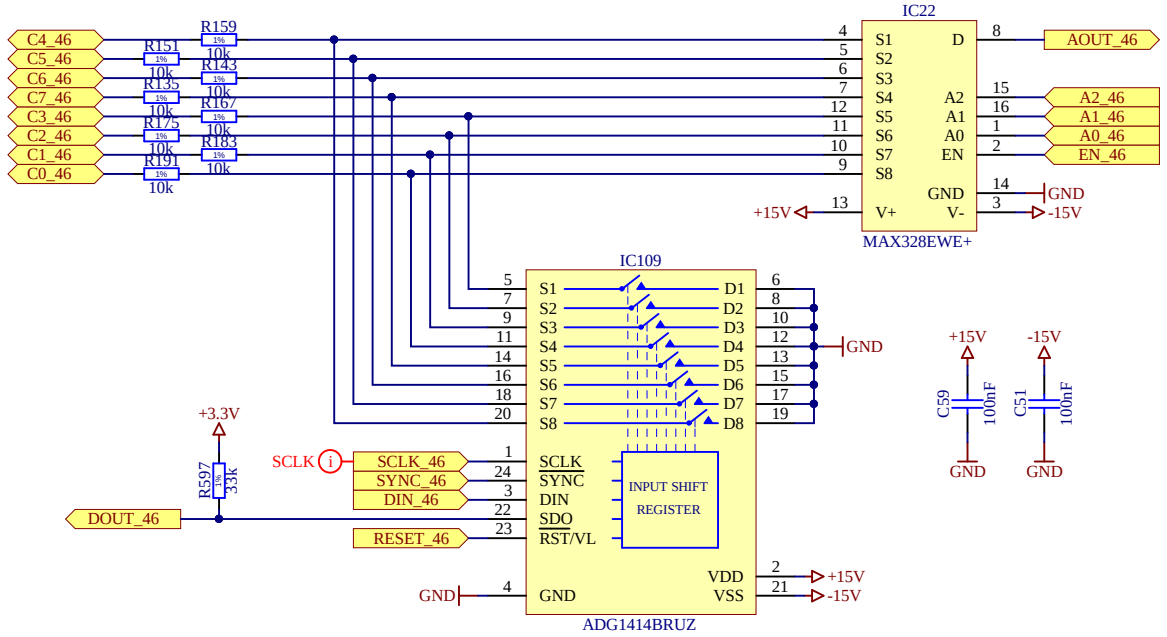

8 x SPST switch. The switches can be controlled independently.
Can be used to short (10 Ohm) each channel to ground (HVRET).

This feature is especially useful when leakage currents are not uniform between neighbor channels, having all channels shorted to the same potential prevents parasitic current flow between channels.

Leakage estimation(@room temperature): 50pA
1)Source Off leakage of ADG1414:
- max 150pA (table 1, page 3, ADG1414 datasheet)
- typical 50pA for 10/-10V input voltages (table 1, page 3, ADG1414 datasheet)
- based on curves for similar switches, the leakage for input voltages close to 0V should be less than that
2) Drain of MAX328 with one channel selected
- max 10pA (page 2, MAX328 datasheet)
- typ 3pA (page 2, MAX328 datasheet)

Capacitance estimation: 20pF
1) Source of ADG1414, 8pF@1MHz typical (table 1, page 3, ADG1414 datasheet)
2) Channel of MAX328: not specified explicitly, but one may estimate it to be around 10pF@1MHz

Copyright CERN 2019.

This documentation describes Open Hardware and is licensed under the CERN OHL v.1.2.

You may redistribute and modify this documentation under the terms of the CERN OHL v.1.2. (http://ohwr.org/CERNOHL). This documentation is distributed WITHOUT ANY EXPRESS OR IMPLIED WARRANTY, INCLUDING OF MERCHANTABILITY, SATISFACTORY QUALITY AND FITNESS FOR A PARTICULAR PURPOSE.
Please see the CERN OHL v.1.2 for applicable conditions.

Project/Equipment	HGC sensor probecard		
Document	**HGC sensor probecard 8 channels group**	Designer	Szymon Kulis
		Drawn by	Szymon Kulis 23/08/2016
		Check.by	JMW 21-10-2016
		Last Mod.	JMW 12/02/2019
		File	group8chn.SchDoc
		Print Date	14/03/2019 15:20:01
		Sheet	7.6.6 of 79
EP/ESE	*European Organization for Nuclear Research* *CH-1211 Genève 23 - Switzerland*	EDA-03518-V3-0	Size A4 Rev -

8 to 1 multiplexer.
if EN then D=S[A]

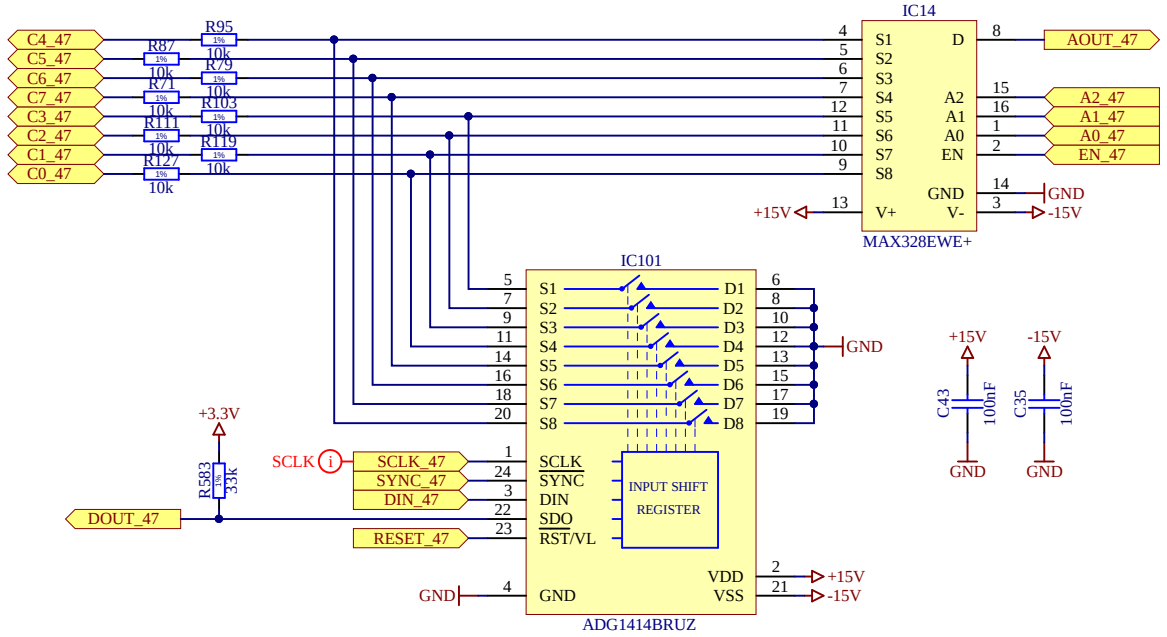

8 x SPST switch. The switches can be controlled independently.
Can be used to short (10 Ohm) each channel to ground (HVRET).

This feature is especially useful when leakage currents are not uniform between neighbor channels, having all channels shorted to the same potential prevents parasitic current flow between channels.

Leakage estimation(@room temperature): 50pA
1)Source Off leakage of ADG1414:
- max 150pA (table 1, page 3, ADG1414 datasheet)
- typical 50pA for 10/-10V input voltages (table 1, page 3, ADG1414 datasheet)
- based on curves for similar switches, the leakage for input voltages close to 0V should be less than that
2) Drain of MAX328 with one channel selected
- max 10pA (page 2, MAX328 datasheet)
- typ 3pA (page 2, MAX328 datasheet)

Capacitance estimation: 20pF
1) Source of ADG1414, 8pF@1MHz typical (table 1, page 3, ADG1414 datasheet)
2) Channel of MAX328: not specified explicitly, but one may estimate it to be around 10pF@1MHz

Copyright CERN 2019.

This documentation describes Open Hardware and is licensed under the CERN OHL v.1.2.

You may redistribute and modify this documentation under the terms of the CERN OHL v.1.2. (http://ohwr.org/CERNOHL). This documentation is distributed WITHOUT ANY EXPRESS OR IMPLIED WARRANTY, INCLUDING OF MERCHANTABILITY, SATISFACTORY QUALITY AND FITNESS FOR A PARTICULAR PURPOSE.
Please see the CERN OHL v.1.2 for applicable conditions.

Project/Equipment	HGC sensor probecard		
Document	**HGC sensor probecard 8 channels group**	Designer	Szymon Kulis
		Drawn by	Szymon Kulis 23/08/2016
		Check.by	JMW 21-10-2016
		Last Mod.	JMW 12/02/2019
		File	group8chn.SchDoc
		Print Date	14/03/2019 15:20:01
		Sheet	7.6.7 of 79
EP/ESE	European Organization for Nuclear Research CH-1211 Genève 23 - Switzerland	EDA-03518-V3-0	Size A4 / Rev -

8 to 1 multiplexer.
if EN then D=S[A]

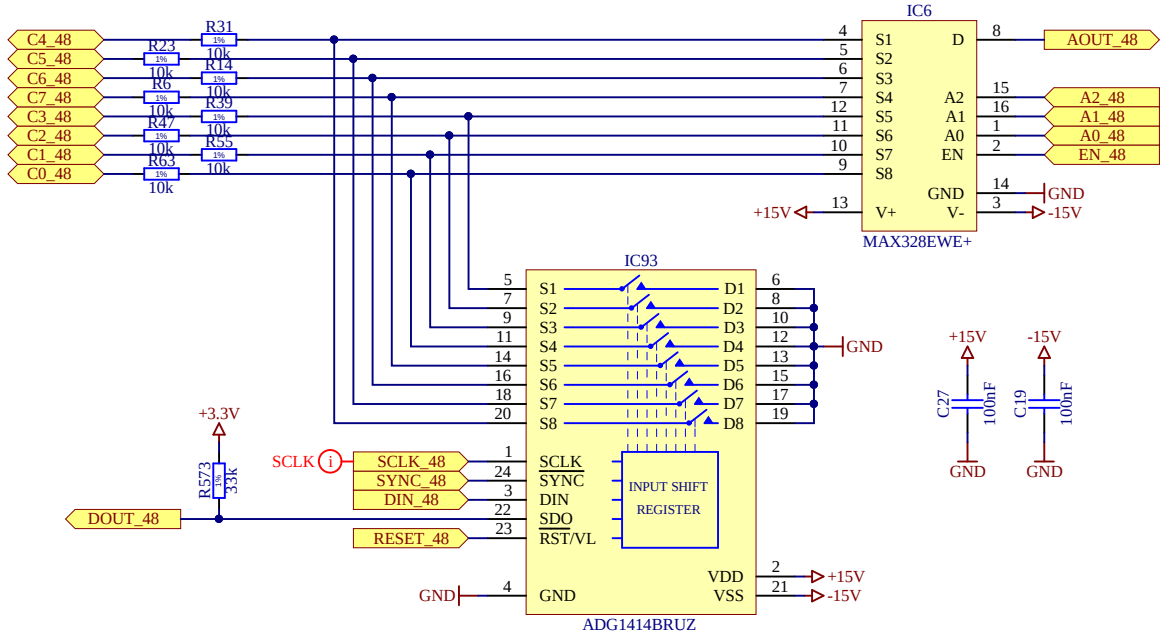

8 x SPST switch. The switches can be controlled independently.
Can be used to short (10 Ohm) each channel to ground (HVRET).

This feature is especially useful when leakage currents are not uniform between neighbor channels, having all channels shorted to the same potential prevents parasitic current flow between channels.

Leakage estimation(@room temperature): 50pA
1)Source Off leakage of ADG1414:
- max 150pA (table 1, page 3, ADG1414 datasheet)
- typical 50pA for 10/-10V input voltages (table 1, page 3, ADG1414 datasheet)
- based on curves for similar switches, the leakage for input voltages close to 0V should be less than that
2) Drain of MAX328 with one channel selected
- max 10pA (page 2, MAX328 datasheet)
- typ 3pA (page 2, MAX328 datasheet)

Capacitance estimation: 20pF
1) Source of ADG1414, 8pF@1MHz typical (table 1, page 3, ADG1414 datasheet)
2) Channel of MAX328: not specified explicitly, but one may estimate it to be around 10pF@1MHz

Copyright CERN 2019.

This documentation describes Open Hardware and is licensed under the CERN OHL v.1.2.

You may redistribute and modify this documentation under the terms of the CERN OHL v.1.2. (http://ohwr.org/CERNOHL). This documentation is distributed WITHOUT ANY EXPRESS OR IMPLIED WARRANTY, INCLUDING OF MERCHANTABILITY, SATISFACTORY QUALITY AND FITNESS FOR A PARTICULAR PURPOSE.
Please see the CERN OHL v.1.2 for applicable conditions.

Project/Equipment	HGC sensor probecard		
Document	**HGC sensor probecard 8 channels group**	Designer	Szymon Kulis
		Drawn by	Szymon Kulis 23/08/2016
		Check.by	JMW 21-10-2016
		Last Mod.	JMW 12/02/2019
		File	group8chn.SchDoc
		Print Date	14/03/2019 15:20:02
		Sheet	7.6.8 of 79
EP/ESE	European Organization for Nuclear Research CH-1211 Genève 23 - Switzerland	EDA-03518-V3-0	Size A4 Rev -

8 to 1 multiplexer.
if EN then D=S[A]

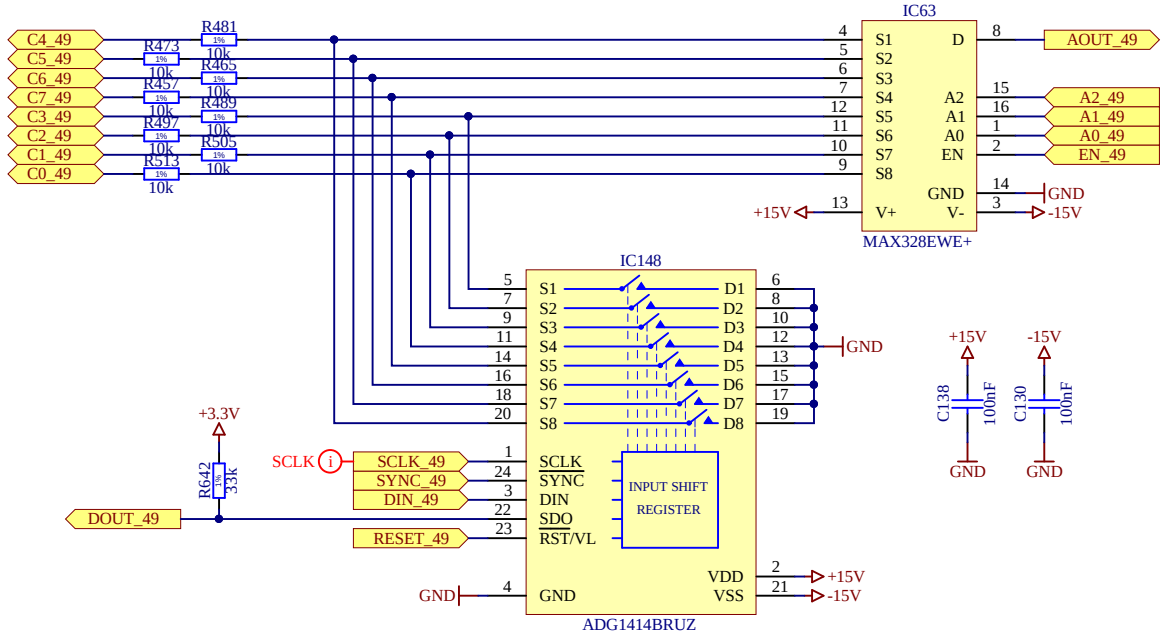

8 x SPST switch. The switches can be controlled independently.
Can be used to short (10 Ohm) each channel to ground (HVRET).

This feature is especially useful when leakage currents are not uniform between neighbor channels, having all channels shorted to the same potential prevents parasitic current flow between channels.

Copyright CERN 2019.

This documentation describes Open Hardware and is licensed under the CERN OHL v.1.2.

You may redistribute and modify this documentation under the terms of the CERN OHL v.1.2. (http://ohwr.org/CERNOHL). This documentation is distributed WITHOUT ANY EXPRESS OR IMPLIED WARRANTY, INCLUDING OF MERCHANTABILITY, SATISFACTORY QUALITY AND FITNESS FOR A PARTICULAR PURPOSE.
Please see the CERN OHL v.1.2 for applicable conditions.

Leakage estimation(@room temperature): 50pA
1)Source Off leakage of ADG1414:
- max 150pA (table 1, page 3, ADG1414 datasheet)
- typical 50pA for 10/-10V input voltages (table 1, page 3, ADG1414 datasheet)
- based on curves for similar switches, the leakage for input voltages close to 0V should be less than that
2) Drain of MAX328 with one channel selected
- max 10pA (page 2, MAX328 datasheet)
- typ 3pA (page 2, MAX328 datasheet)

Capacitance estimation: 20pF
1) Source of ADG1414, 8pF@1MHz typical (table 1, page 3, ADG1414 datasheet)
2) Channel of MAX328: not specified explicitly, but one may estimate it to be around 10pF@1MHz

Project/Equipment	HGC sensor probecard	
Document	**HGC sensor probecard 8 channels group**	
Designer	Szymon Kulis	
Drawn by	Szymon Kulis	23/08/2016
Check.by	JMW	21-10-2016
Last Mod.	JMW	12/02/2019
File	group8chn.SchDoc	
Print Date	14/03/2019 15:20:02	Sheet 7.7.bf 79
EP/ESE	European Organization for Nuclear Research, CH-1211 Genève 23 - Switzerland	EDA-03518-V3-0
		Size A4 / Rev -

8 to 1 multiplexer.
if EN then D=S[A]

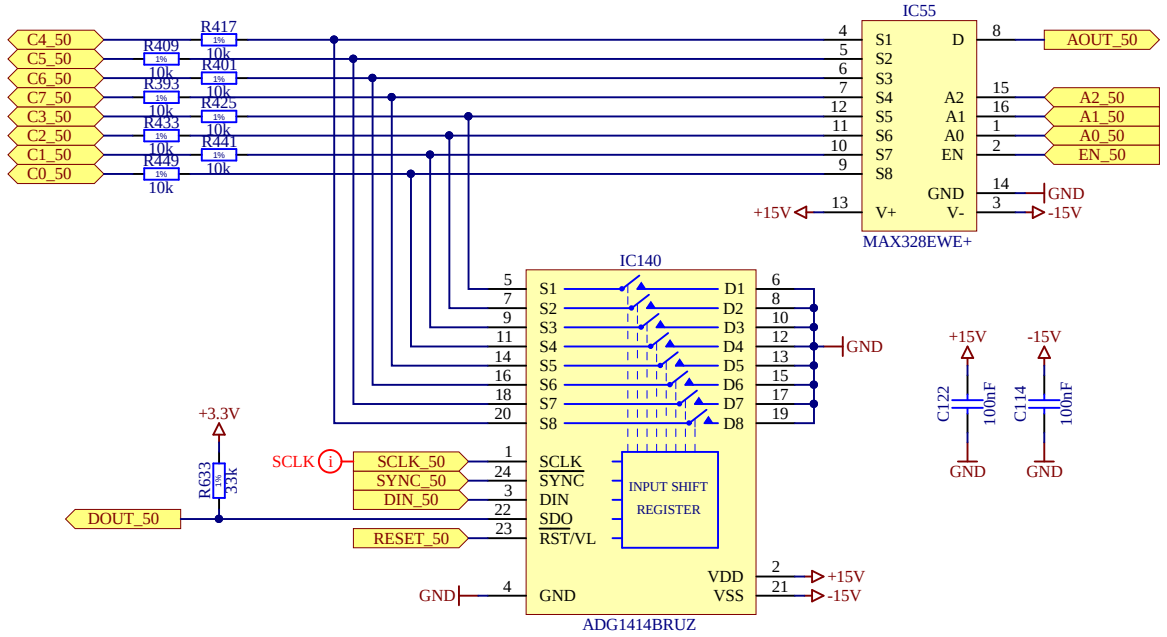

8 x SPST switch. The switches can be controlled independently.
Can be used to short (10 Ohm) each channel to ground (HVRET).

This feature is especially useful when leakage currents are not uniform between neighbor channels, having all channels shorted to the same potential prevents parasitic current flow between channels.

Copyright CERN 2019.

This documentation describes Open Hardware and is licensed under the CERN OHL v.1.2.

You may redistribute and modify this documentation under the terms of the CERN OHL v.1.2. (http://ohwr.org/CERNOHL). This documentation is distributed WITHOUT ANY EXPRESS OR IMPLIED WARRANTY, INCLUDING OF MERCHANTABILITY, SATISFACTORY QUALITY AND FITNESS FOR A PARTICULAR PURPOSE.
Please see the CERN OHL v.1.2 for applicable conditions.

Leakage estimation(@room temperature): 50pA
1)Source Off leakage of ADG1414:
- max 150pA (table 1, page 3, ADG1414 datasheet)
- typical 50pA for 10/-10V input voltages (table 1, page 3, ADG1414 datasheet)
- based on curves for similar switches, the leakage for input voltages close to 0V should be less than that
2) Drain of MAX328 with one channel selected
- max 10pA (page 2, MAX328 datasheet)
- typ 3pA (page 2, MAX328 datasheet)

Capacitance estimation: 20pF
1) Source of ADG1414, 8pF@1MHz typical (table 1, page 3, ADG1414 datasheet)
2) Channel of MAX328: not specified explicitly, but one may estimate it to be around 10pF@1MHz

Project/Equipment	HGC sensor probecard		
Document	**HGC sensor probecard 8 channels group**	Designer	Szymon Kulis
		Drawn by	Szymon Kulis 23/08/2016
		Check.by	JMW 21-10-2016
		Last Mod.	JMW 12/02/2019
		File	group8chn.SchDoc
		Print Date	14/03/2019 15:20:03
EP/ESE	*European Organization for Nuclear Research* *CH-1211 Genève 23 - Switzerland*	Sheet	7.7.2 of 79
	EDA-03518-V3-0	Size	A4
		Rev	-

8 to 1 multiplexer.
if EN then D=S[A]

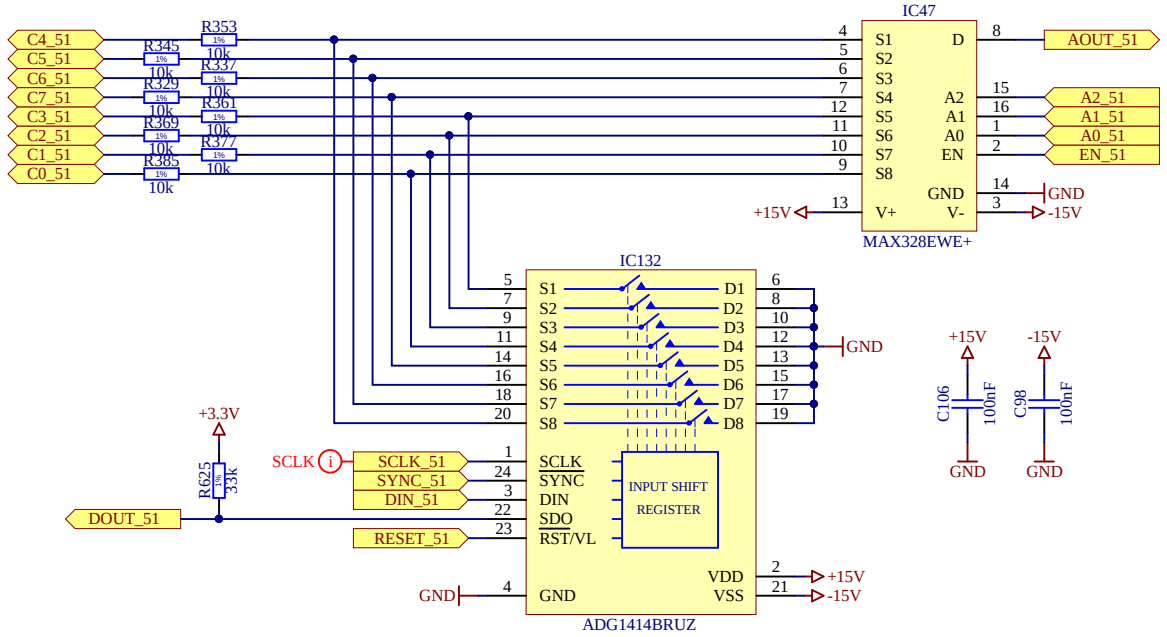

8 x SPST switch. The switches can be controlled independently.
Can be used to short (10 Ohm) each channel to ground (HVRET).

This feature is especially useful when leakage currents are not uniform between neighbor channels, having all channels shorted to the same potential prevents parasitic current flow between channels.

Leakage estimation(@room temperature): 50pA
1)Source Off leakage of ADG1414:
- max 150pA (table 1, page 3, ADG1414 datasheet)
- typical 50pA for 10/-10V input voltages (table 1, page 3, ADG1414 datasheet)
- based on curves for similar switches, the leakage for input voltages close to 0V should be less than that
2) Drain of MAX328 with one channel selected
- max 10pA (page 2, MAX328 datasheet)
- typ 3pA (page 2, MAX328 datasheet)

Capacitance estimation: 20pF
1) Source of ADG1414, 8pF@1MHz typical (table 1, page 3, ADG1414 datasheet)
2) Channel of MAX328: not specified explicitly, but one may estimate it to be around 10pF@1MHz

Copyright CERN 2019.

This documentation describes Open Hardware and is licensed under the CERN OHL v.1.2.

You may redistribute and modify this documentation under the terms of the CERN OHL v.1.2. (http://ohwr.org/CERNOHL). This documentation is distributed WITHOUT ANY EXPRESS OR IMPLIED WARRANTY, INCLUDING OF MERCHANTABILITY, SATISFACTORY QUALITY AND FITNESS FOR A PARTICULAR PURPOSE.
Please see the CERN OHL v.1.2 for applicable conditions.

Project/Equipment	HGC sensor probecard		
Document	**HGC sensor probecard 8 channels group**	Designer	Szymon Kulis
		Drawn by	Szymon Kulis 23/08/2016
		Check.by	JMW 21-10-2016
		Last Mod.	JMW 12/02/2019
		File	group8chn.SchDoc
		Print Date	14/03/2019 15:20:03

EP/ESE

European Organization for Nuclear Research
CH-1211 Genève 23 - Switzerland

EDA-03518-V3-0

Size A4 | Rev -

8 to 1 multiplexer.
if EN then D=S[A]

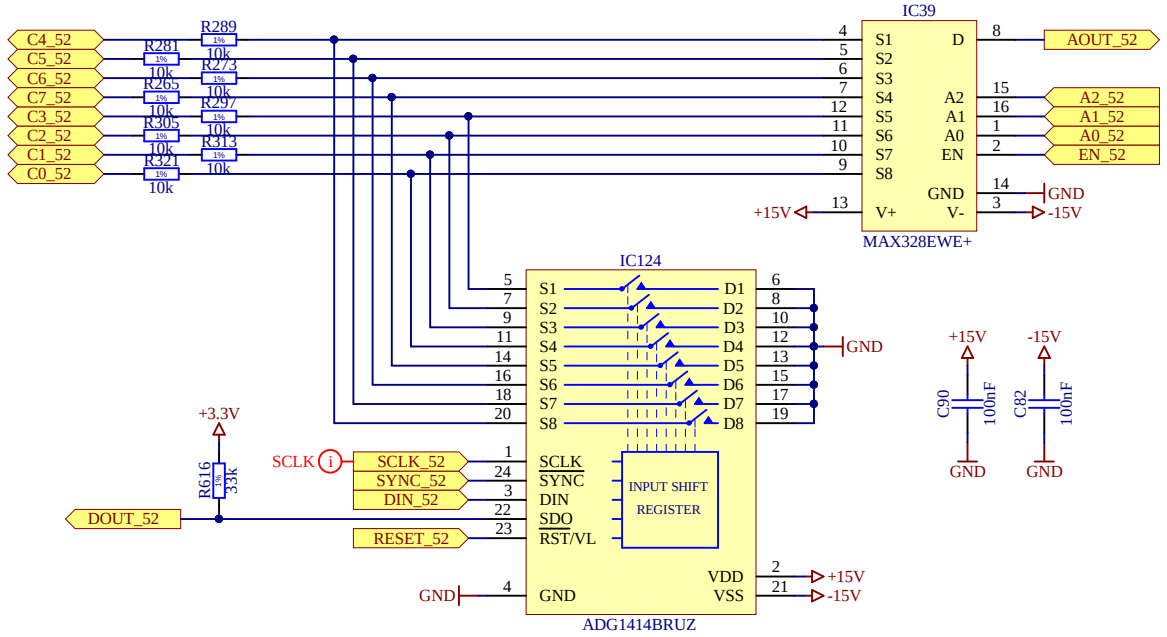

8 x SPST switch. The switches can be controlled independently.
Can be used to short (10 Ohm) each channel to ground (HVRET).

This feature is especially useful when leakage currents are not uniform between neighbor channels, having all channels shorted to the same potential prevents parasitic current flow between channels.

Leakage estimation(@room temperature): 50pA
1)Source Off leakage of ADG1414:
- max 150pA (table 1, page 3, ADG1414 datasheet)
- typical 50pA for 10/-10V input voltages (table 1, page 3, ADG1414 datasheet)
- based on curves for similar switches, the leakage for input voltages close to 0V should be less than that
2) Drain of MAX328 with one channel selected
- max 10pA (page 2, MAX328 datasheet)
- typ 3pA (page 2, MAX328 datasheet)

Capacitance estimation: 20pF
1) Source of ADG1414, 8pF@1MHz typical (table 1, page 3, ADG1414 datasheet)
2) Channel of MAX328: not specified explicitly, but one may estimate it to be around 10pF@1MHz

Copyright CERN 2019.

This documentation describes Open Hardware and is licensed under the CERN OHL v.1.2.

You may redistribute and modify this documentation under the terms of the CERN OHL v.1.2. (http://ohwr.org/CERNOHL). This documentation is distributed WITHOUT ANY EXPRESS OR IMPLIED WARRANTY, INCLUDING OF MERCHANTABILITY, SATISFACTORY QUALITY AND FITNESS FOR A PARTICULAR PURPOSE.
Please see the CERN OHL v.1.2 for applicable conditions.

Project/Equipment	HGC sensor probecard		
Document	**HGC sensor probecard 8 channels group**	Designer	Szymon Kulis
		Drawn by	Szymon Kulis 23/08/2016
		Check.by	JMW 21-10-2016
		Last Mod.	JMW 12/02/2019
		File	group8chn.SchDoc
		Print Date	14/03/2019 15:20:04
		Sheet	7.7.4 of 79
EP/ESE	*European Organization for Nuclear Research* *CH-1211 Genève 23 - Switzerland*	EDA-03518-V3-0	Size A4 Rev -

8 to 1 multiplexer.
if EN then D=S[A]

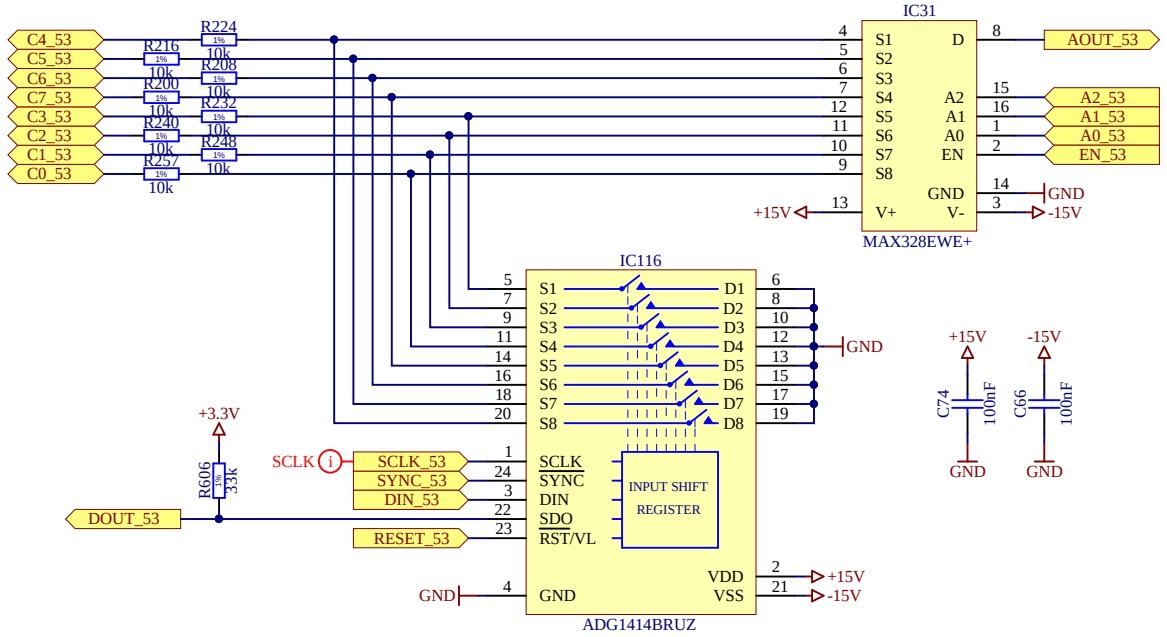

8 x SPST switch. The switches can be controlled independently.
Can be used to short (10 Ohm) each channel to ground (HVRET).

This feature is especially useful when leakage currents are not uniform between neighbor channels, having all channels shorted to the same potential prevents parasitic current flow between channels.

Copyright CERN 2019.

This documentation describes Open Hardware and is licensed under the CERN OHL v.1.2.

You may redistribute and modify this documentation under the terms of the CERN OHL v.1.2. (http://ohwr.org/CERNOHL). This documentation is distributed WITHOUT ANY EXPRESS OR IMPLIED WARRANTY, INCLUDING OF MERCHANTABILITY, SATISFACTORY QUALITY AND FITNESS FOR A PARTICULAR PURPOSE.
Please see the CERN OHL v.1.2 for applicable conditions.

Leakage estimation(@room temperature): 50pA
1)Source Off leakage of ADG1414:
- max 150pA (table 1, page 3, ADG1414 datasheet)
- typical 50pA for 10/-10V input voltages (table 1, page 3, ADG1414 datasheet)
- based on curves for similar switches, the leakage for input voltages close to 0V should be less than that
2) Drain of MAX328 with one channel selected
- max 10pA (page 2, MAX328 datasheet)
- typ 3pA (page 2, MAX328 datasheet)

Capacitance estimation: 20pF
1) Source of ADG1414, 8pF@1MHz typical (table 1, page 3, ADG1414 datasheet)
2) Channel of MAX328: not specified explicitly, but one may estimate it to be around 10pF@1MHz

Project/Equipment	HGC sensor probecard		
Document	**HGC sensor probecard 8 channels group**	Designer	Szymon Kulis
		Drawn by	Szymon Kulis 23/08/2016
		Check.by	JMW 21-10-2016
		Last Mod.	JMW 12/02/2019
		File	group8chn.SchDoc
		Print Date	14/03/2019 15:20:04
EP/ESE	*European Organization for Nuclear Research* *CH-1211 Genève 23 - Switzerland*	Sheet	7.7.5 of 79
	EDA-03518-V3-0	Size	A4
		Rev	-

8 to 1 multiplexer.
if EN then D=S[A]

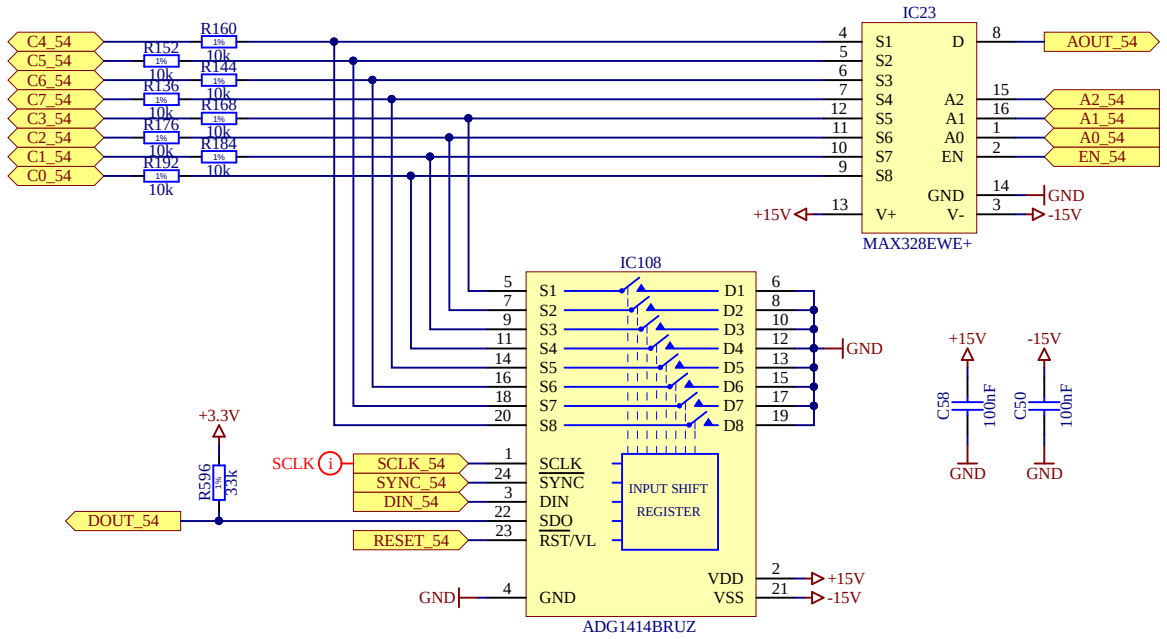

8 x SPST switch. The switches can be controlled independently.
Can be used to short (10 Ohm) each channel to ground (HVRET).

This feature is especially useful when leakage currents are not uniform between neighbor channels, having all channels shorted to the same potential prevents parasitic current flow between channels.

Copyright CERN 2019.

This documentation describes Open Hardware and is licensed under the CERN OHL v.1.2.

You may redistribute and modify this documentation under the terms of the CERN OHL v.1.2. (http://ohwr.org/CERNOHL). This documentation is distributed WITHOUT ANY EXPRESS OR IMPLIED WARRANTY, INCLUDING OF MERCHANTABILITY, SATISFACTORY QUALITY AND FITNESS FOR A PARTICULAR PURPOSE.
Please see the CERN OHL v.1.2 for applicable conditions.

Leakage estimation(@room temperature): 50pA
1)Source Off leakage of ADG1414:
- max 150pA (table 1, page 3, ADG1414 datasheet)
- typical 50pA for 10/-10V input voltages (table 1, page 3, ADG1414 datasheet)
- based on curves for similar switches, the leakage for input voltages close to 0V should be less than that
2) Drain of MAX328 with one channel selected
- max 10pA (page 2, MAX328 datasheet)
- typ 3pA (page 2, MAX328 datasheet)

Capacitance estimation: 20pF
1) Source of ADG1414, 8pF@1MHz typical (table 1, page 3, ADG1414 datasheet)
2) Channel of MAX328: not specified explicitly, but one may estimate it to be around 10pF@1MHz

Project/Equipment	HGC sensor probecard		
Document	**HGC sensor probecard 8 channels group**	Designer	Szymon Kulis
		Drawn by	Szymon Kulis 23/08/2016
		Check.by	JMW 21-10-2016
		Last Mod.	JMW 12/02/2019
		File	group8chn.SchDoc
		Print Date	14/03/2019 15:20:05
EP/ESE	*European Organization for Nuclear Research CH-1211 Genève 23 - Switzerland*	Sheet	7.7.6 of 79
	EDA-03518-V3-0	Size	A4
		Rev	-

8 to 1 multiplexer.
if EN then D=S[A]

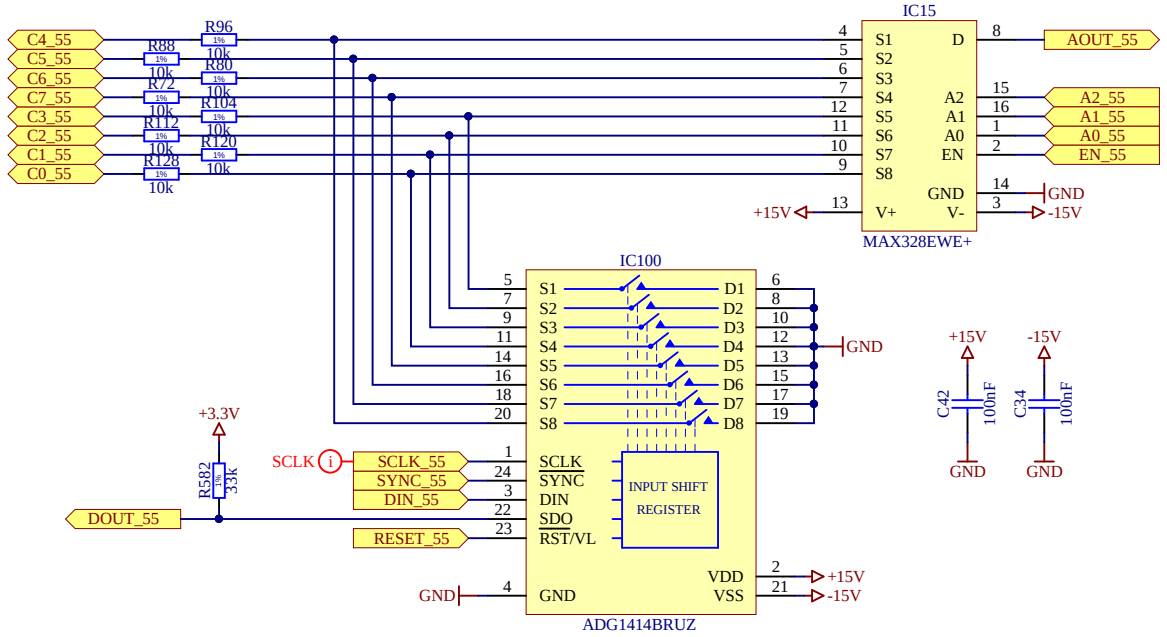

8 x SPST switch. The switches can be controlled independently.
Can be used to short (10 Ohm) each channel to ground (HVRET).

This feature is especially useful when leakage currents are not uniform between neighbor channels, having all channels shorted to the same potential prevents parasitic current flow between channels.

Leakage estimation(@room temperature): 50pA
1)Source Off leakage of ADG1414:
- max 150pA (table 1, page 3, ADG1414 datasheet)
- typical 50pA for 10/-10V input voltages (table 1, page 3, ADG1414 datasheet)
- based on curves for similar switches, the leakage for input voltages close to 0V should be less than that
2) Drain of MAX328 with one channel selected
- max 10pA (page 2, MAX328 datasheet)
- typ 3pA (page 2, MAX328 datasheet)

Capacitance estimation: 20pF
1) Source of ADG1414, 8pF@1MHz typical (table 1, page 3, ADG1414 datasheet)
2) Channel of MAX328: not specified explicitly, but one may estimate it to be around 10pF@1MHz

Copyright CERN 2019.

This documentation describes Open Hardware and is licensed under the CERN OHL v.1.2.

You may redistribute and modify this documentation under the terms of the CERN OHL v.1.2. (http://ohwr.org/CERNOHL). This documentation is distributed WITHOUT ANY EXPRESS OR IMPLIED WARRANTY, INCLUDING OF MERCHANTABILITY, SATISFACTORY QUALITY AND FITNESS FOR A PARTICULAR PURPOSE.
Please see the CERN OHL v.1.2 for applicable conditions.

Project/Equipment	HGC sensor probecard		
Document	**HGC sensor probecard 8 channels group**	Designer	Szymon Kulis
		Drawn by	Szymon Kulis 23/08/2016
		Check.by	JMW 21-10-2016
		Last Mod.	JMW 12/02/2019
		File	group8chn.SchDoc
		Print Date	14/03/2019 15:20:05
		Sheet	7 of 79
EP/ESE	*European Organization for Nuclear Research* *CH-1211 Genève 23 - Switzerland*	EDA-03518-V3-0	Size A4 Rev -

8 to 1 multiplexer.
if EN then D=S[A]

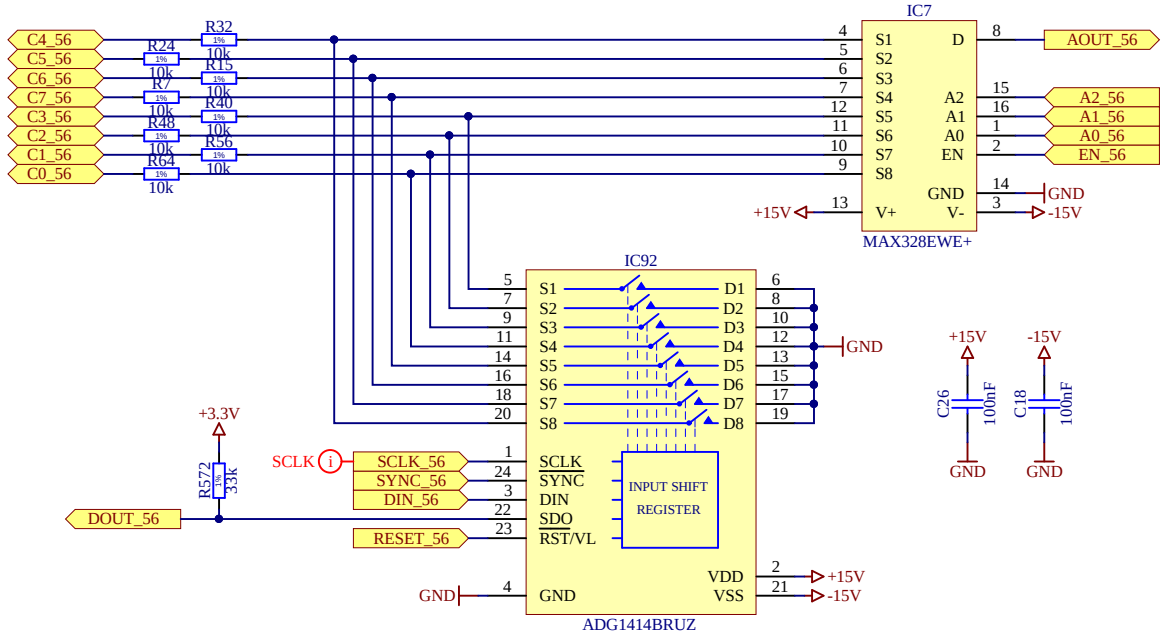

8 x SPST switch. The switches can be controlled independently.
Can be used to short (10 Ohm) each channel to ground (HVRET).

This feature is especially useful when leakage currents are not uniform between neighbor channels, having all channels shorted to the same potential prevents parasitic current flow between channels.

Leakage estimation(@room temperature): 50pA
1)Source Off leakage of ADG1414:
- max 150pA (table 1, page 3, ADG1414 datasheet)
- typical 50pA for 10/-10V input voltages (table 1, page 3, ADG1414 datasheet)
- based on curves for similar switches, the leakage for input voltages close to 0V should be less than that
2) Drain of MAX328 with one channel selected
- max 10pA (page 2, MAX328 datasheet)
- typ 3pA (page 2, MAX328 datasheet)

Capacitance estimation: 20pF
1) Source of ADG1414, 8pF@1MHz typical (table 1, page 3, ADG1414 datasheet)
2) Channel of MAX328: not specified explicitly, but one may estimate it to be around 10pF@1MHz

Copyright CERN 2019.

This documentation describes Open Hardware and is licensed under the CERN OHL v.1.2.

You may redistribute and modify this documentation under the terms of the CERN OHL v.1.2. (http://ohwr.org/CERNOHL). This documentation is distributed WITHOUT ANY EXPRESS OR IMPLIED WARRANTY, INCLUDING OF MERCHANTABILITY, SATISFACTORY QUALITY AND FITNESS FOR A PARTICULAR PURPOSE.
Please see the CERN OHL v.1.2 for applicable conditions.

Project/Equipment	HGC sensor probecard		
Document	**HGC sensor probecard 8 channels group**	Designer	Szymon Kulis
		Drawn by	Szymon Kulis 23/08/2016
		Check.by	JMW 21-10-2016
		Last Mod.	JMW 12/02/2019
		File	group8chn.SchDoc
		Print Date	14/03/2019 15:20:06
		Sheet	7.7.8 of 79
EP/ESE	*European Organization for Nuclear Research CH-1211 Genève 23 - Switzerland*	EDA-03518-V3-0	Size A4 Rev -

8 to 1 multiplexer.
if EN then D=S[A]

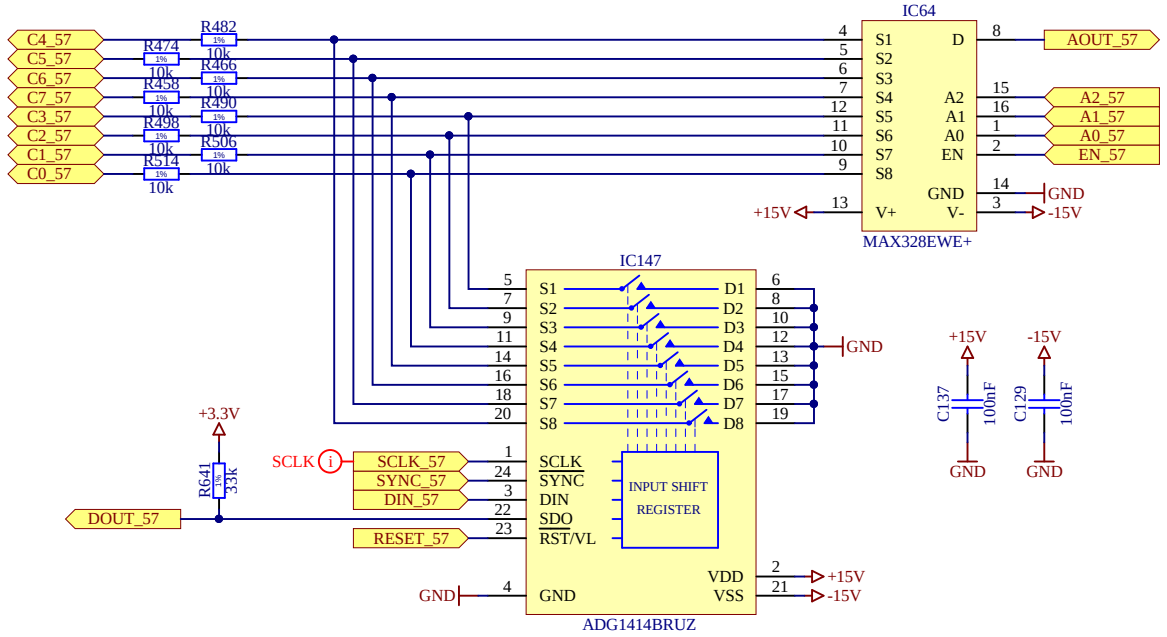

8 x SPST switch. The switches can be controlled independently.
Can be used to short (10 Ohm) each channel to ground (HVRET).

This feature is especially useful when leakage currents are not uniform between neighbor channels, having all channels shorted to the same potential prevents parasitic current flow between channels.

Leakage estimation(@room temperature): 50pA
1)Source Off leakage of ADG1414:
- max 150pA (table 1, page 3, ADG1414 datasheet)
- typical 50pA for 10/-10V input voltages (table 1, page 3, ADG1414 datasheet)
- based on curves for similar switches, the leakage for input voltages close to 0V should be less than that
2) Drain of MAX328 with one channel selected
- max 10pA (page 2, MAX328 datasheet)
- typ 3pA (page 2, MAX328 datasheet)

Capacitance estimation: 20pF
1) Source of ADG1414, 8pF@1MHz typical (table 1, page 3, ADG1414 datasheet)
2) Channel of MAX328: not specified explicitly, but one may estimate it to be around 10pF@1MHz

Copyright CERN 2019.

This documentation describes Open Hardware and is licensed under the CERN OHL v.1.2.

You may redistribute and modify this documentation under the terms of the CERN OHL v.1.2. (http://ohwr.org/CERNOHL). This documentation is distributed WITHOUT ANY EXPRESS OR IMPLIED WARRANTY, INCLUDING OF MERCHANTABILITY, SATISFACTORY QUALITY AND FITNESS FOR A PARTICULAR PURPOSE.
Please see the CERN OHL v.1.2 for applicable conditions.

Project/Equipment	HGC sensor probecard		
Document	**HGC sensor probecard 8 channels group**	Designer	Szymon Kulis
		Drawn by	Szymon Kulis 23/08/2016
		Check.by	JMW 21-10-2016
		Last Mod.	JMW 12/02/2019
		File	group8chn.SchDoc
		Print Date	14/03/2019 15:20:06

EP/ESE

European Organization for Nuclear Research
CH-1211 Genève 23 - Switzerland

EDA-03518-V3-0

Sheet 7.8.bf 79

Size A4 | Rev -

8 to 1 multiplexer.
if EN then D=S[A]

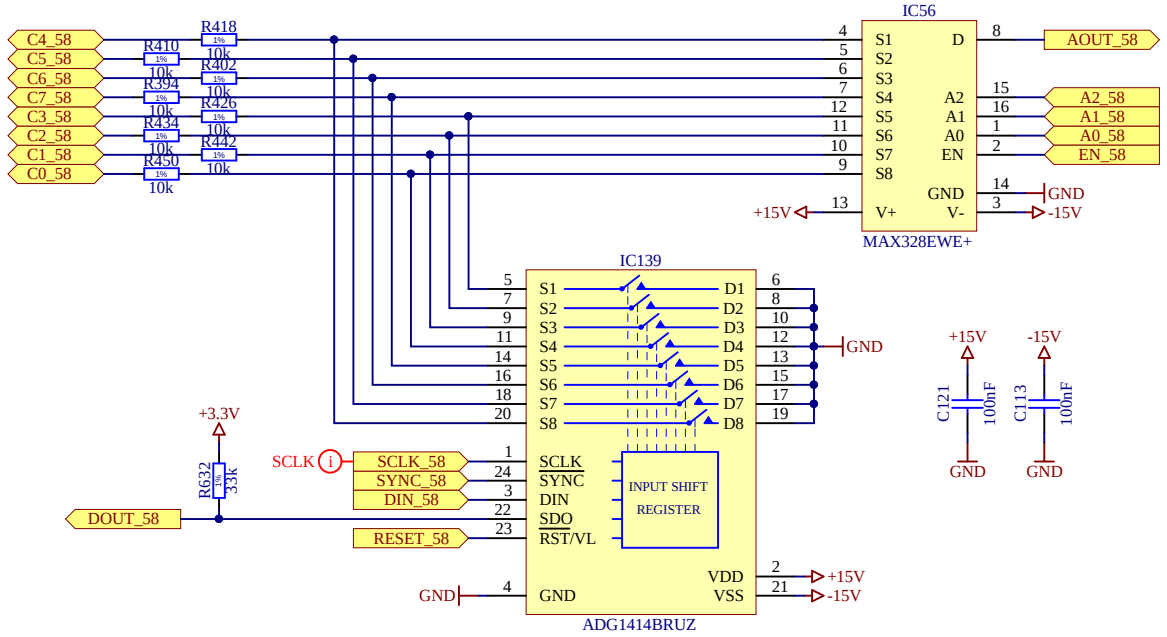

8 x SPST switch. The switches can be controlled independently.
Can be used to short (10 Ohm) each channel to ground (HVRET).

This feature is especially useful when leakage currents are not uniform between neighbor channels, having all channels shorted to the same potential prevents parasitic current flow between channels.

Leakage estimation(@room temperature): 50pA
1)Source Off leakage of ADG1414:
- max 150pA (table 1, page 3, ADG1414 datasheet)
- typical 50pA for 10/-10V input voltages (table 1, page 3, ADG1414 datasheet)
- based on curves for similar switches, the leakage for input voltages close to 0V should be less than that
2) Drain of MAX328 with one channel selected
- max 10pA (page 2, MAX328 datasheet)
- typ 3pA (page 2, MAX328 datasheet)

Capacitance estimation: 20pF
1) Source of ADG1414, 8pF@1MHz typical (table 1, page 3, ADG1414 datasheet)
2) Channel of MAX328: not specified explicitly, but one may estimate it to be around 10pF@1MHz

Copyright CERN 2019.

This documentation describes Open Hardware and is licensed under the CERN OHL v.1.2.

You may redistribute and modify this documentation under the terms of the CERN OHL v.1.2. (http://ohwr.org/CERNOHL). This documentation is distributed WITHOUT ANY EXPRESS OR IMPLIED WARRANTY, INCLUDING OF MERCHANTABILITY, SATISFACTORY QUALITY AND FITNESS FOR A PARTICULAR PURPOSE.
Please see the CERN OHL v.1.2 for applicable conditions.

Project/Equipment	HGC sensor probecard		
Document	**HGC sensor probecard 8 channels group**	Designer	Szymon Kulis
		Drawn by	Szymon Kulis 23/08/2016
		Check.by	JMW 21-10-2016
		Last Mod.	JMW 12/02/2019
		File	group8chn.SchDoc
		Print Date	14/03/2019 15:20:07

EP/ESE

European Organization for Nuclear Research
CH-1211 Genève 23 - Switzerland

EDA-03518-V3-0

Size A4 | Rev -

8 to 1 multiplexer.
if EN then D=S[A]

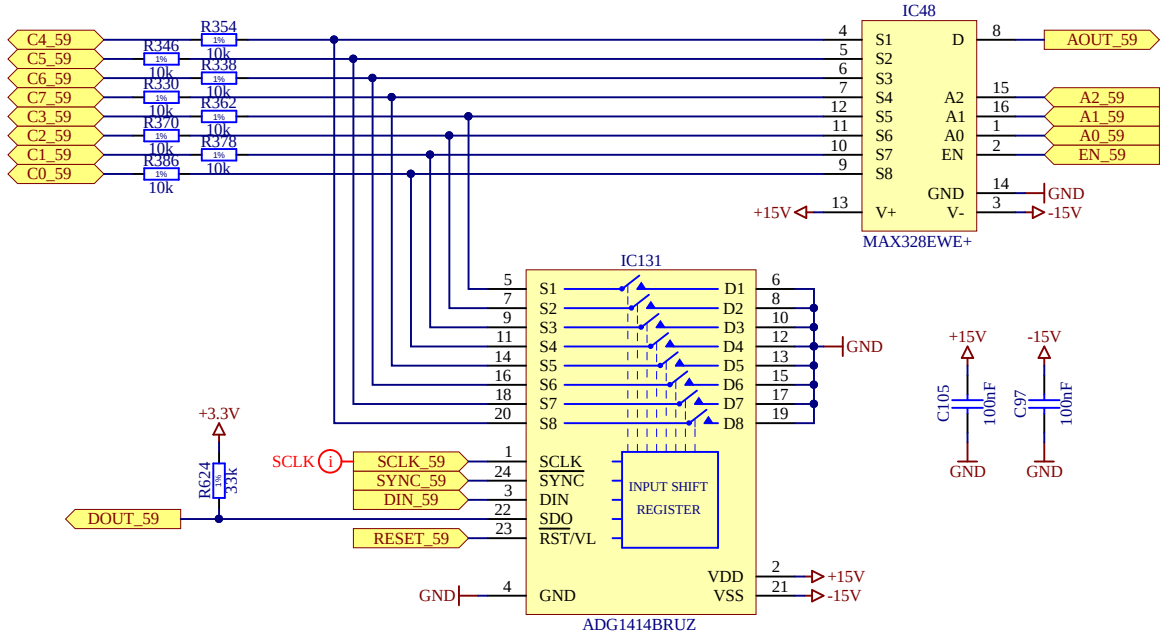

8 x SPST switch. The switches can be controlled independently.
Can be used to short (10 Ohm) each channel to ground (HVRET).

This feature is especially useful when leakage currents are not uniform between neighbor channels, having all channels shorted to the same potential prevents parasitic current flow between channels.

Leakage estimation(@room temperature): 50pA
1)Source Off leakage of ADG1414:
- max 150pA (table 1, page 3, ADG1414 datasheet)
- typical 50pA for 10/-10V input voltages (table 1, page 3, ADG1414 datasheet)
- based on curves for similar switches, the leakage for input voltages close to 0V should be less than that
2) Drain of MAX328 with one channel selected
- max 10pA (page 2, MAX328 datasheet)
- typ 3pA (page 2, MAX328 datasheet)

Capacitance estimation: 20pF
1) Source of ADG1414, 8pF@1MHz typical (table 1, page 3, ADG1414 datasheet)
2) Channel of MAX328: not specified explicitly, but one may estimate it to be around 10pF@1MHz

Copyright CERN 2019.

This documentation describes Open Hardware and is licensed under the CERN OHL v.1.2.

You may redistribute and modify this documentation under the terms of the CERN OHL v.1.2. (http://ohwr.org/CERNOHL). This documentation is distributed WITHOUT ANY EXPRESS OR IMPLIED WARRANTY, INCLUDING OF MERCHANTABILITY, SATISFACTORY QUALITY AND FITNESS FOR A PARTICULAR PURPOSE.
Please see the CERN OHL v.1.2 for applicable conditions.

Project/Equipment	HGC sensor probecard		
Document	**HGC sensor probecard 8 channels group**	Designer	Szymon Kulis
		Drawn by	Szymon Kulis 23/08/2016
		Check.by	JMW 21-10-2016
		Last Mod.	JMW 12/02/2019
		File	group8chn.SchDoc
		Print Date	14/03/2019 15:20:07

EP/ESE

European Organization for Nuclear Research
CH-1211 Genève 23 - Switzerland

EDA-03518-V3-0

Size A4 | Rev -

8 to 1 multiplexer.
if EN then D=S[A]

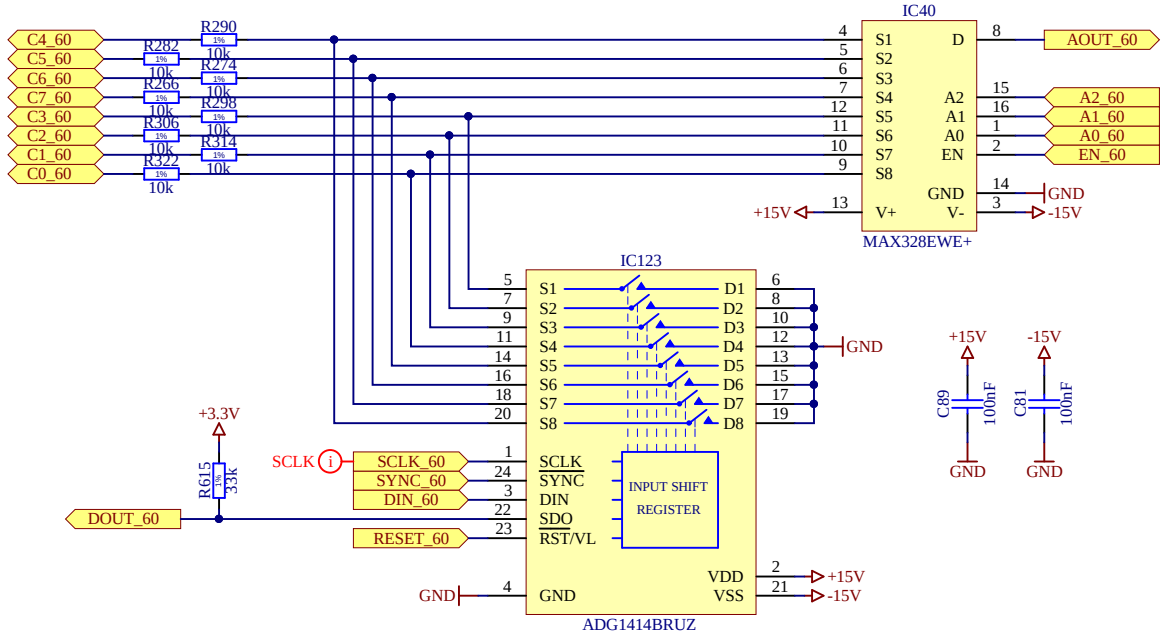

8 x SPST switch. The switches can be controlled independently.
Can be used to short (10 Ohm) each channel to ground (HVRET).

This feature is especially useful when leakage currents are not uniform between neighbor channels, having all channels shorted to the same potential prevents parasitic current flow between channels.

Leakage estimation(@room temperature): 50pA
1)Source Off leakage of ADG1414:
- max 150pA (table 1, page 3, ADG1414 datasheet)
- typical 50pA for 10/-10V input voltages (table 1, page 3, ADG1414 datasheet)
- based on curves for similar switches, the leakage for input voltages close to 0V should be less than that
2) Drain of MAX328 with one channel selected
- max 10pA (page 2, MAX328 datasheet)
- typ 3pA (page 2, MAX328 datasheet)

Capacitance estimation: 20pF
1) Source of ADG1414, 8pF@1MHz typical (table 1, page 3, ADG1414 datasheet)
2) Channel of MAX328: not specified explicitly, but one may estimate it to be around 10pF@1MHz

Copyright CERN 2019.

This documentation describes Open Hardware and is licensed under the CERN OHL v.1.2.

You may redistribute and modify this documentation under the terms of the CERN OHL v.1.2. (http://ohwr.org/CERNOHL). This documentation is distributed WITHOUT ANY EXPRESS OR IMPLIED WARRANTY, INCLUDING OF MERCHANTABILITY, SATISFACTORY QUALITY AND FITNESS FOR A PARTICULAR PURPOSE.
Please see the CERN OHL v.1.2 for applicable conditions.

Project/Equipment	HGC sensor probecard		
Document	**HGC sensor probecard 8 channels group**	Designer	Szymon Kulis
		Drawn by	Szymon Kulis 23/08/2016
		Check.by	JMW 21-10-2016
		Last Mod.	JMW 12/02/2019
		File	group8chn.SchDoc
		Print Date	14/03/2019 15:20:08

EP/ESE

European Organization for Nuclear Research
CH-1211 Genève 23 - Switzerland

EDA-03518-V3-0 | Size A4 | Rev -

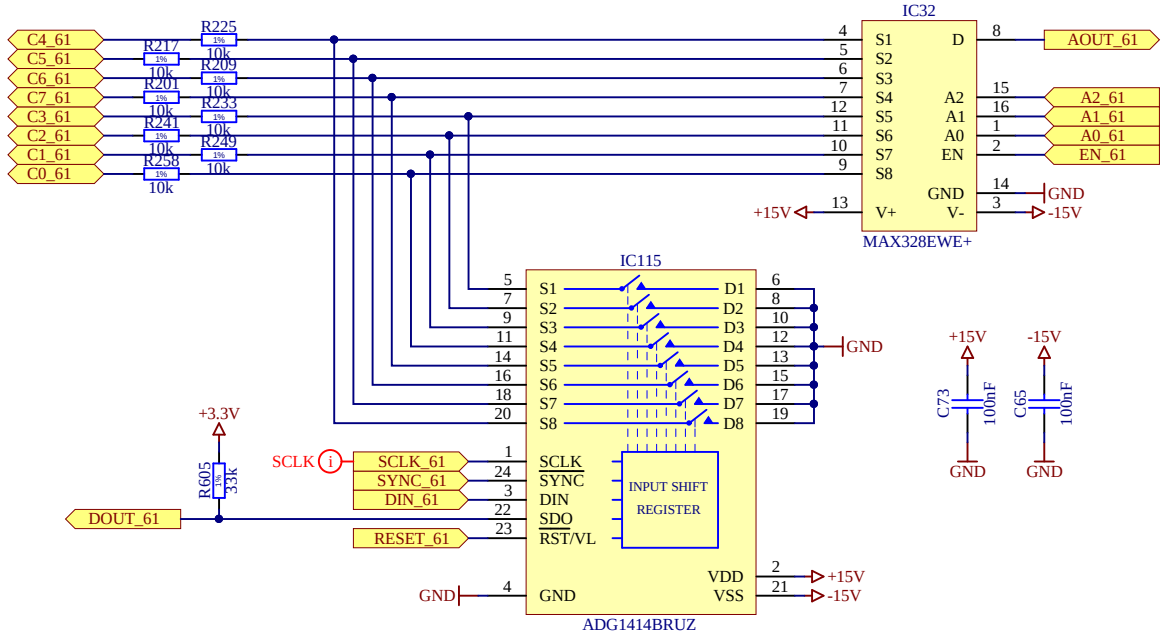

8 x SPST switch. The switches can be controlled independently.
Can be used to short (10 Ohm) each channel to ground (HVRET).

This feature is especially useful when leakage currents are not uniform between neighbor channels, having all channels shorted to the same potential prevents parasitic current flow between channels.

Leakage estimation(@room temperature): 50pA
1)Source Off leakage of ADG1414:
- max 150pA (table 1, page 3, ADG1414 datasheet)
- typical 50pA for 10/-10V input voltages (table 1, page 3, ADG1414 datasheet)
- based on curves for similar switches, the leakage for input voltages close to 0V should be less than that
2) Drain of MAX328 with one channel selected
- max 10pA (page 2, MAX328 datasheet)
- typ 3pA (page 2, MAX328 datasheet)

Capacitance estimation: 20pF
1) Source of ADG1414, 8pF@1MHz typical (table 1, page 3, ADG1414 datasheet)
2) Channel of MAX328: not specified explicitly, but one may estimate it to be around 10pF@1MHz

Copyright CERN 2019.

This documentation describes Open Hardware and is licensed under the CERN OHL v.1.2.

You may redistribute and modify this documentation under the terms of the CERN OHL v.1.2. (http://ohwr.org/CERNOHL). This documentation is distributed WITHOUT ANY EXPRESS OR IMPLIED WARRANTY, INCLUDING OF MERCHANTABILITY, SATISFACTORY QUALITY AND FITNESS FOR A PARTICULAR PURPOSE.
Please see the CERN OHL v.1.2 for applicable conditions.

Project/Equipment	HGC sensor probecard		
Document	**HGC sensor probecard 8 channels group**	Designer	Szymon Kulis
		Drawn by	Szymon Kulis 23/08/2016
		Check.by	JMW 21-10-2016
		Last Mod.	JMW 12/02/2019
		File	group8chn.SchDoc
		Print Date	14/03/2019 15:20:08 Sheet 7.8.5 of 79
EP/ESE CERN	European Organization for Nuclear Research CH-1211 Genève 23 - Switzerland	EDA-03518-V3-0	Size A4 Rev -

8 to 1 multiplexer.
if EN then D=S[A]

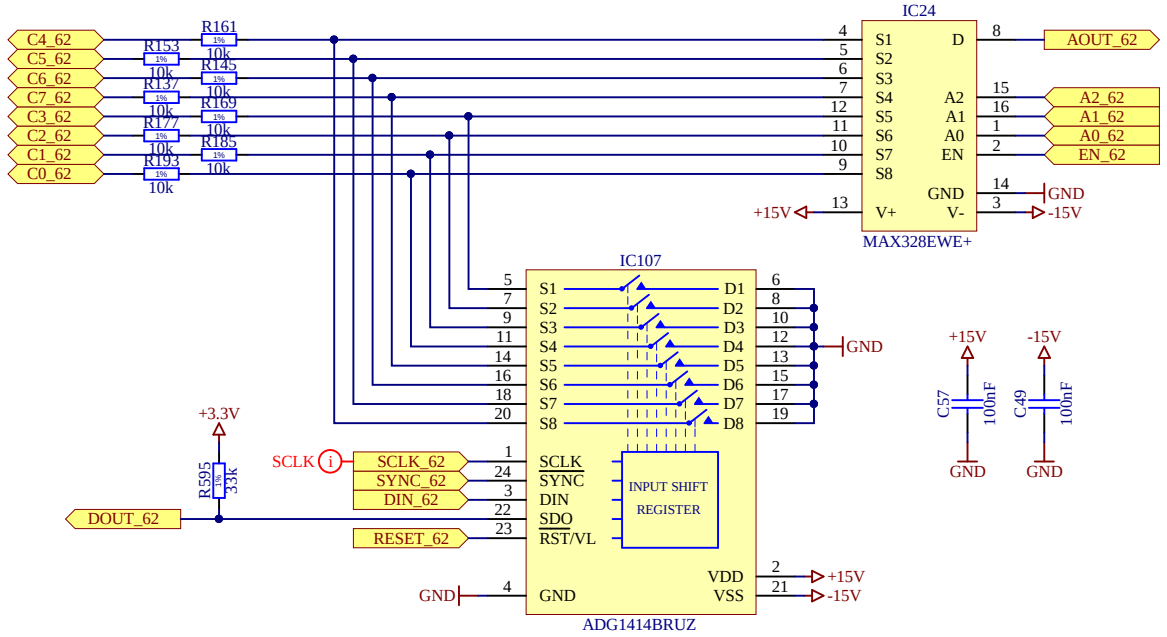

8 x SPST switch. The switches can be controlled independently.
Can be used to short (10 Ohm) each channel to ground (HVRET).

This feature is especially useful when leakage currents are not uniform between neighbor channels, having all channels shorted to the same potential prevents parasitic current flow between channels.

Copyright CERN 2019.

This documentation describes Open Hardware and is licensed under the CERN OHL v.1.2.

You may redistribute and modify this documentation under the terms of the CERN OHL v.1.2. (http://ohwr.org/CERNOHL). This documentation is distributed WITHOUT ANY EXPRESS OR IMPLIED WARRANTY, INCLUDING OF MERCHANTABILITY, SATISFACTORY QUALITY AND FITNESS FOR A PARTICULAR PURPOSE.
Please see the CERN OHL v.1.2 for applicable conditions.

Leakage estimation(@room temperature): 50pA
1)Source Off leakage of ADG1414:
- max 150pA (table 1, page 3, ADG1414 datasheet)
- typical 50pA for 10/-10V input voltages (table 1, page 3, ADG1414 datasheet)
- based on curves for similar switches, the leakage for input voltages close to 0V should be less than that
2) Drain of MAX328 with one channel selected
- max 10pA (page 2, MAX328 datasheet)
- typ 3pA (page 2, MAX328 datasheet)

Capacitance estimation: 20pF
1) Source of ADG1414, 8pF@1MHz typical (table 1, page 3, ADG1414 datasheet)
2) Channel of MAX328: not specified explicitly, but one may estimate it to be around 10pF@1MHz

Project/Equipment	HGC sensor probecard		
Document	**HGC sensor probecard 8 channels group**	Designer	Szymon Kulis
		Drawn by	Szymon Kulis 23/08/2016
		Check.by	JMW 21-10-2016
		Last Mod.	JMW 12/02/2019
		File	group8chn.SchDoc
		Print Date	14/03/2019 15:20:09
EP/ESE	*European Organization for Nuclear Research* *CH-1211 Genève 23 - Switzerland*	Sheet	7.8.6 of 79
	EDA-03518-V3-0	Size	A4
		Rev	-

8 to 1 multiplexer.
if EN then D=S[A]

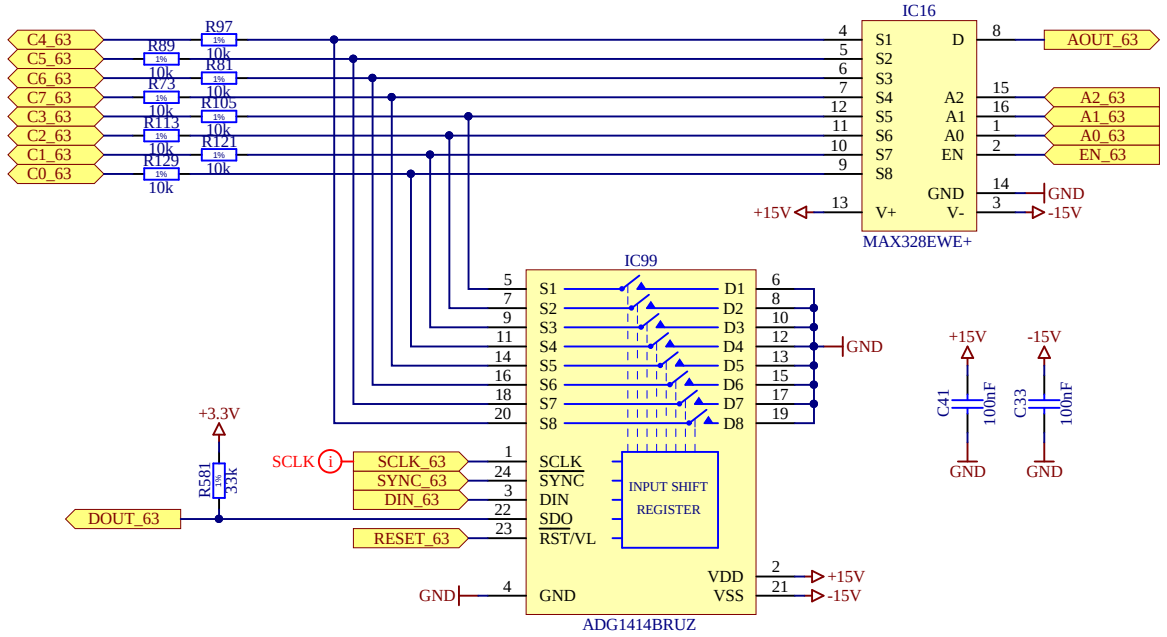

8 x SPST switch. The switches can be controlled independently.
Can be used to short (10 Ohm) each channel to ground (HVRET).

This feature is especially useful when leakage currents are not uniform between neighbor channels, having all channels shorted to the same potential prevents parasitic current flow between channels.

Copyright CERN 2019.

This documentation describes Open Hardware and is licensed under the CERN OHL v.1.2.

You may redistribute and modify this documentation under the terms of the CERN OHL v.1.2. (http://ohwr.org/CERNOHL). This documentation is distributed WITHOUT ANY EXPRESS OR IMPLIED WARRANTY, INCLUDING OF MERCHANTABILITY, SATISFACTORY QUALITY AND FITNESS FOR A PARTICULAR PURPOSE.
Please see the CERN OHL v.1.2 for applicable conditions.

Leakage estimation(@room temperature): 50pA
1)Source Off leakage of ADG1414:
- max 150pA (table 1, page 3, ADG1414 datasheet)
- typical 50pA for 10/-10V input voltages (table 1, page 3, ADG1414 datasheet)
- based on curves for similar switches, the leakage for input voltages close to 0V should be less than that
2) Drain of MAX328 with one channel selected
- max 10pA (page 2, MAX328 datasheet)
- typ 3pA (page 2, MAX328 datasheet)

Capacitance estimation: 20pF
1) Source of ADG1414, 8pF@1MHz typical (table 1, page 3, ADG1414 datasheet)
2) Channel of MAX328: not specified explicitly, but one may estimate it to be around 10pF@1MHz

Project/Equipment	HGC sensor probecard		
Document	**HGC sensor probecard 8 channels group**	Designer	Szymon Kulis
		Drawn by	Szymon Kulis 23/08/2016
		Check.by	JMW 21-10-2016
		Last Mod.	JMW 12/02/2019
		File	group8chn.SchDoc
		Print Date	14/03/2019 15:20:09
		Sheet	7.8.7 of 79
EP/ESE	European Organization for Nuclear Research, CH-1211 Genève 23 - Switzerland	EDA-03518-V3-0	Size A4, Rev -

8 to 1 multiplexer.
if EN then D=S[A]

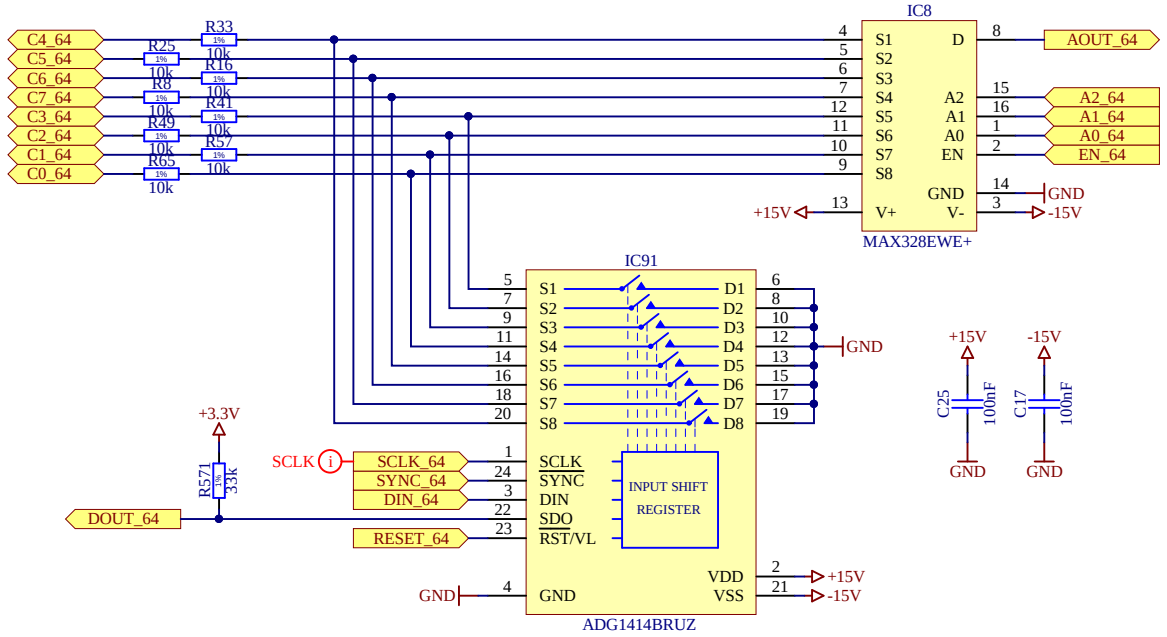

8 x SPST switch. The switches can be controlled independently.
Can be used to short (10 Ohm) each channel to ground (HVRET).

This feature is especially useful when leakage currents are not uniform between neighbor channels, having all channels shorted to the same potential prevents parasitic current flow between channels.

Copyright CERN 2019.

This documentation describes Open Hardware and is licensed under the CERN OHL v.1.2.

You may redistribute and modify this documentation under the terms of the CERN OHL v.1.2. (http://ohwr.org/CERNOHL). This documentation is distributed WITHOUT ANY EXPRESS OR IMPLIED WARRANTY, INCLUDING OF MERCHANTABILITY, SATISFACTORY QUALITY AND FITNESS FOR A PARTICULAR PURPOSE.
Please see the CERN OHL v.1.2 for applicable conditions.

Leakage estimation(@room temperature): 50pA
1)Source Off leakage of ADG1414:
- max 150pA (table 1, page 3, ADG1414 datasheet)
- typical 50pA for 10/-10V input voltages (table 1, page 3, ADG1414 datasheet)
- based on curves for similar switches, the leakage for input voltages close to 0V should be less than that
2) Drain of MAX328 with one channel selected
- max 10pA (page 2, MAX328 datasheet)
- typ 3pA (page 2, MAX328 datasheet)

Capacitance estimation: 20pF
1) Source of ADG1414, 8pF@1MHz typical (table 1, page 3, ADG1414 datasheet)
2) Channel of MAX328: not specified explicitly, but one may estimate it to be around 10pF@1MHz

Project/Equipment	HGC sensor probecard		
Document	**HGC sensor probecard 8 channels group**	Designer	Szymon Kulis
		Drawn by	Szymon Kulis 23/08/2016
		Check.by	JMW 21-10-2016
		Last Mod.	JMW 12/02/2019
		File	group8chn.SchDoc
		Print Date	14/03/2019 15:20:10
		Sheet	7.8.8 of 79
EP/ESE	European Organization for Nuclear Research CH-1211 Genève 23 - Switzerland	EDA-03518-V3-0	Size A4 Rev -

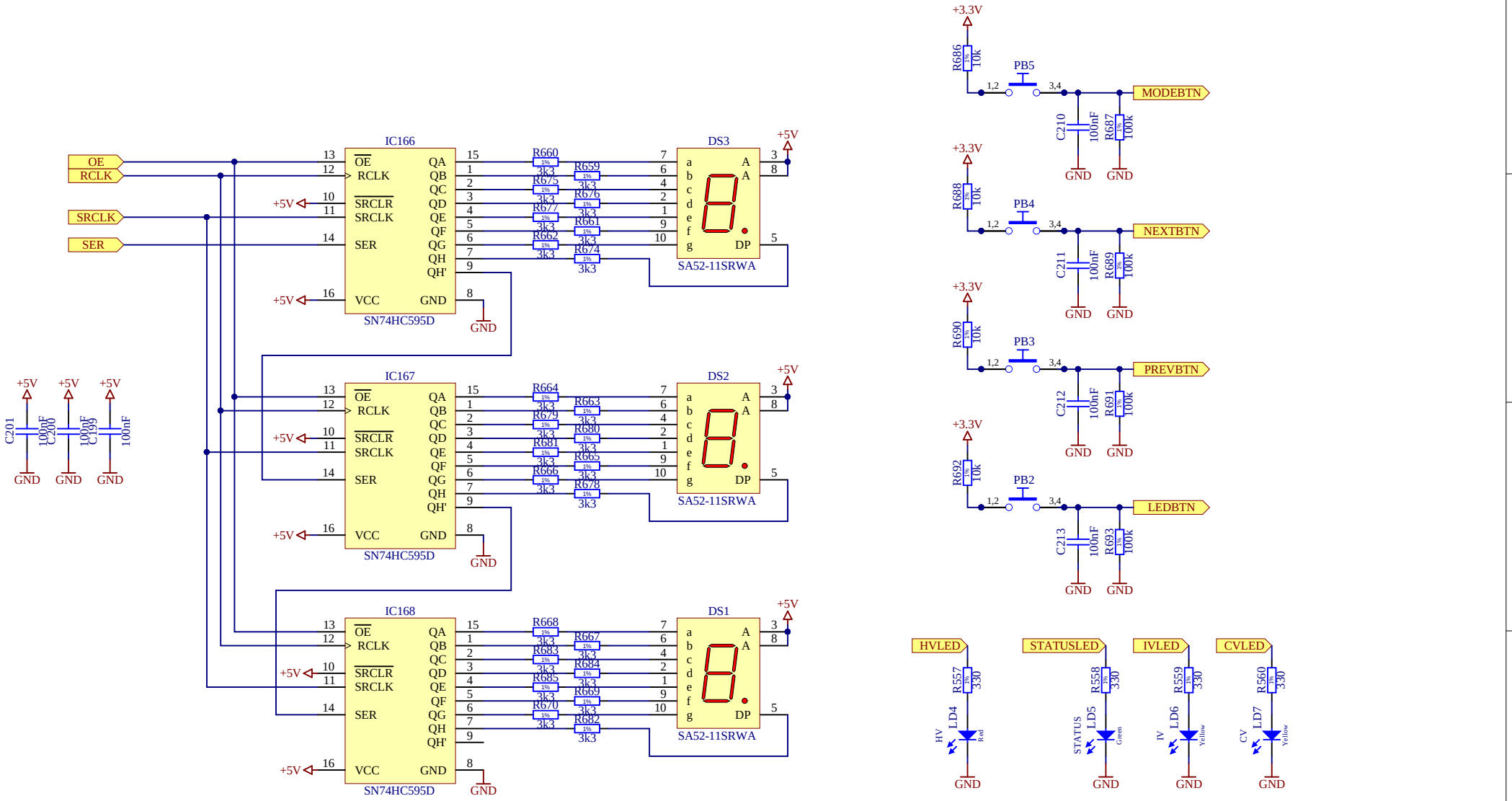

Copyright CERN 2019.

This documentation describes Open Hardware and is licensed under the CERN OHL v.1.2.

You may redistribute and modify this documentation under the terms of the CERN OHL v.1.2. (http://ohwr.org/CERNOHL). This documentation is distributed WITHOUT ANY EXPRESS OR IMPLIED WARRANTY, INCLUDING OF MERCHANTABILITY, SATISFACTORY QUALITY AND FITNESS FOR A PARTICULAR PURPOSE.
Please see the CERN OHL v.1.2 for applicable conditions.

Project/Equipment: HGC sensor probecard

Document

EP/ESE

HGC sensor probecard
User interface

Designer	Szymon Kulis	
Drawn by	Szymon Kulis	24/08/2016
Check.by	JMW	21-10-2016
Last Mod.	JMW	12/02/2019
File	display.SchDoc	
Print Date	14/03/2019 15:20:11	Sheet 8 of 79

European Organization for Nuclear Research
CH-1211 Genève 23 - Switzerland

EDA-03518-V3-0

Size A4 | Rev -

HGC sensor probecard

1) Channels: 136 (+ 8 calibration channels)
2) Leakage current : < 100pA
3) Parasitic capacitance : 50pF
4) Connectivity:
   - HV (2xtriax)
   - precise current meter (2xtriax)
   - LCR meter (4xBNC)
   - PC control (isolated USB)
5) User interface:
   - USB control for automatic measurements
   - status LEDs (HV on/off, measurement type, general status, USB communication) and 7 segment display (active channel)
   - micro-switches for next/previous channel (manual lab testing and debugging)
6) Current to voltage converter
7) On board 12 bit ADC (10 bit effective resolution)
   can be used for fast PASS/FAIL characterization when great precision is not required

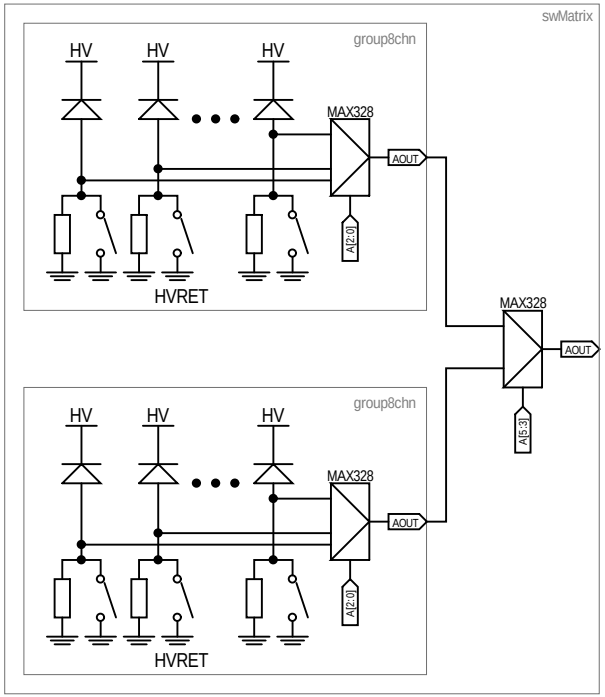

This is only high level sketch of system architecture. For the detailed implementation please check following pages.

Copyright CERN 2019.

This documentation describes Open Hardware and is licensed under the CERN OHL v.1.2.

You may redistribute and modify this documentation under the terms of the CERN OHL v.1.2. (http://ohwr.org/CERNOHL). This documentation is distributed WITHOUT ANY EXPRESS OR IMPLIED WARRANTY, INCLUDING OF MERCHANTABILITY, SATISFACTORY QUALITY AND FITNESS FOR A PARTICULAR PURPOSE.
Please see the CERN OHL v.1.2 for applicable conditions.

Project/Equipment	HGC sensor probecard		
Document	HGC sensor probecard		
		Designer	Szymon Kulis
		Drawn by	Szymon Kulis 23/08/2016
		Check.by	JMW 21-10-2016
		Last Mod.	JMW 12/02/2019
		File	info.SchDoc
		Print Date	14/03/2019 15:20:11 Sheet 9 of 79

EP/ESE

European Organization for Nuclear Research
CH-1211 Genève 23 - Switzerland

EDA-03518-V3-0

Size A4 | Rev -