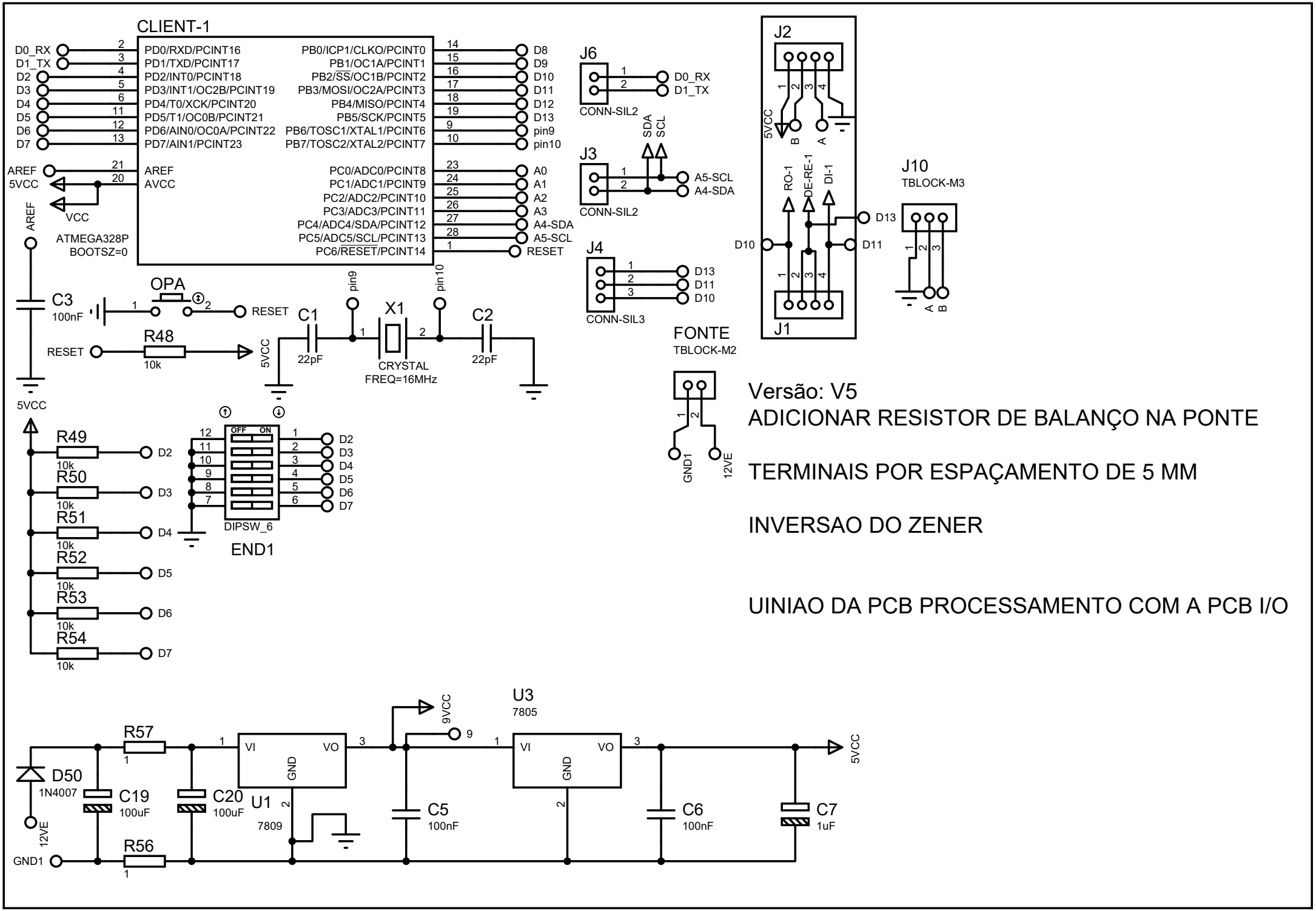
CLIENT-1
D0_RX
D1_TX
D2
D3
D4
D5
D6
D7
AREF
5VCC
VCC
ATMEGA328P
BOOTSZ=0
PD0/RXD/PCINT16
PD1/TXD/PCINT17
PD2/INT0/PCINT18
PD3/INT1/OC2B/PCINT19
PD4/T0/XCK/PCINT20
PD5/T1/OC0B/PCINT21
PD6/AIN0/OC0A/PCINT22
PD7/AIN1/PCINT23
AREF
AVCC
PB0/ICP1/CLKO/PCINT0
PB1/OC1A/PCINT1
PB2/SS/OC1B/PCINT2
PB3/MOSI/OC2A/PCINT3
PB4/MISO/PCINT4
PB5/SCK/PCINT5
PB6/TOSC1/XTAL1/PCINT6
PB7/TOSC2/XTAL2/PCINT7
PC0/ADC0/PCINT8
PC1/ADC1/PCINT9
PC2/ADC2/PCINT10
PC3/ADC3/PCINT11
PC4/ADC4/SDA/PCINT12
PC5/ADC5/SCL/PCINT13
PC6/RESET/PCINT14
D8
D9
D10
D11
D12
D13
pin9
pin10
A0
A1
A2
A3
A4-SDA
A5-SCL
RESET
J6
CONN-SIL2
D0_RX
D1_TX
J3
CONN-SIL2
SDA
SCL
A5-SCL
A4-SDA
J4
CONN-SIL3
D13
D11
D10
J2
J1
5VCC
B
A
RO-1
DE-RE-1
DI-1
D13
D10
D11
J10
TBLOCK-M3
A
B
C3
100nF
OPA
RESET
R48
10k
RESET
5VCC
C1
22pF
pin9
X1
CRYSTAL
FREQ=16MHz
pin10
C2
22pF
FONTE
TBLOCK-M2
GND1
12VE
5VCC
R49
10k
R50
10k
R51
10k
R52
10k
R53
10k
R54
10k
D2
D3
D4
D5
D6
D7
OFF
ON
DIPSW_6
END1
Versão: V5
ADICIONAR RESISTOR DE BALANÇO NA PONTE
TERMINAIS POR ESPAÇAMENTO DE 5 MM
INVERSAO DO ZENER
UINIAO DA PCB PROCESSAMENTO COM A PCB I/O
D50
1N4007
12VE
GND1
R57
R56
C19
100uF
C20
100uF
U1
7809
VI
VO
GND
9VCC
C5
100nF
U3
7805
VI
VO
GND
C6
100nF
C7
1uF
5VCC