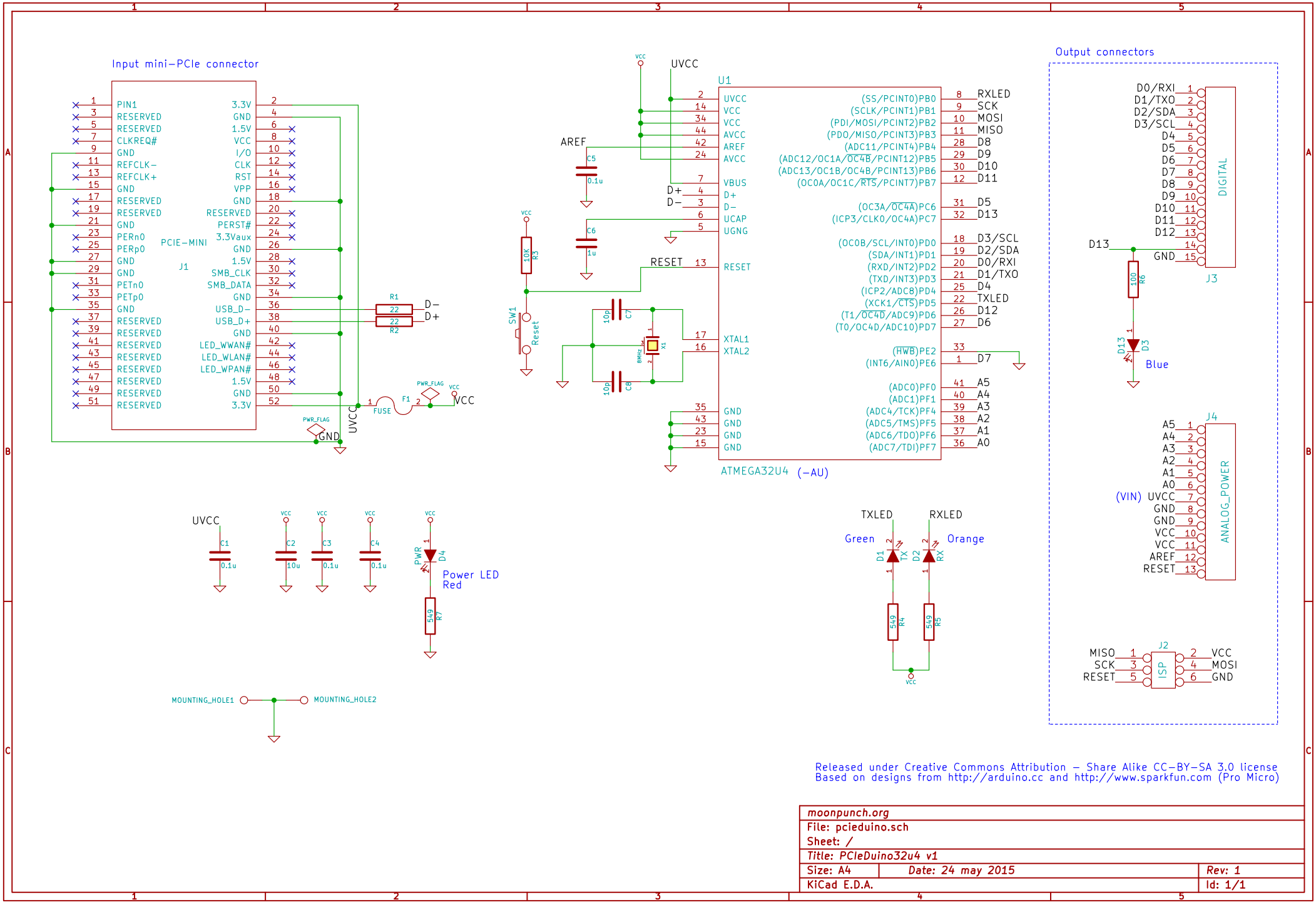

Released under Creative Commons Attribution – Share Alike CC-BY-SA 3.0 license
Based on designs from http://arduino.cc and http://www.sparkfun.com (Pro Micro)

moonpunch.org		
File: pcieduino.sch		
Sheet: /		
Title: PCIeDuino32u4 v1		
Size: A4	Date: 24 may 2015	Rev: 1
KiCad E.D.A.		Id: 1/1