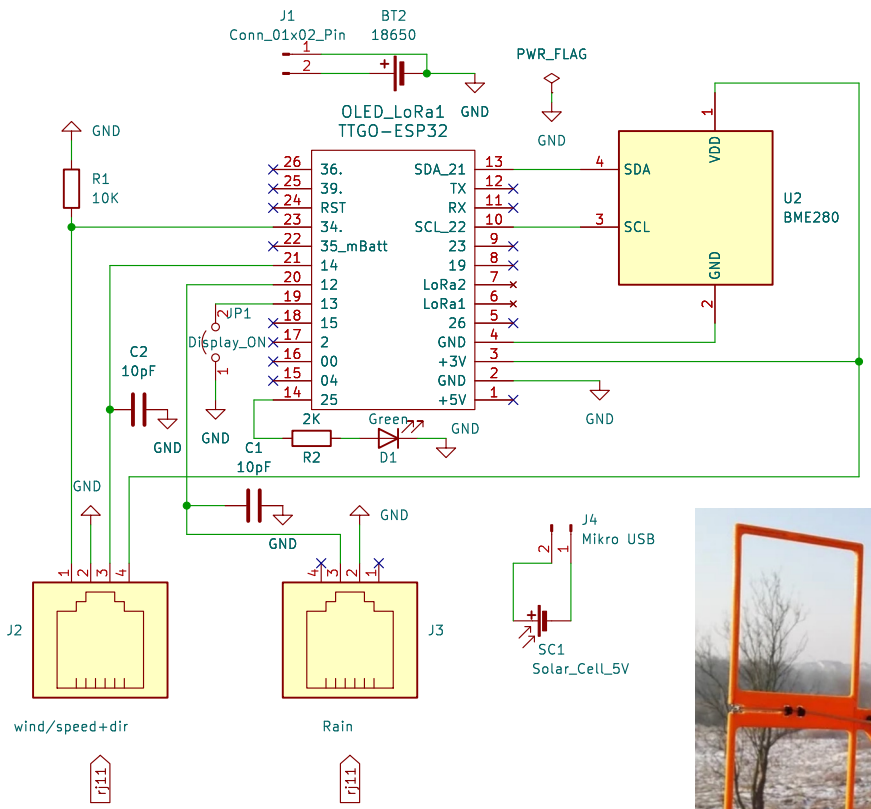

sma

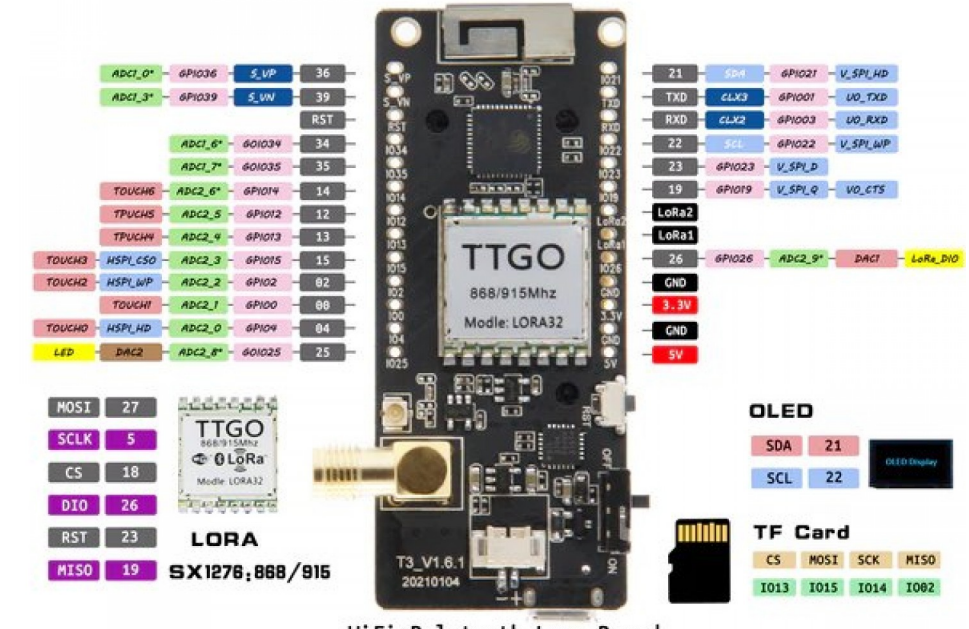

WiFi+Buletooth Lora Board
LILYGO T3_V1.6.1

rj11

směr	odpor	ADC
W 270°	1k	<250
NW 315°	2K	<550
N 369°	4k	<900
SW 225°	8K	<1600
NE 45°	16K	<2200
S 180°	32K	<2900
SE 135°	64k	<3400
E 90°	128k	<3900

RJ11

1 WindDirection	1 n/c
2 GND	2 GND
3 WindSpeed	3 rain
4 Power	4 n/c
wind/speed+dir	Rain

Vlada OK1FET JO70GB Praha

Sheet: /

File: fet-wx.kicad_sch

Title: * FET-MET *** LoRa APRS metostation**

Size: A4	Date:	Rev: 0.9
KiCad E.D.A. kicad 7.0.11+dfsg-1build4		Id: 1/1