EECS4641: Introduction to Medical Devices

Lecture 1 (Introduction)

Ebrahem Ghafar-Zadeh

Dept. of Electrical Engineering and Computer Science

York University, Jan. 4th 2016

Why EECS4641?

- **Hot topics of research with Great market!**

You earn great related experiences and knowledge

- **Useful knowledge to improve the quality of our lives**

You will learn about your heart, brain and etc….

- **Full if Fun**

You will enjoy this more practical and less computational course

- **Pre-requisite**

This is the first course in medical devices and it is pre-requisite for advanced medical courses.

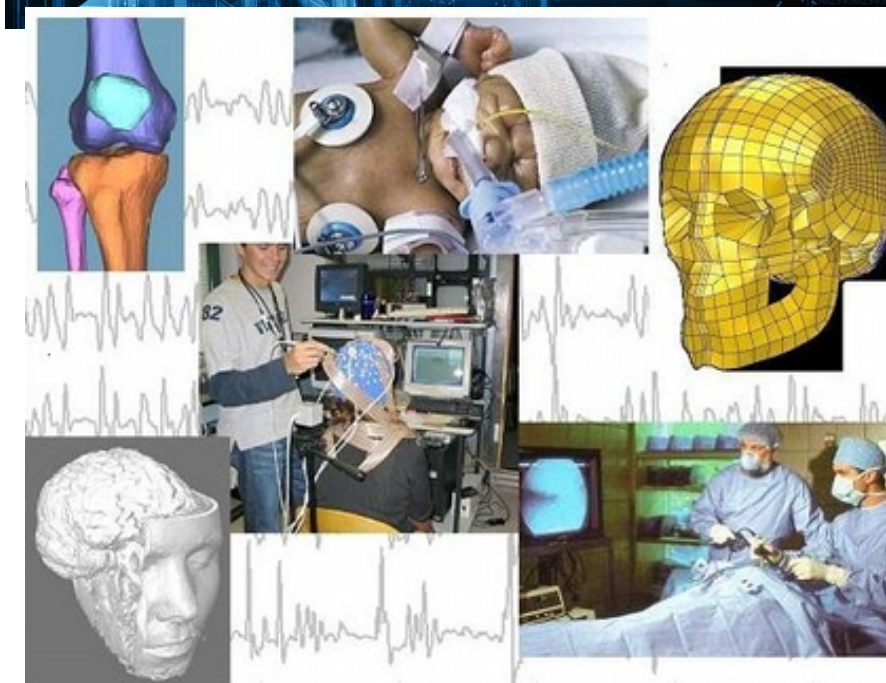

Why EECS4641?

You leartn avrious medical devices!

Why EECS4641?

Pre-Requisite

- **Medical Imaging systems**
- **Biomedical Signal and Systems**
- **Advanced Biochips**

Examples of Medical Devices

Introduction to Medical Devices

EEC: Heart diagnostics

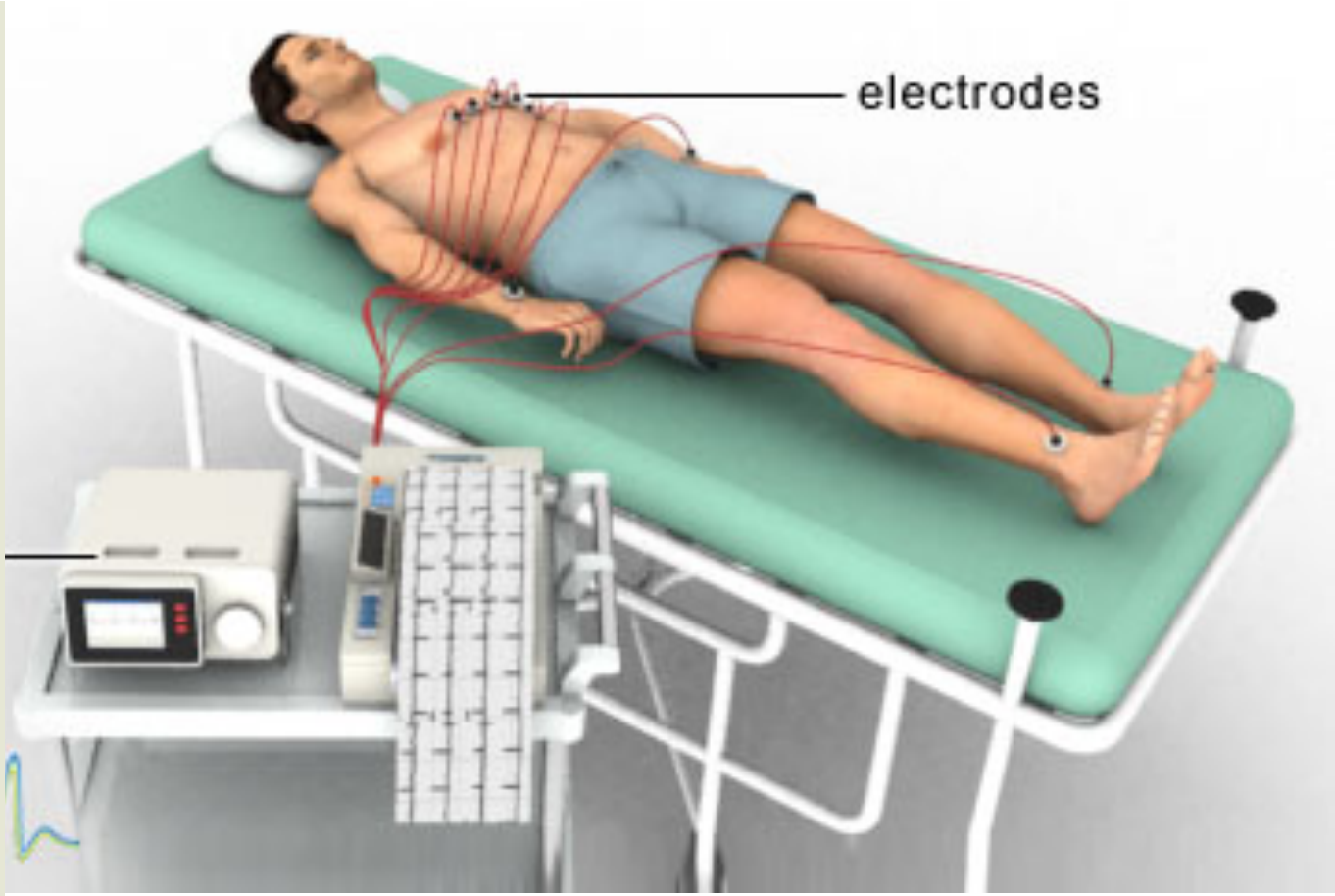

EECS4641: Introduction to Medical Devices

EMG: Musle Diagnotics

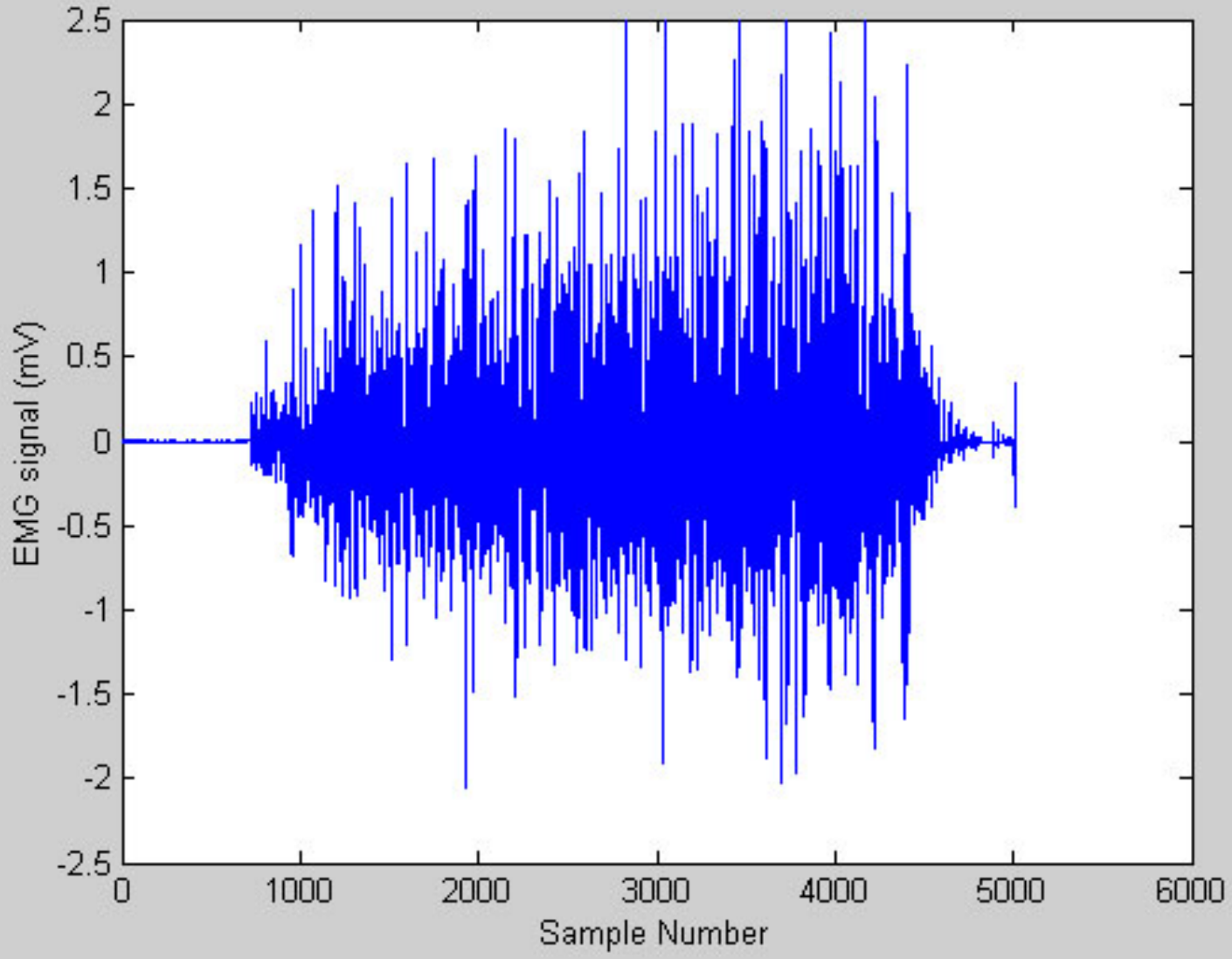

EECS4641: Introduction to Medical Devices

EEG: Brian Diagnostics

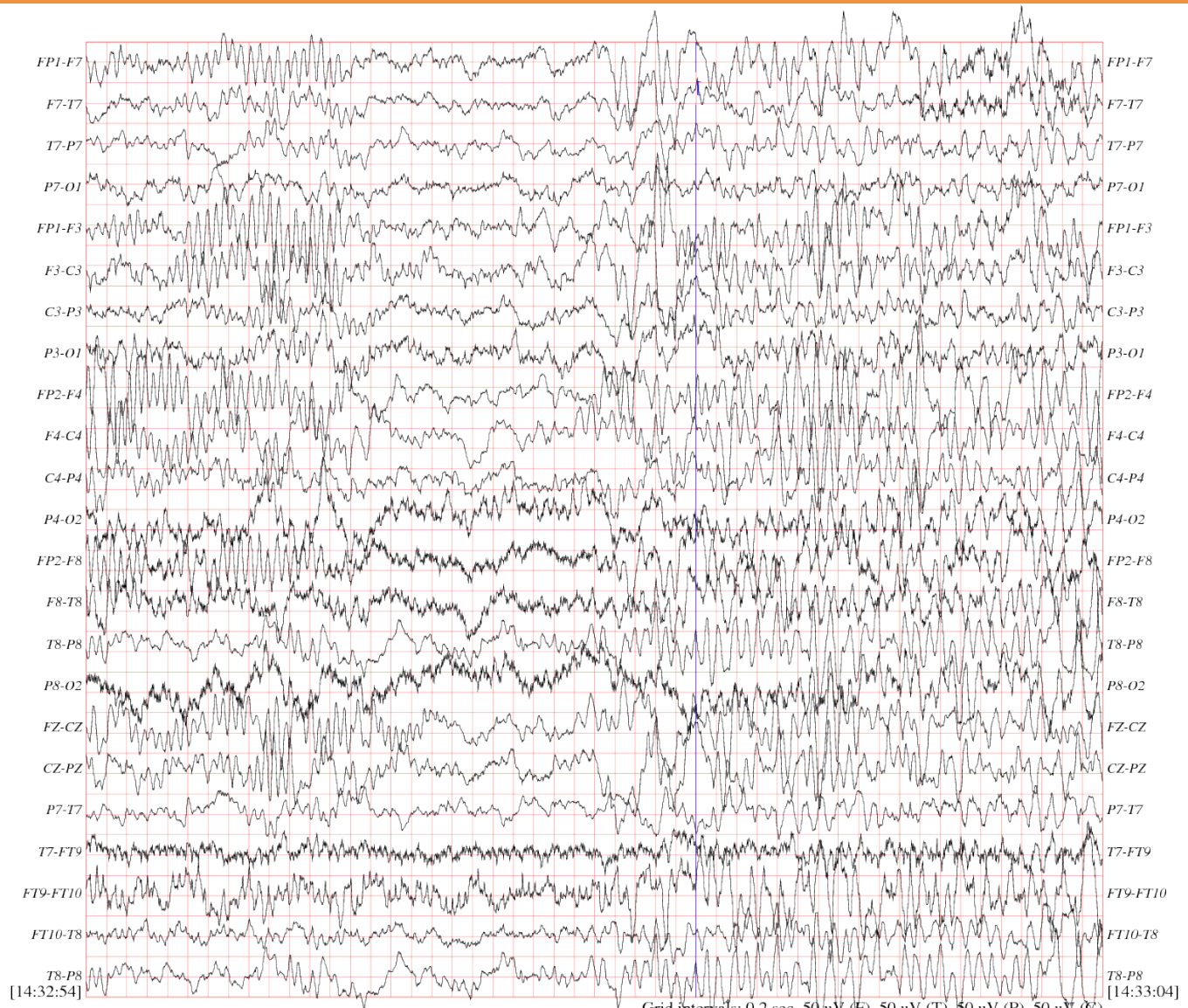

EECS4641: Introduction to Medical Devices

EOG: Eye Muscles Diagnostics

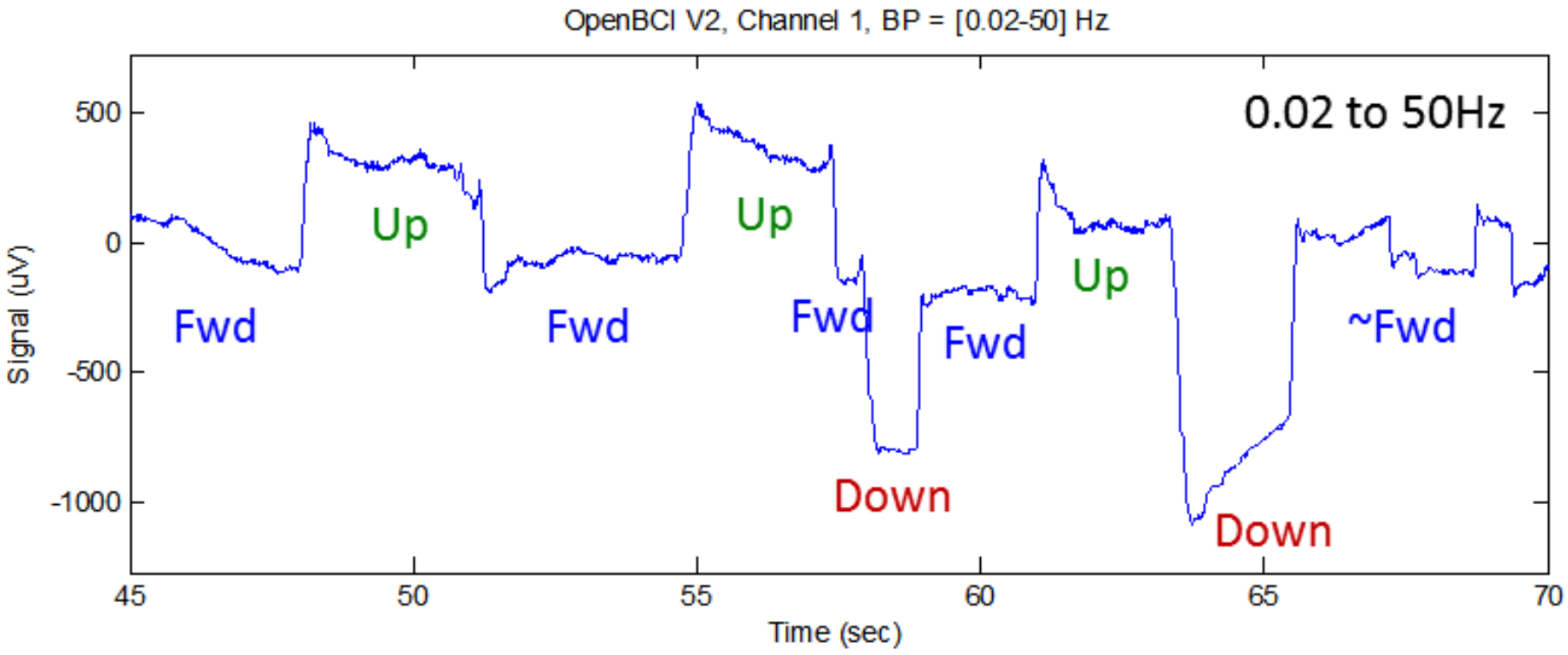

EECS4641: Introduction to Medical Devices

Spirometery: Lung Diagnostics

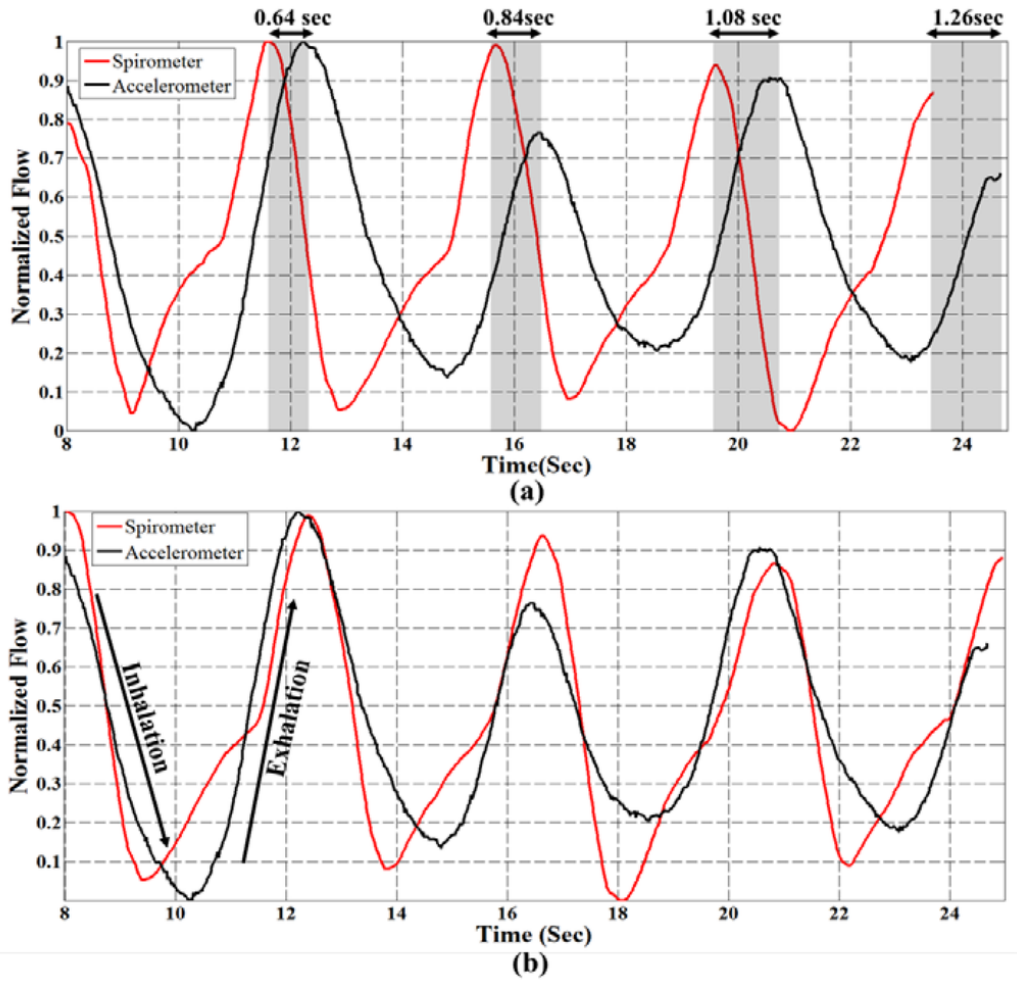

EECS4641: Introduction to Medical Devices

Magnetic Resonance Imaging System (MRI)

EECS4641: Introduction to Medical Devices

Ultrasonic Imaging System

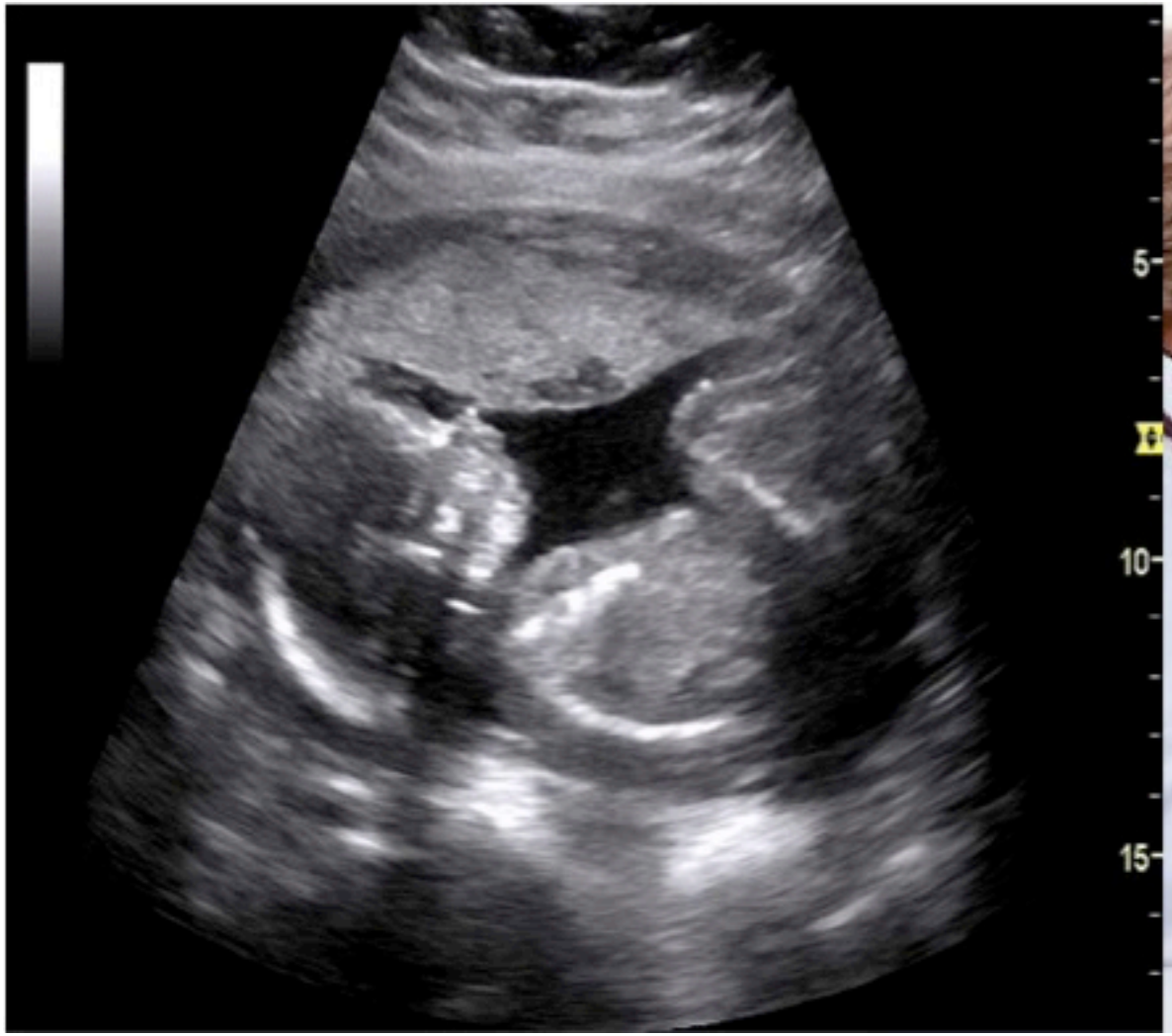

EECS4641: Introduction to Medical Devices

X-Ray Imaging Technqiue

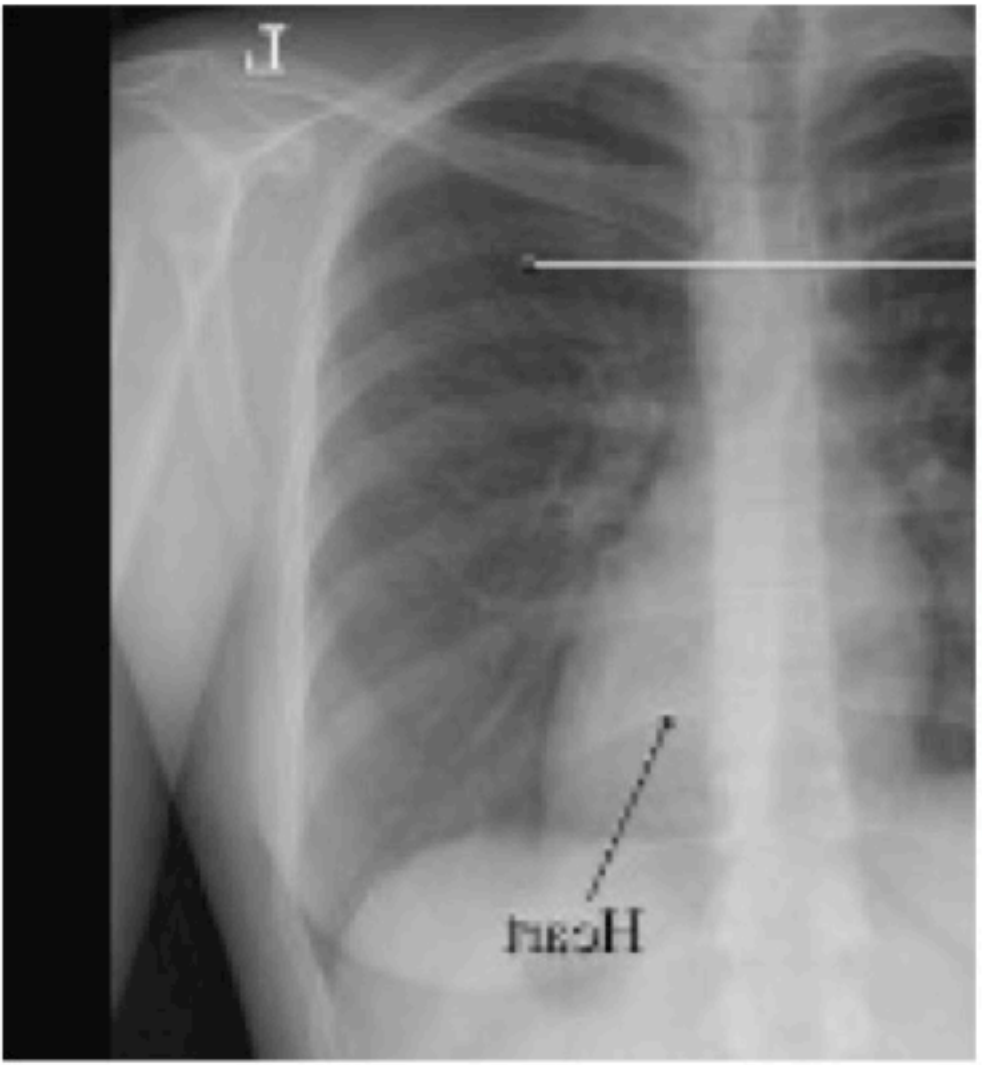

Low Complexity Medical Devices

Home Diagnostics Medical Devices

Medical Devices Categories

- **Disease Diagnostics**

  Detection of Bio-Marker or Symptoms
  For example, presence of Timor in the brain seen in MRI, crack seen in X-ray,..

- **Control, treatment**

  For example, dialysis, defibrillator

- **Medical Assistive devices**

  for example, Electro-cutter used in surgery, Prosthetic devices, etc.

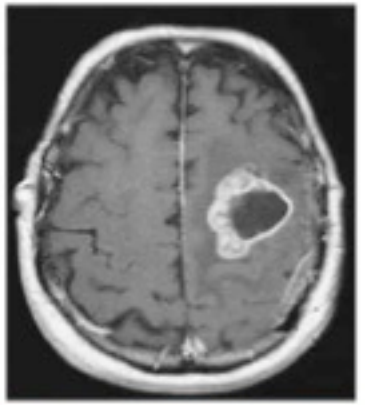

Medical Devices at Medical Dr. Office

- Balance
- Blood Pressure
- Stethoscope
- Medical stick
- Otoscope

Medical Devices at Home

- Blood Glucose Monitoring
- Blood Pressure Monitoring
- Oxygen for pulmonary and heart diseases
- Temperature measurement

Medical Devices at Analytical Laboratory

- Hematology Analyzer
- Genome Decoder
- Microscope
- …

Medical Devices at Hospital (Surgery)

- Bypass Heart Surgery
- Robotic Surgery
- Electro-Cutter
- ultrasonic micro-vibratory

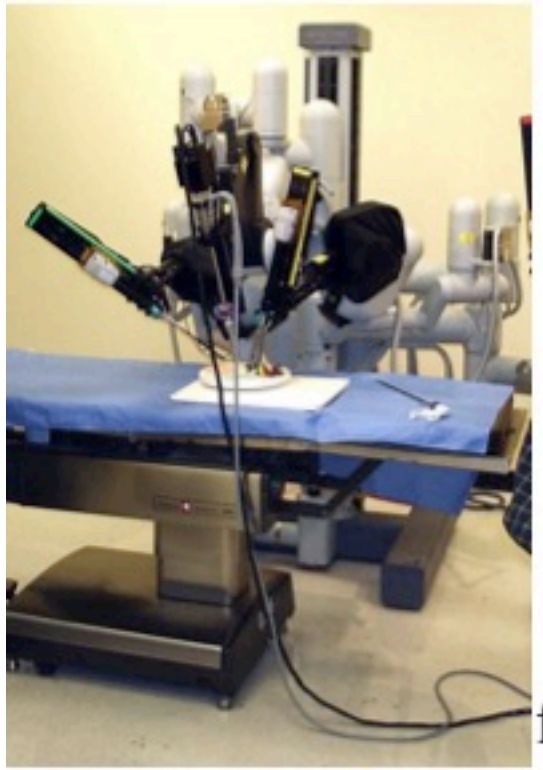

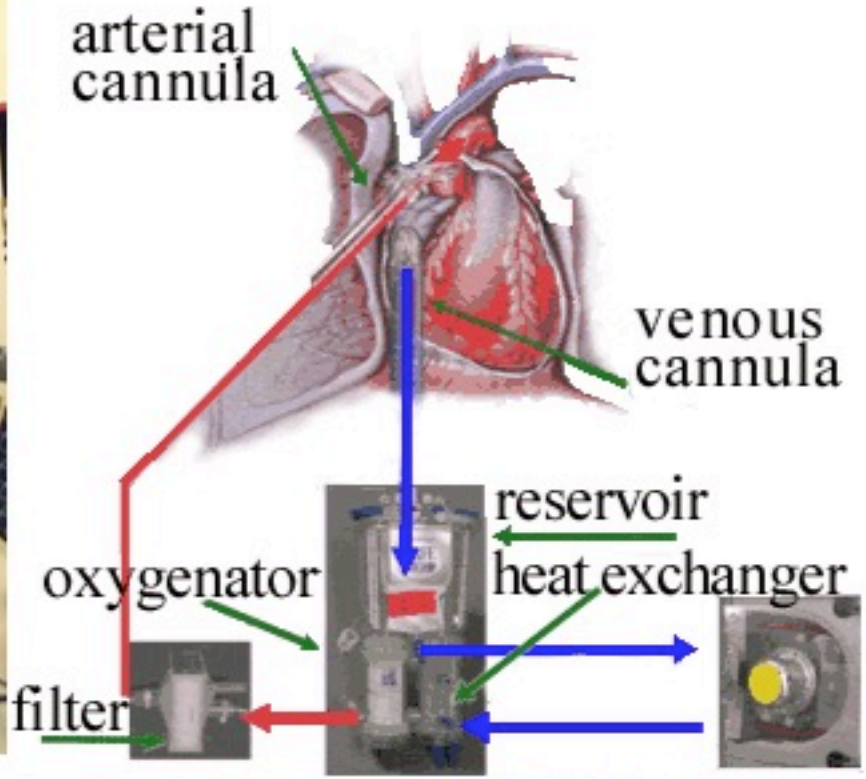

Medical Devices at Hospital (ICU)

Intensive care unit

- Intubation
- Defibrillation
- External Pacemaker
- Dialysis
- etc

Medical Devices at Dental clinics

- Dental Unit
- Delma Curing Light
- Endo Motor
- Portable X-ray

Medical Devices at Optometry Center

- Phoropter vision tester
- Ophthalmoscopy
- Eyeglasses

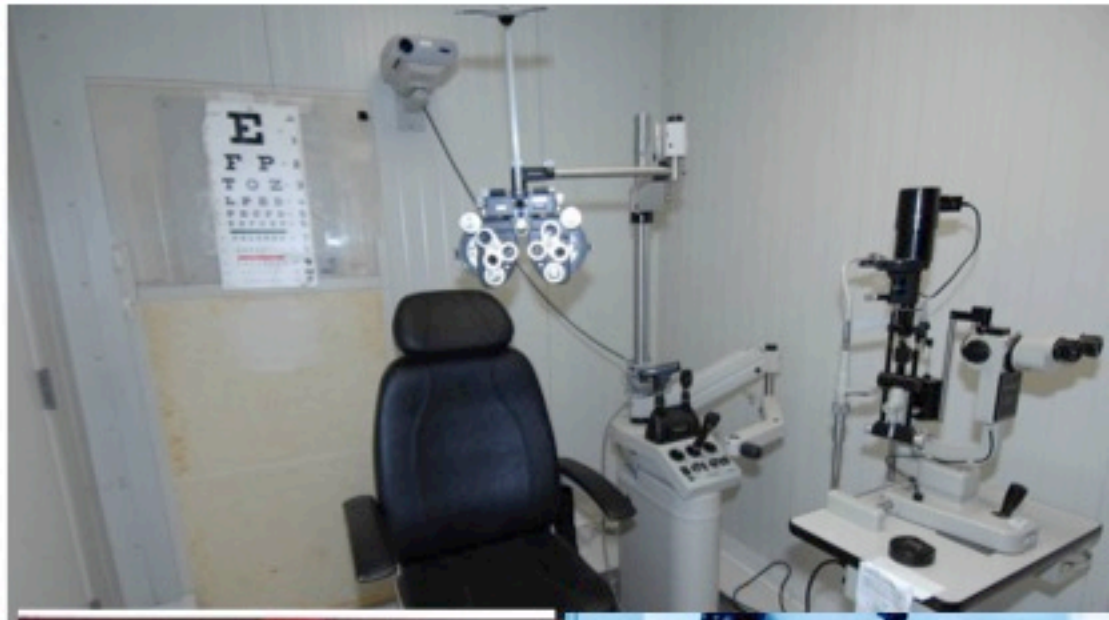

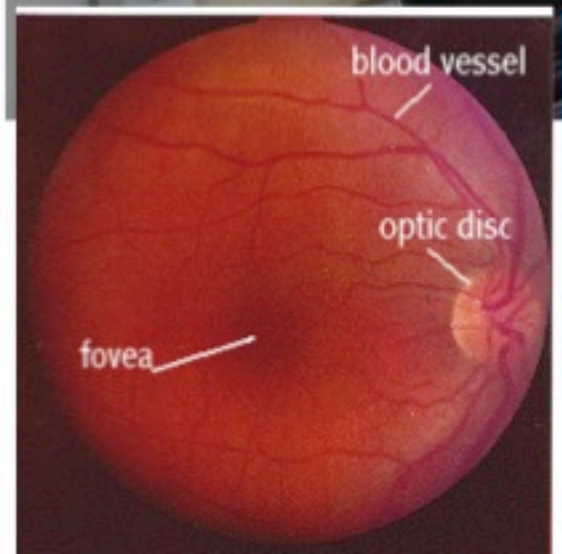

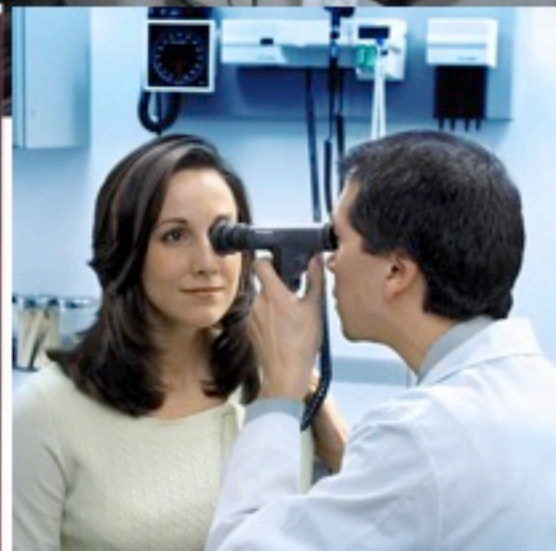

Medical Devices(Prosthesis)

- Heart
- Foot, Hand,…
- Eye
- Ear
- Etc?

Medical Devices (Implants)

- Pacemaker
- Brian Stimulator

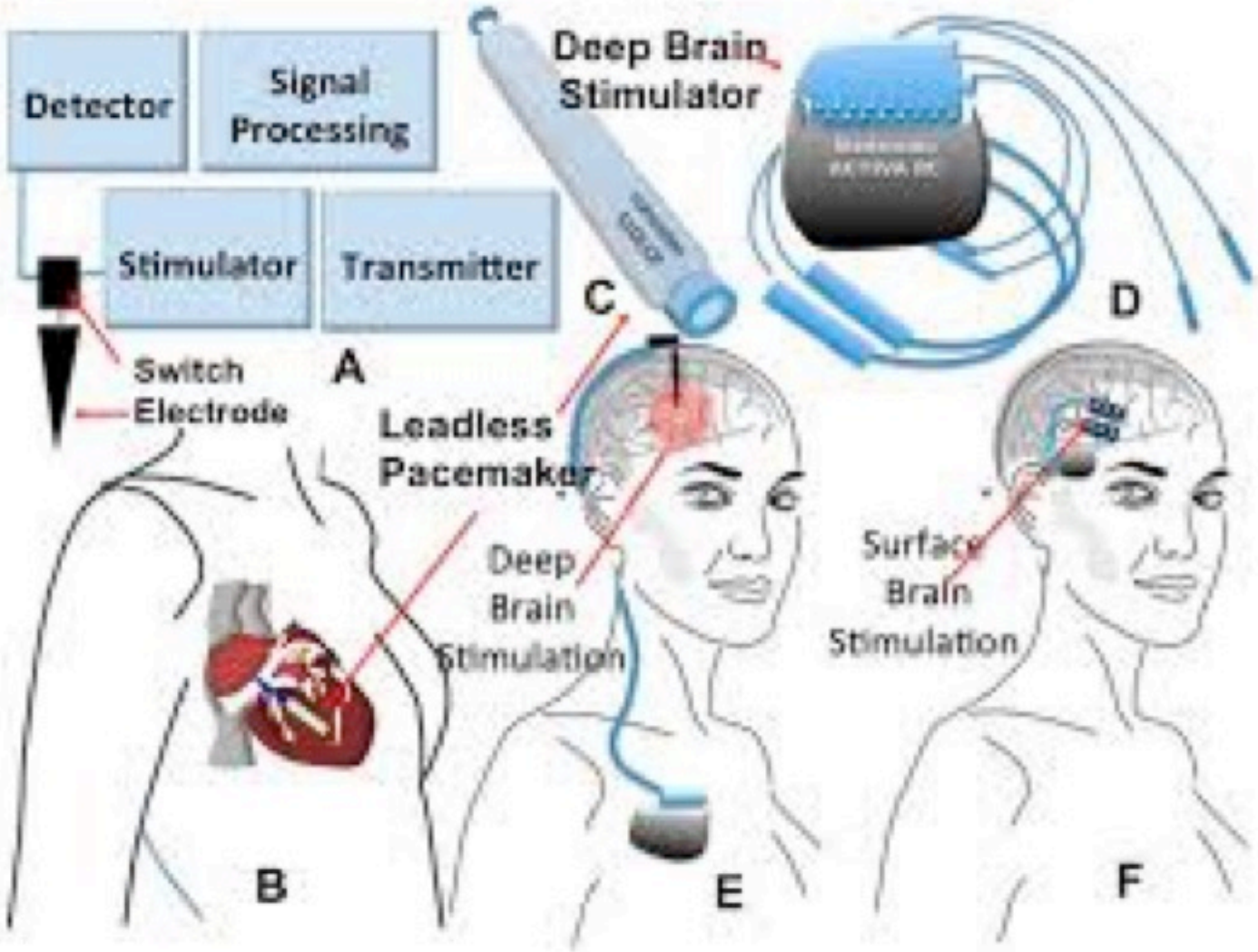

Medical Devices
(Wearable PoC devices)

- Glucose control
- Contact lens
- Patch sensors
- etc.

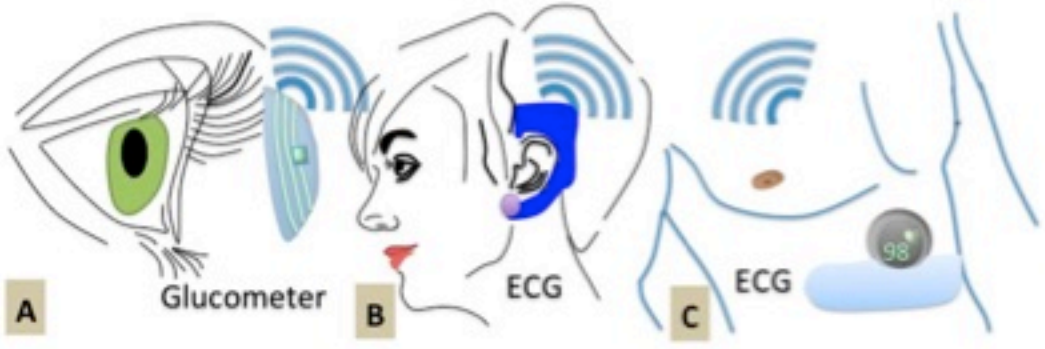

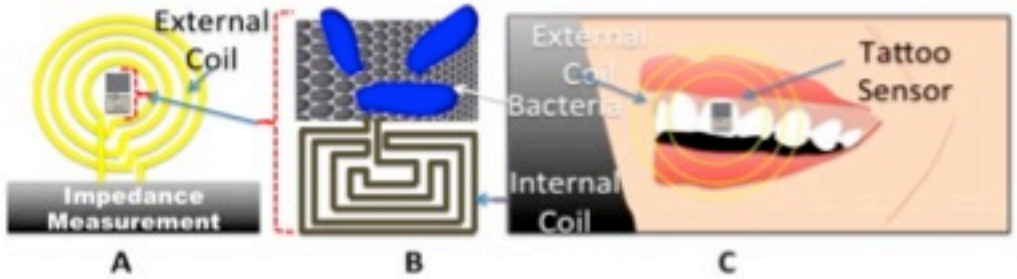

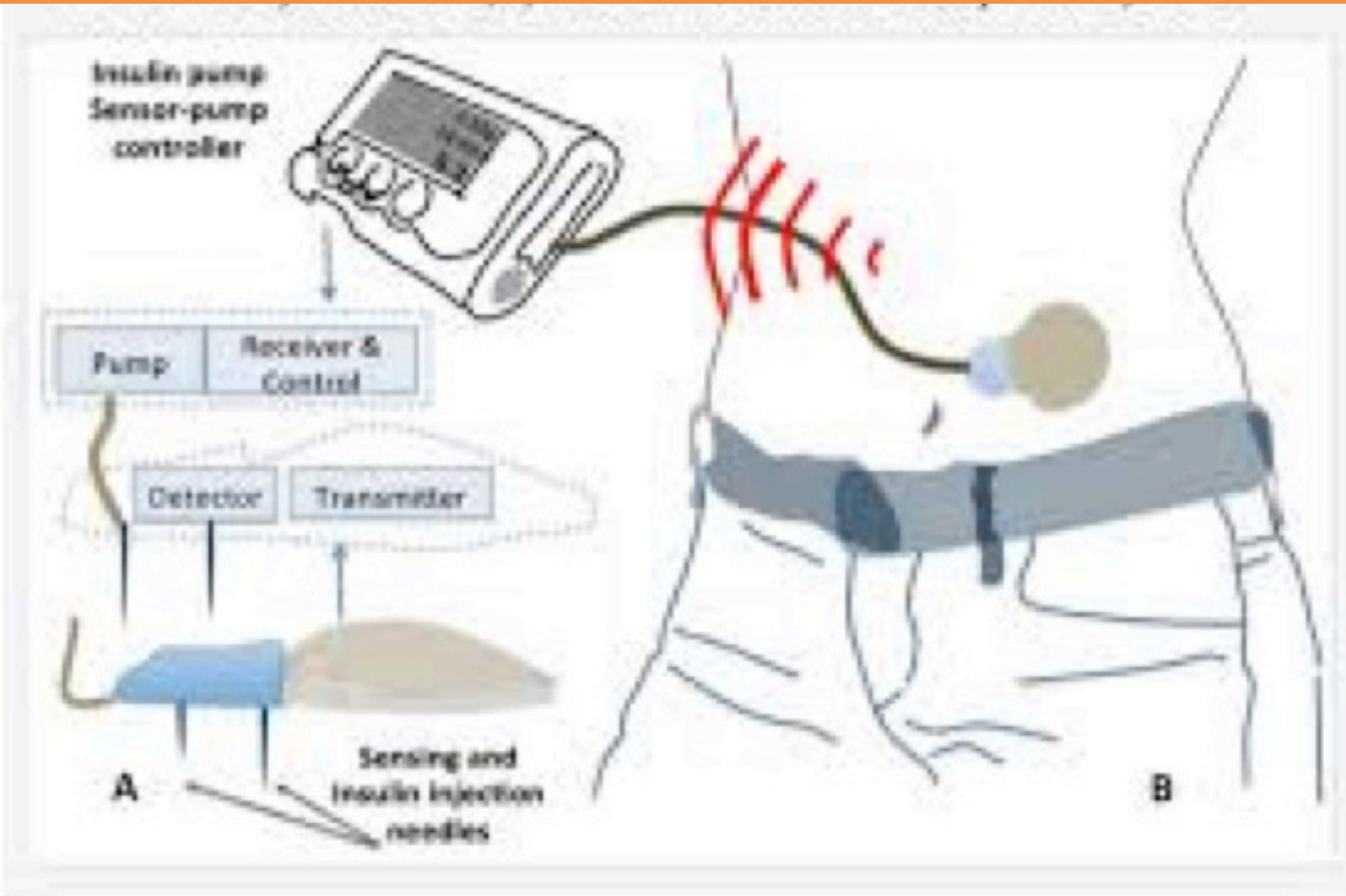

Medical Devices (Other Diagnostics…)

- Exercise test
- Audiometry

Fundamental of Medical Devices

- Clinical/Medical Question
- Design idea
- Implementation
- Verification
- Clinical Trail
- Approval
- Commercialization
- Marketing

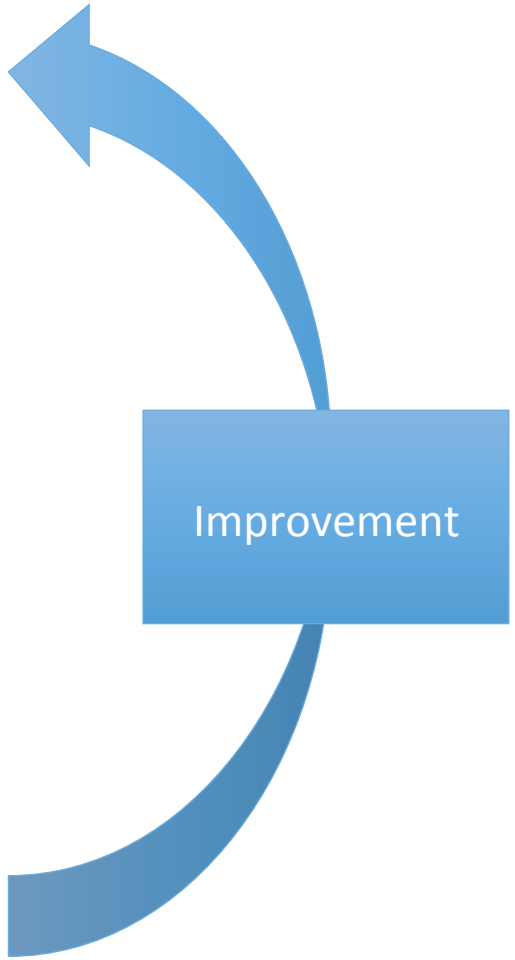

EECS4641: Introduction to Medical Devices

Lecture 2: Overview of OP-AMPS

Dept. of Electrical Engineering and Computer Science

York University, Jan. 7th 2016

Operational Amplifier

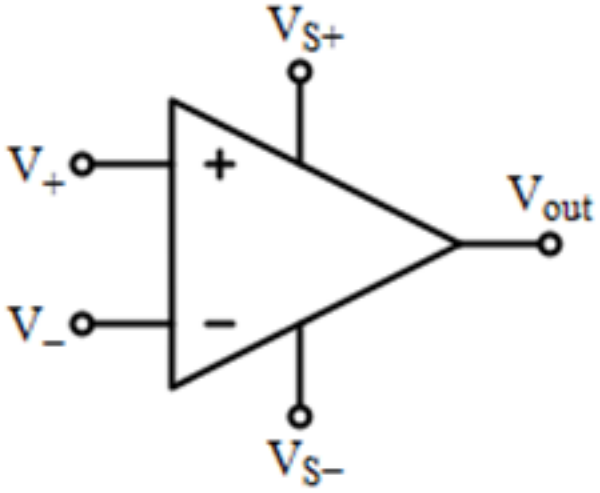

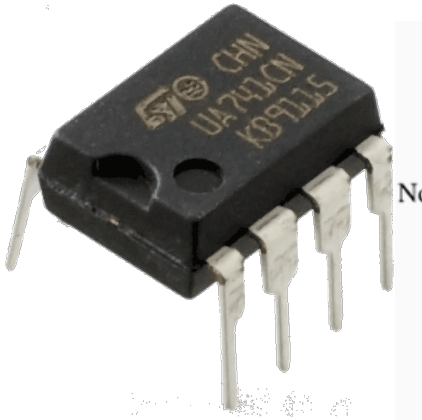

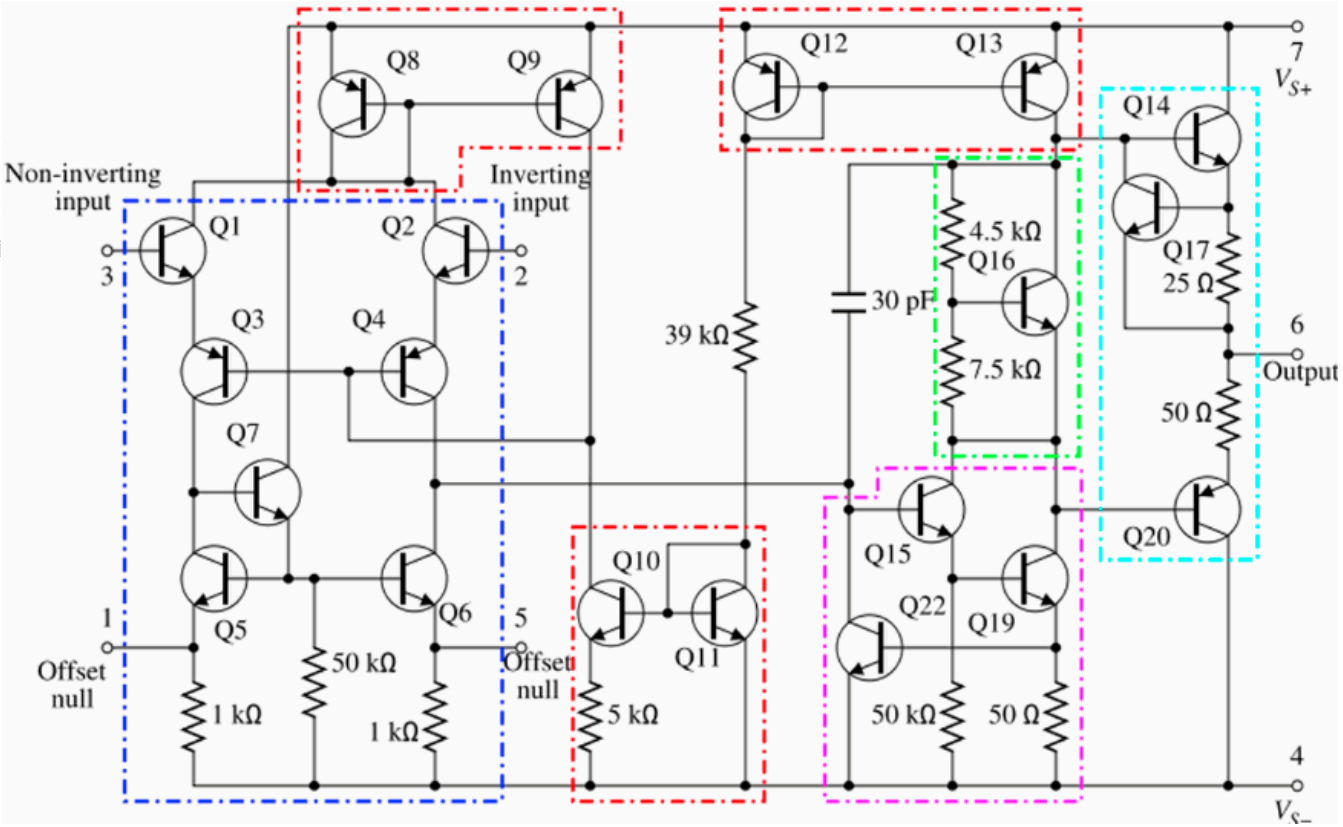

- V_+ : non-inverting input
- V_- : inverting input
- V_{out} : output
- V_{S+} : positive power supply
- V_{S-} : negative power supply

Ideal Operational Amplifaier

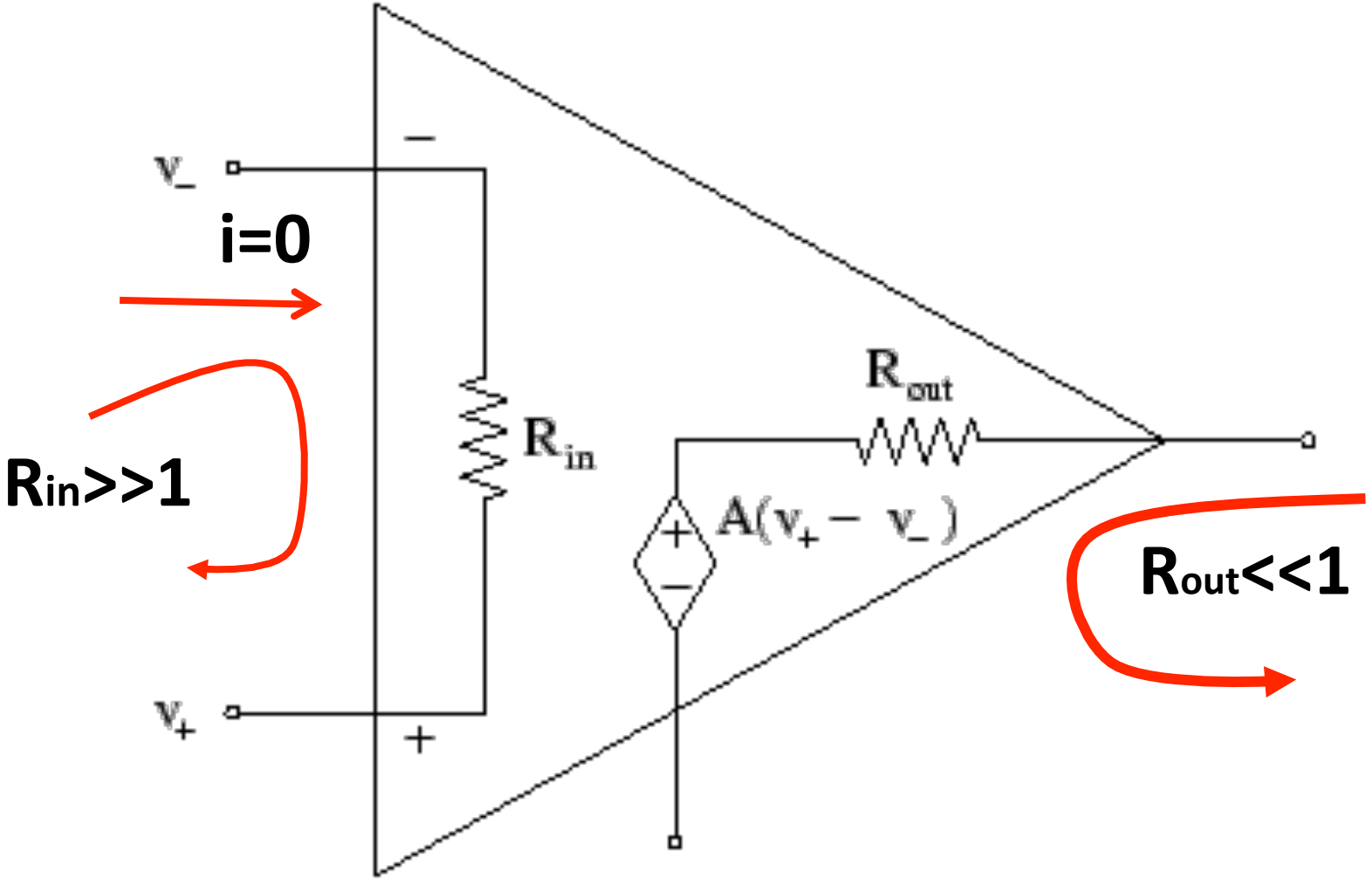

V-=V+

i=0

Rin→∞

Rout→0

A→∞

Operational Amplifier: Open Loop

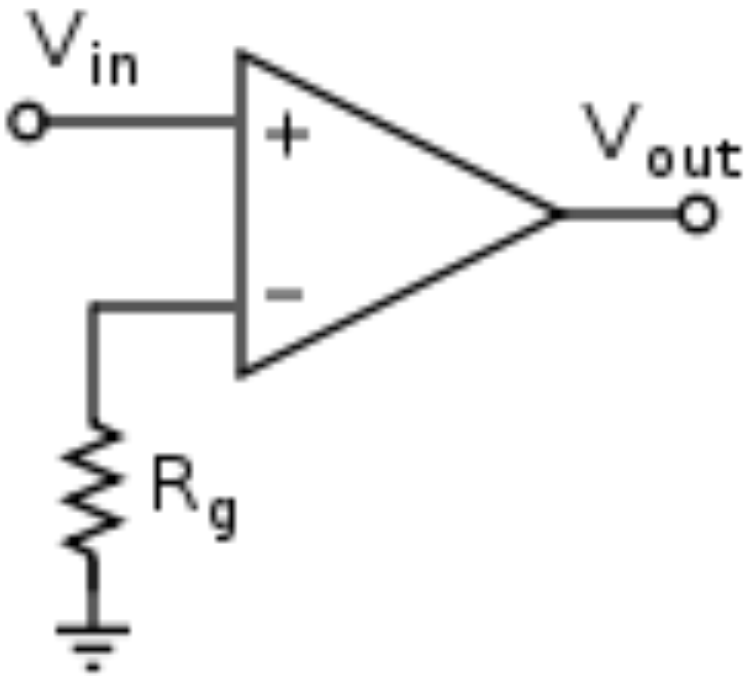

$$V_{\text{out}} = A_{\text{OL}}\left(V_{+} - V_{-}\right)$$

Operational Amplifier: Closed Loop

Non-inverting

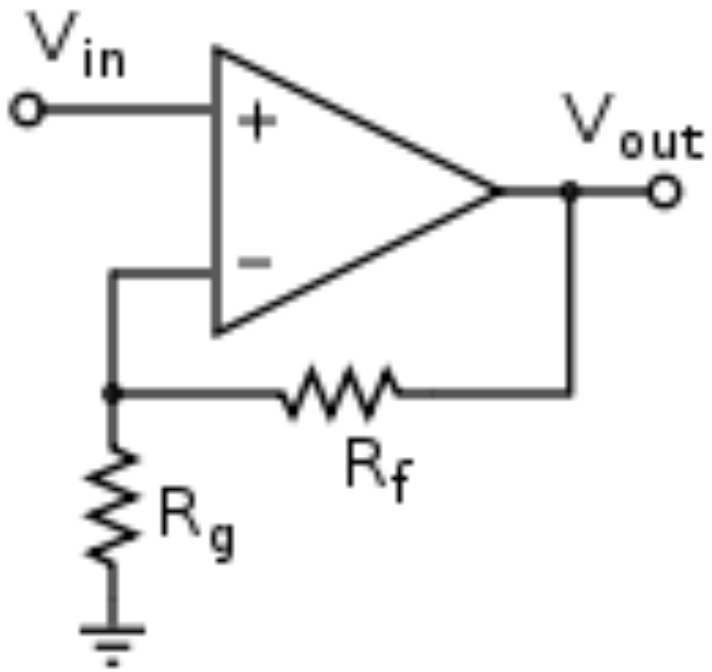

$$A_{CL} = \frac{V_{out}}{V_{in}} = 1 + \frac{R_f}{R_g}$$

Operational Amplifier: Closed Loop

Inverting

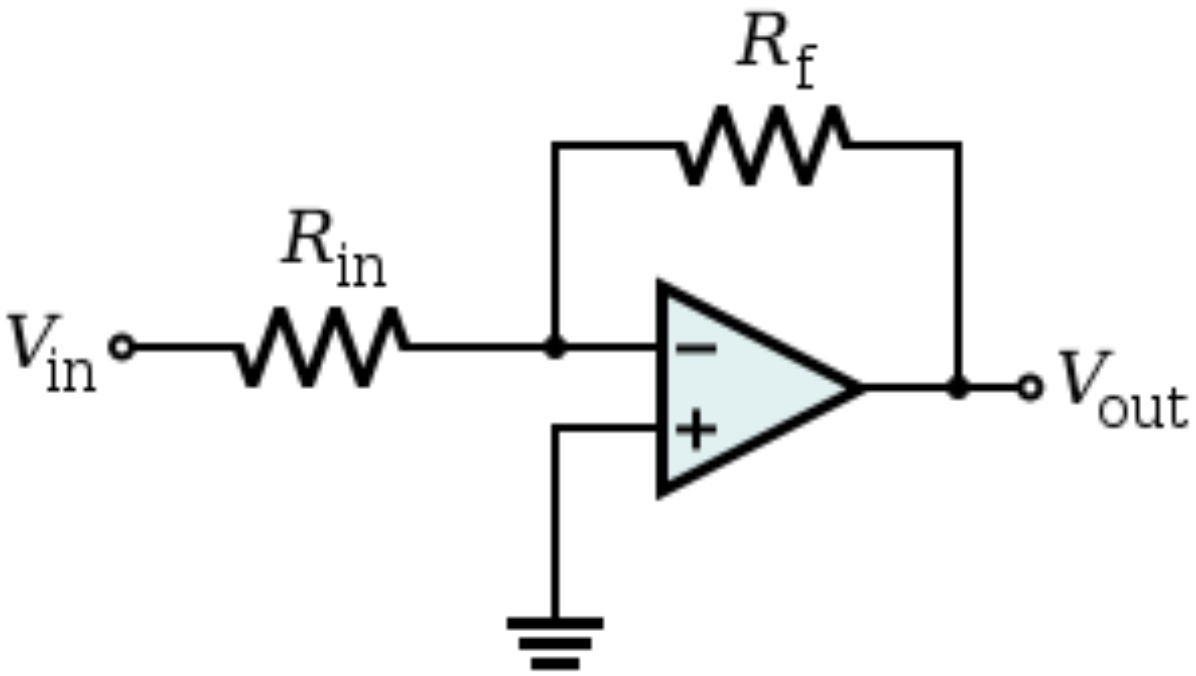

$$V_{out} \approx -V_{in} \frac{R_f}{R_{in}}$$

Operational Amplifier: Closed Loop

Inverting

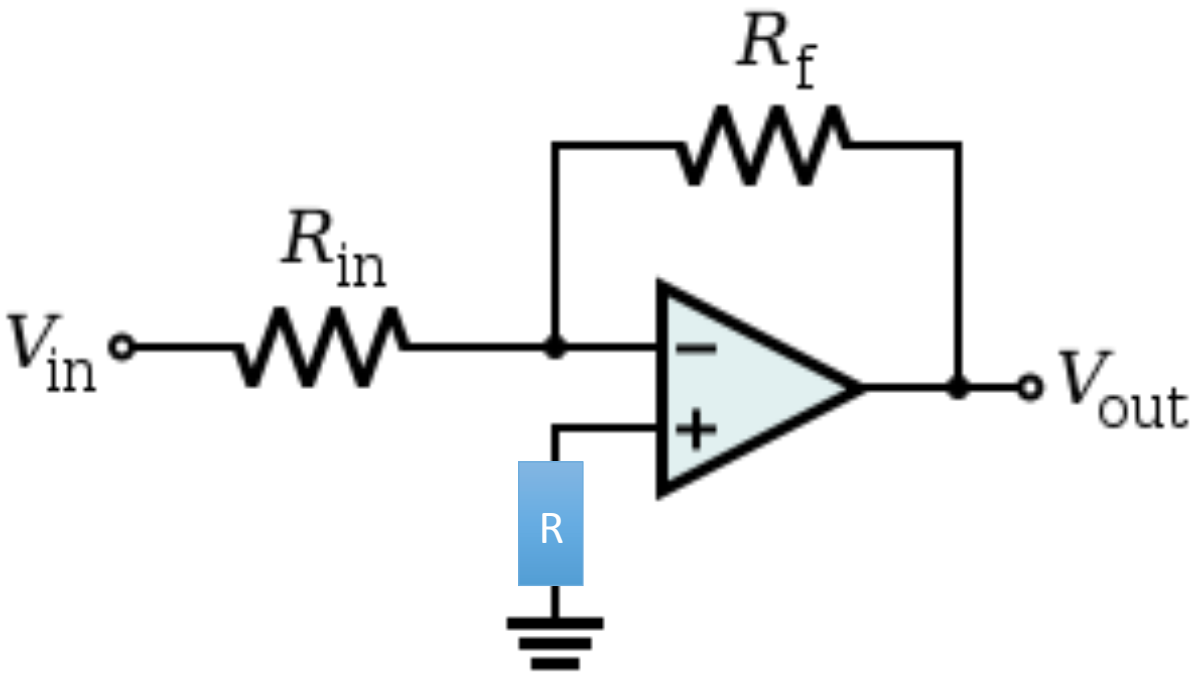

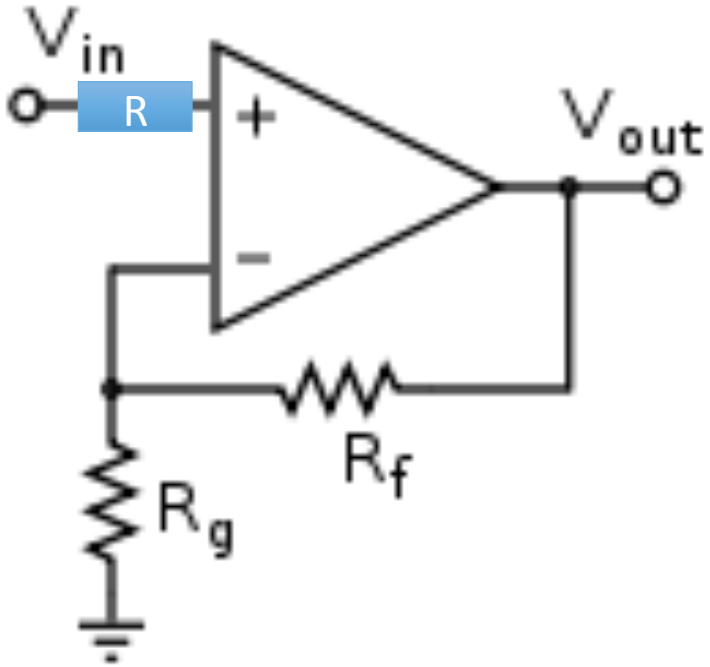

Operational Amplifier: Closed Loop

Example

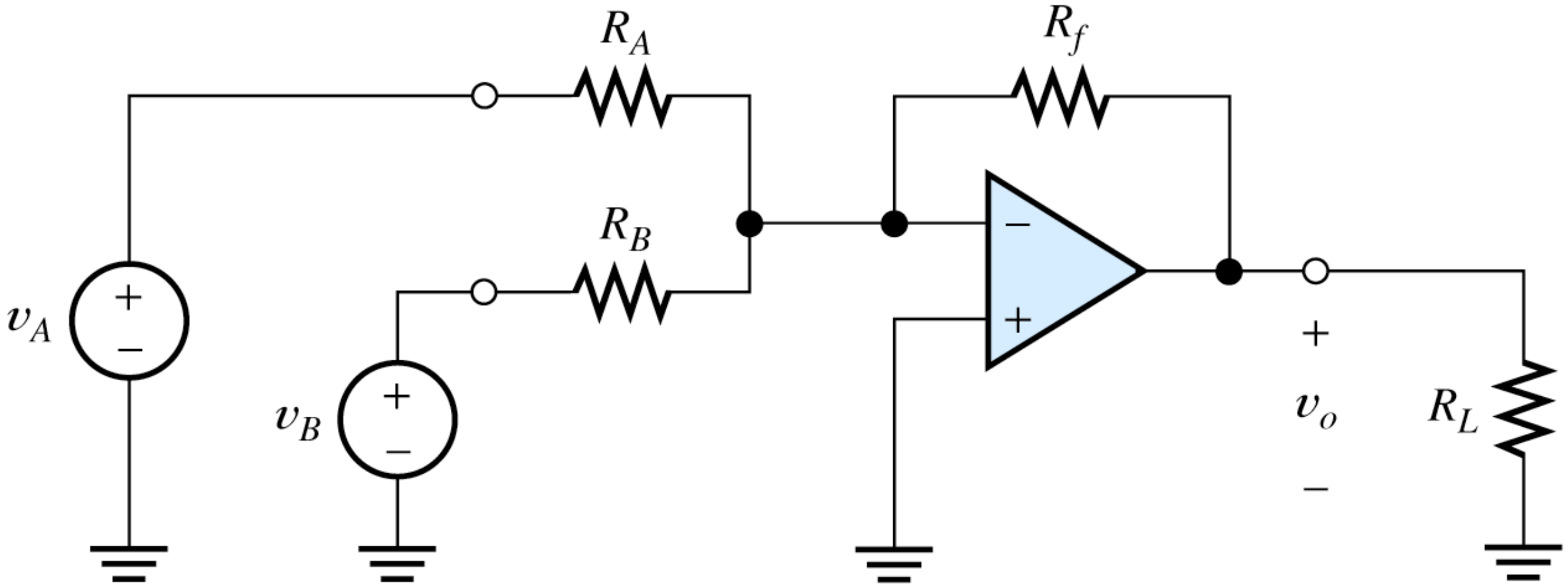

Operational Amplifier: Diffrential

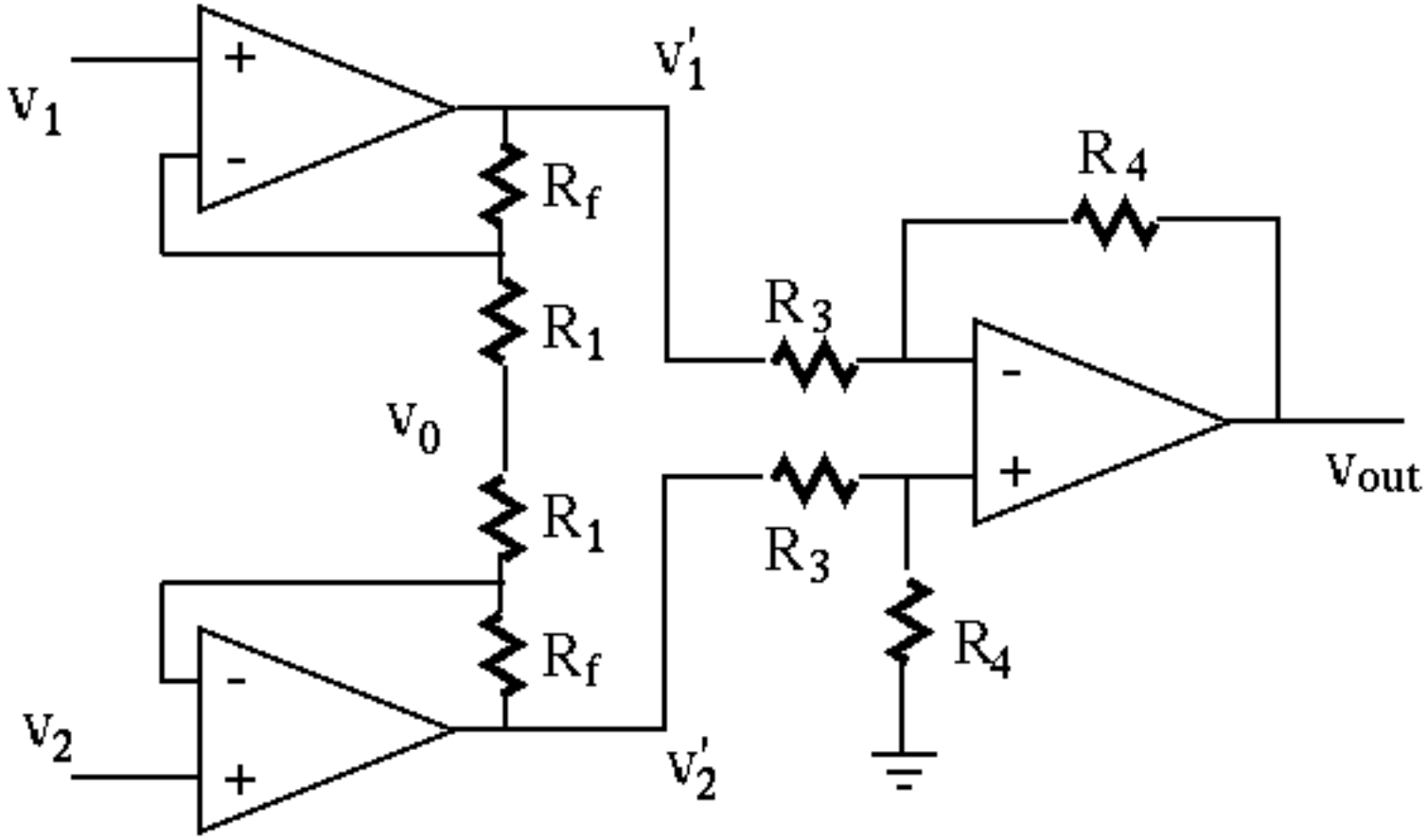

Operational Amplifier: Diffrential

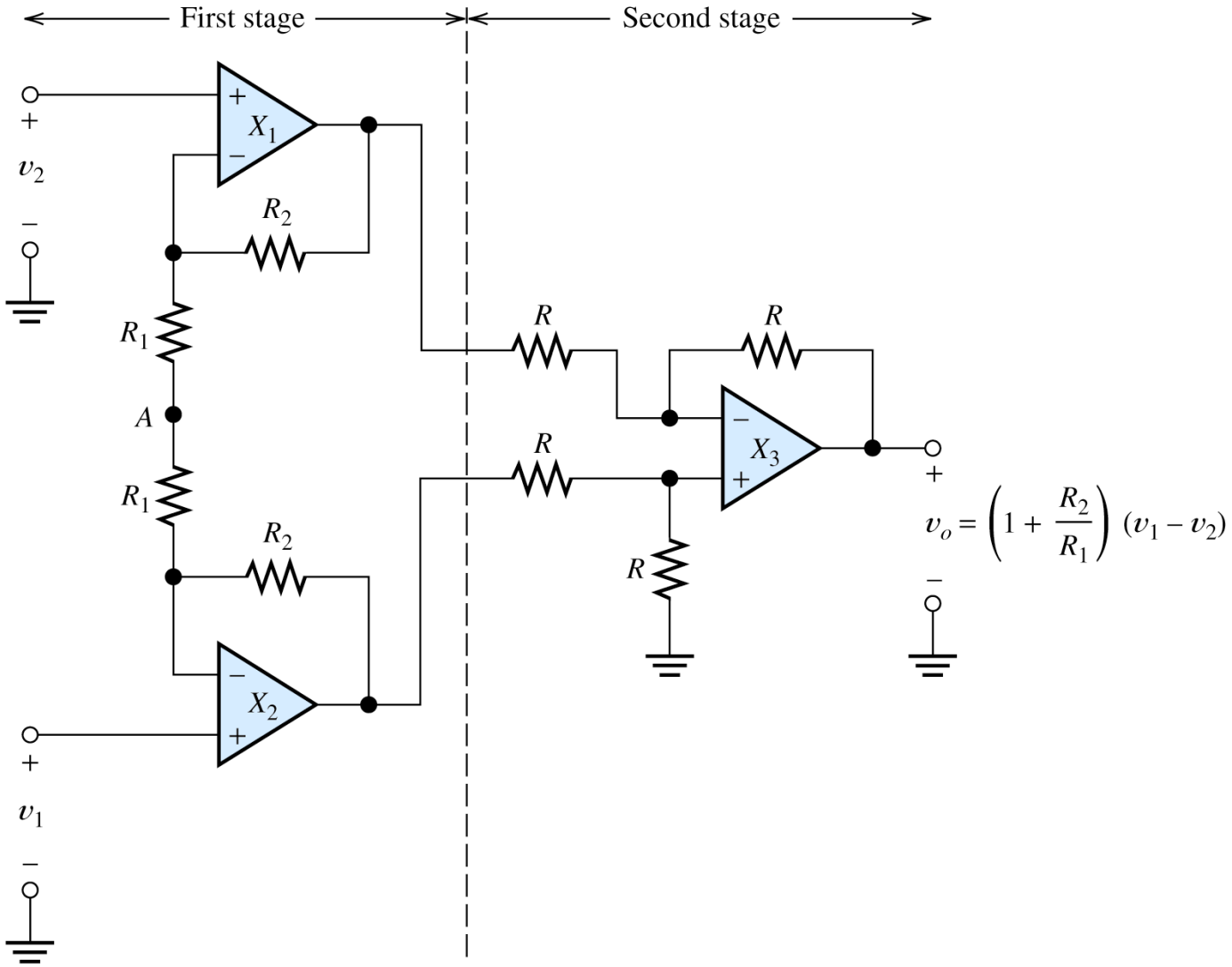

Operational Amplifier: Diffrential

Example: Calculate the output as a function of input

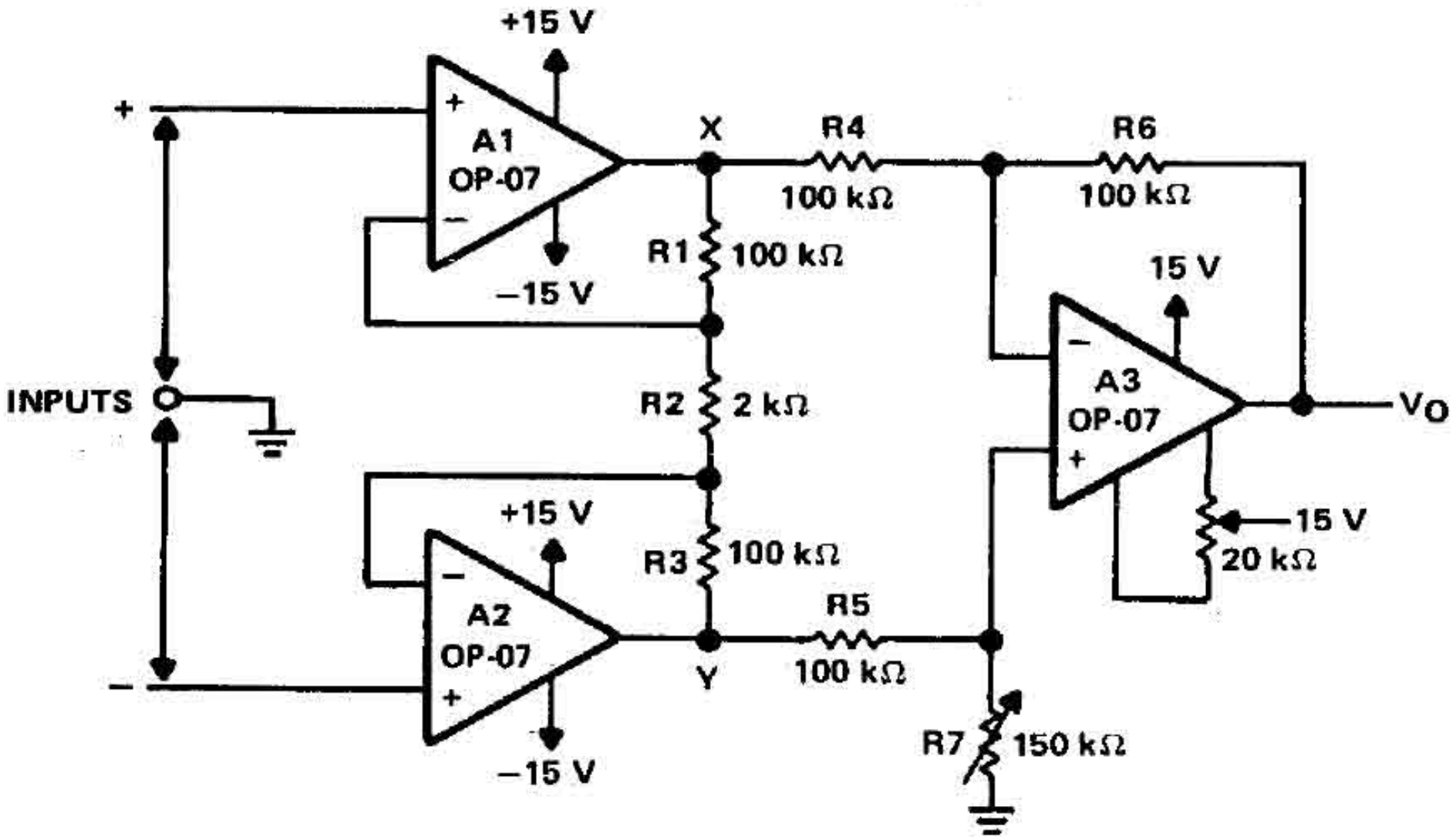

Operational Amplifier

Differential-Integrator

Differentiator Op-amp

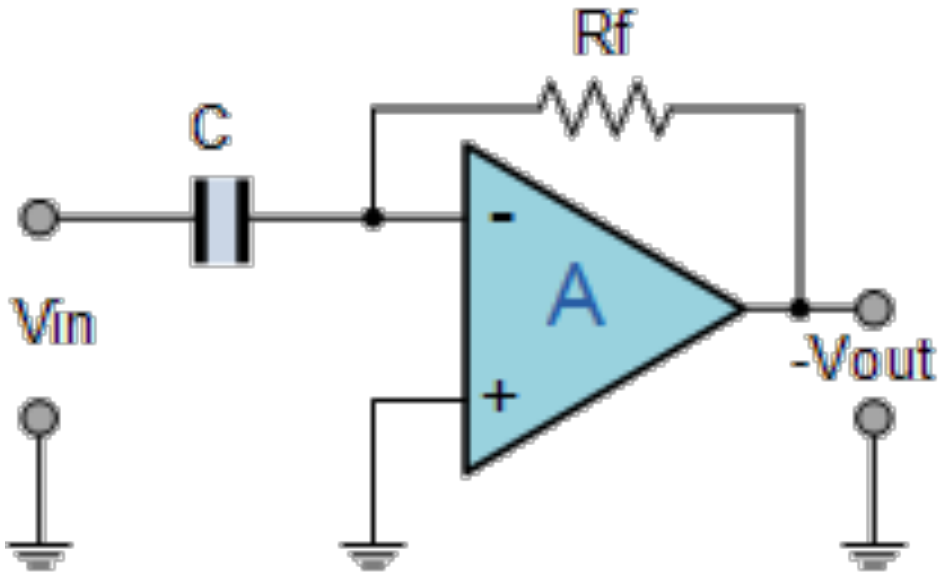

$$V_{out} = -R_f C \frac{dV_{in}}{dt}$$

Integrator Op-amp

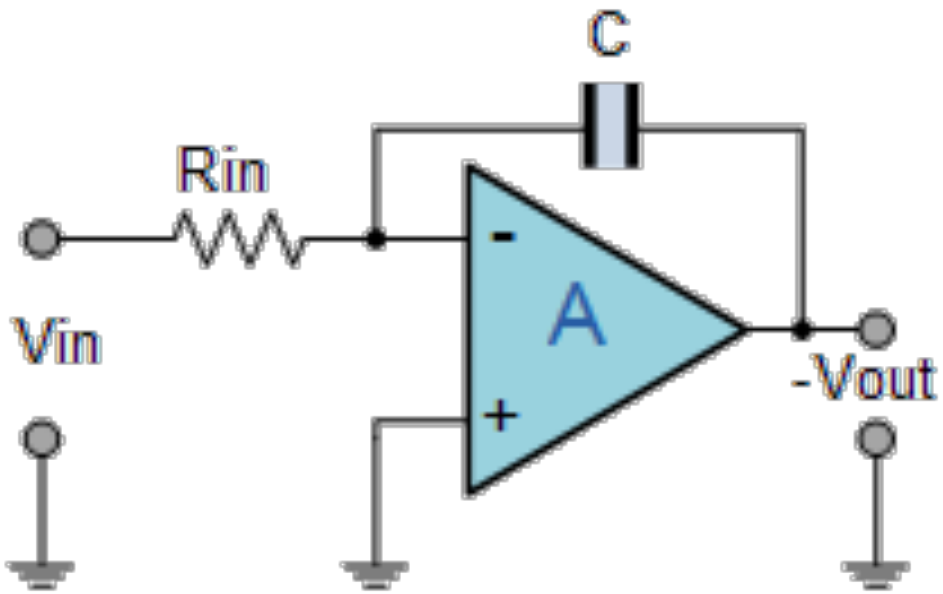

$$V_{out} = -\frac{1}{j\omega R_{in} C} V_{in}$$

Integrator and Amplifier

Example: Find output as diffrential equation relationship of input

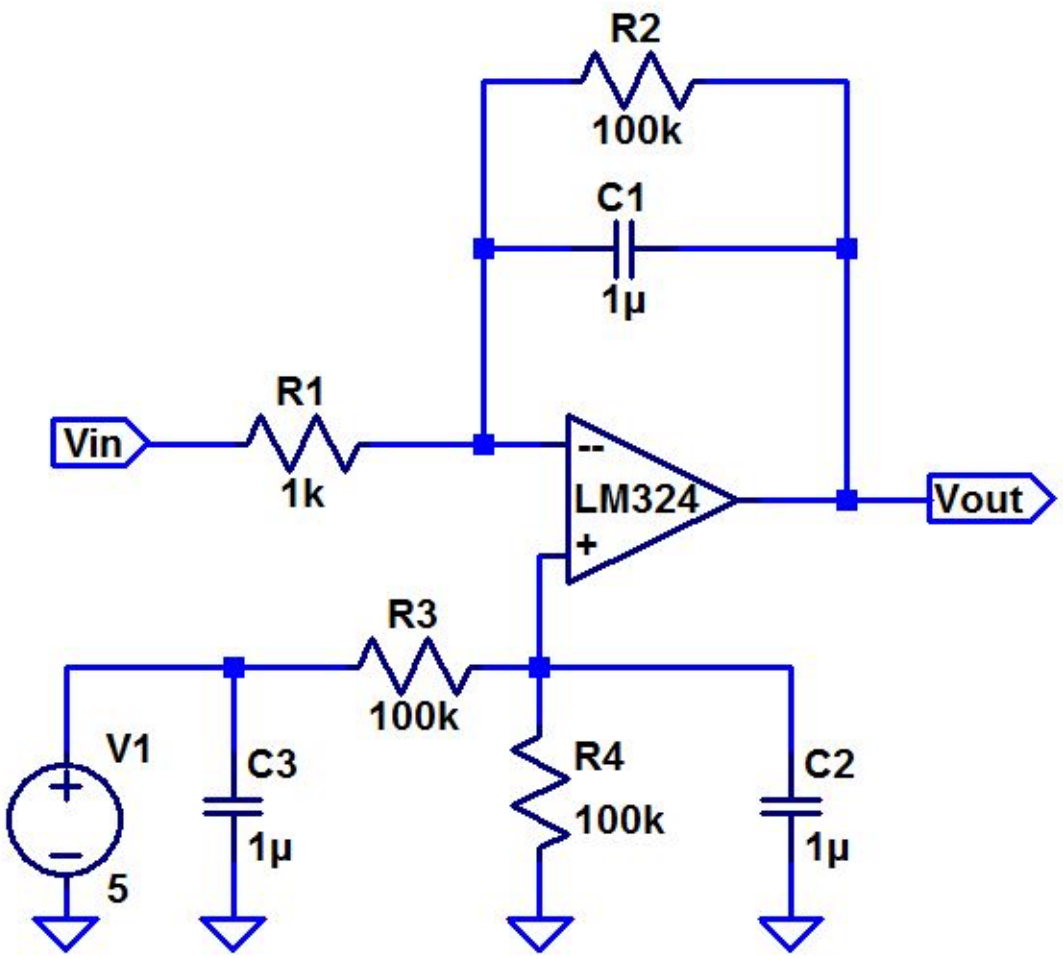

Will be Continued in Next Class

EECS4641: Introduction to Medical Devices

Lecture 2

Ebrahem Ghafar-Zadeh

Dept. of Electrical Engineering and Computer Science

York University, Jan. 11th 2016

Electro-genic cells (Brain)

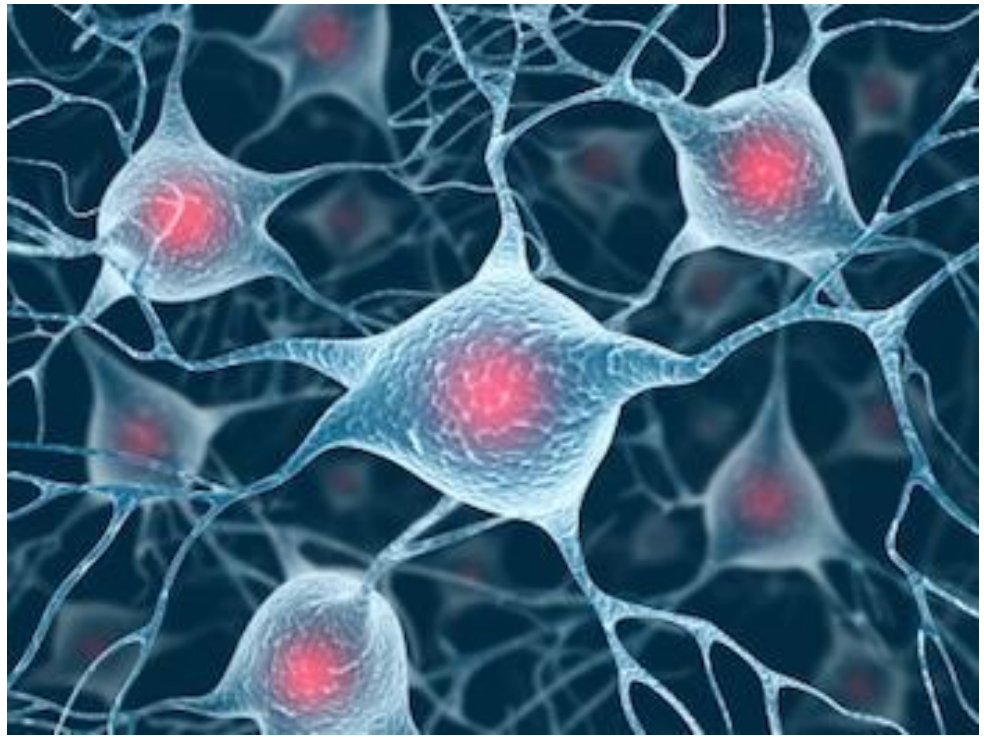

Electro-genic cells (Heart)

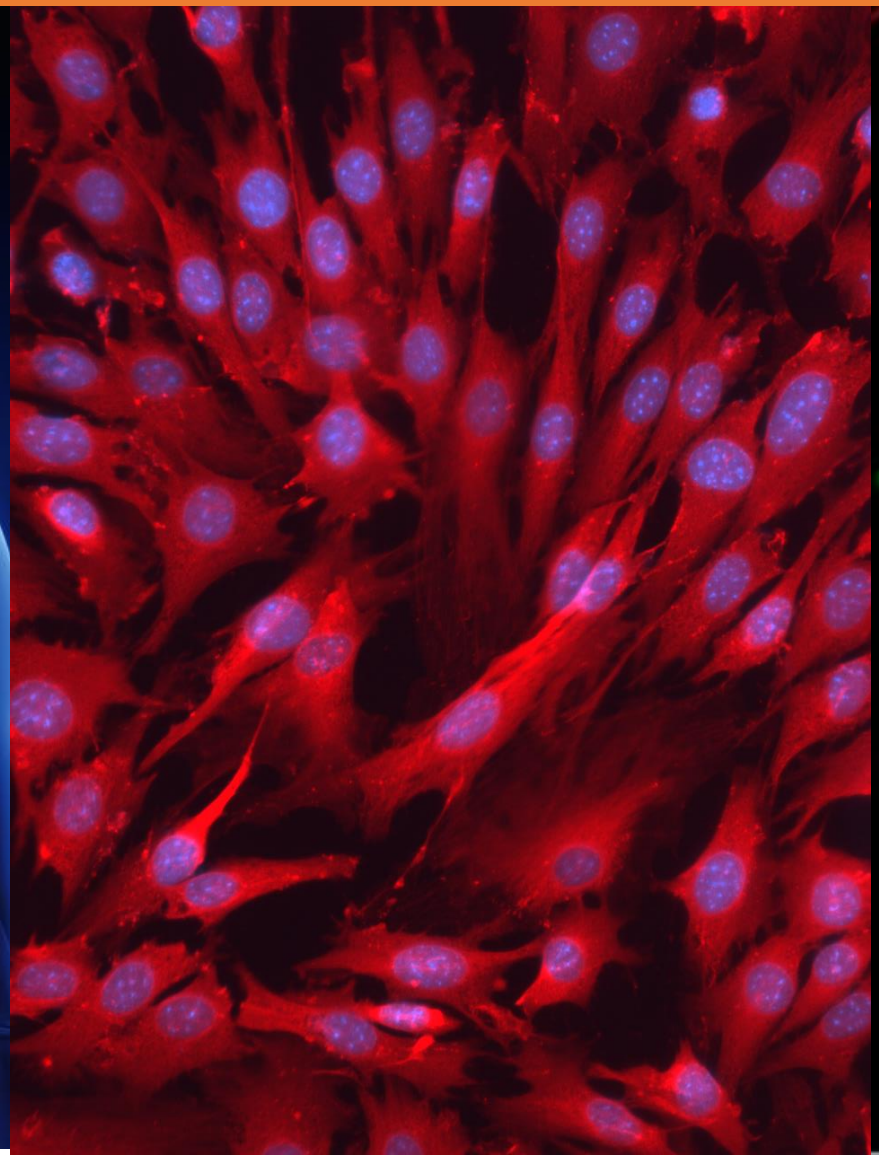

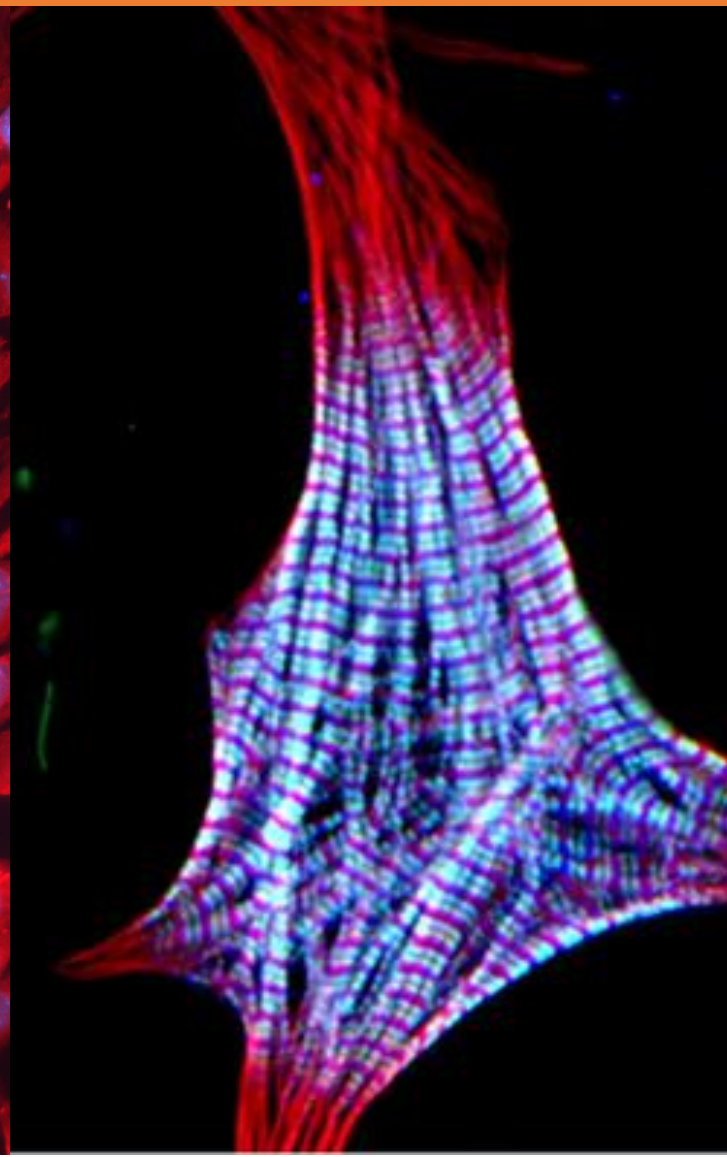

Electro-genic cells (Musle)

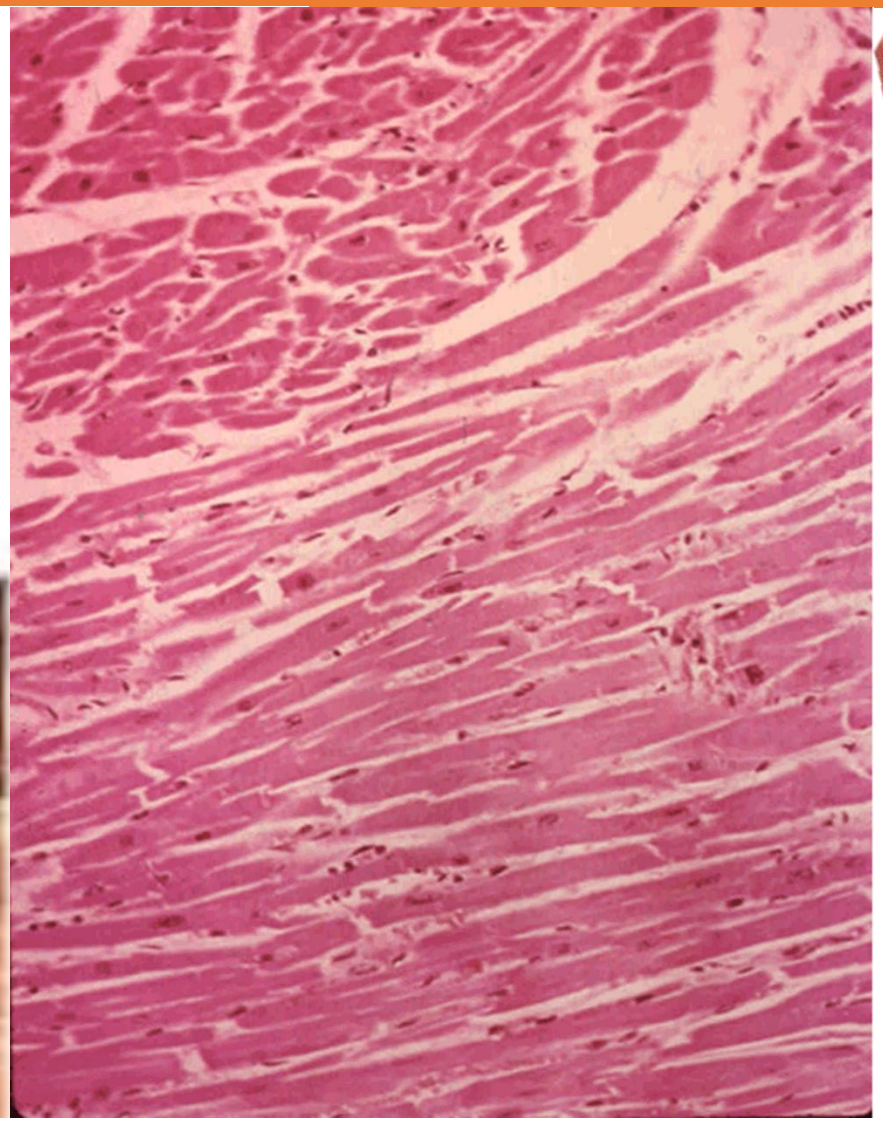

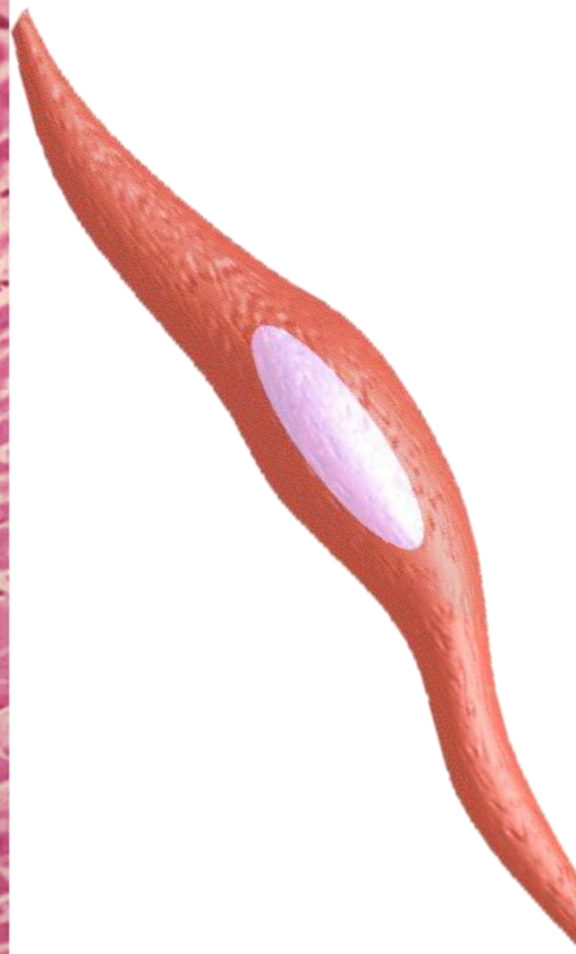

Action Potential

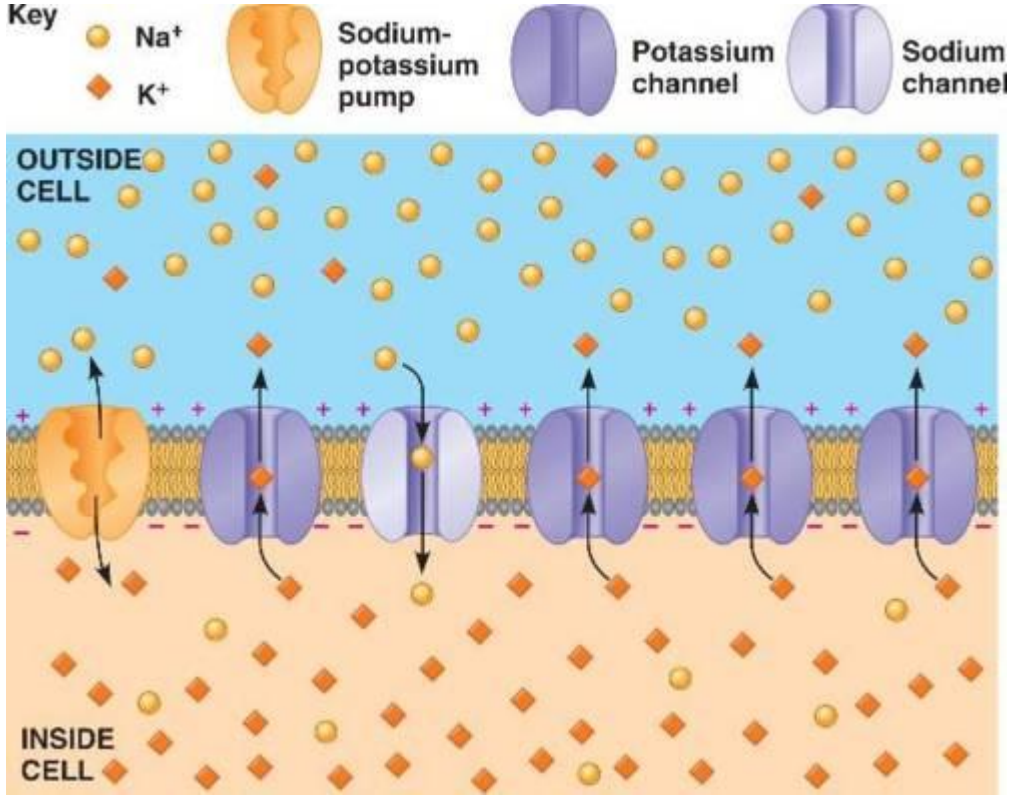

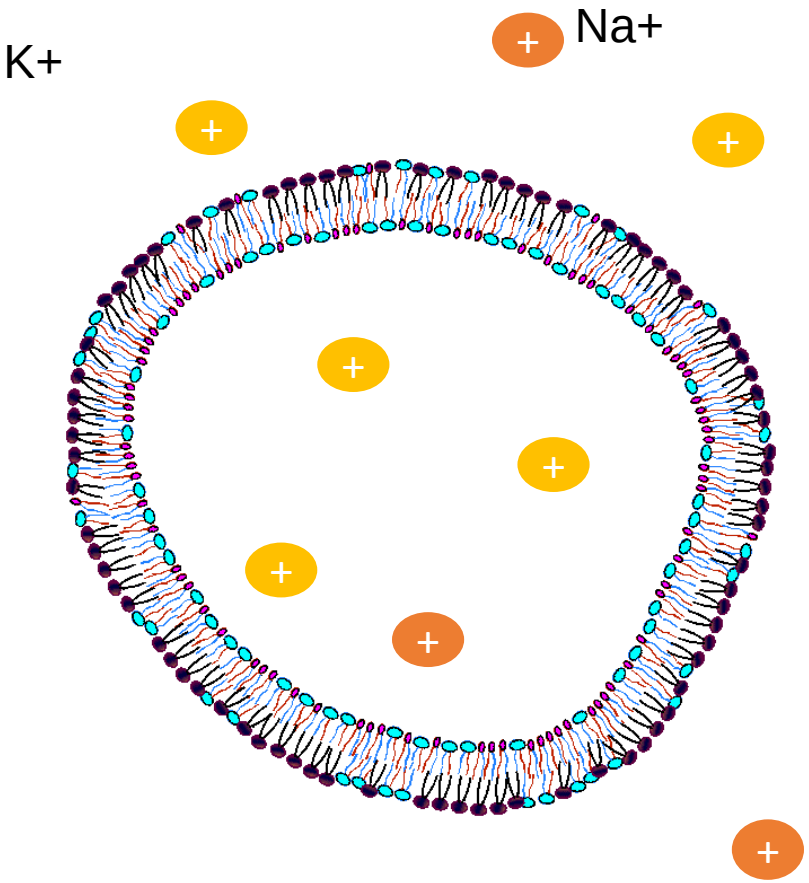

Action Potential

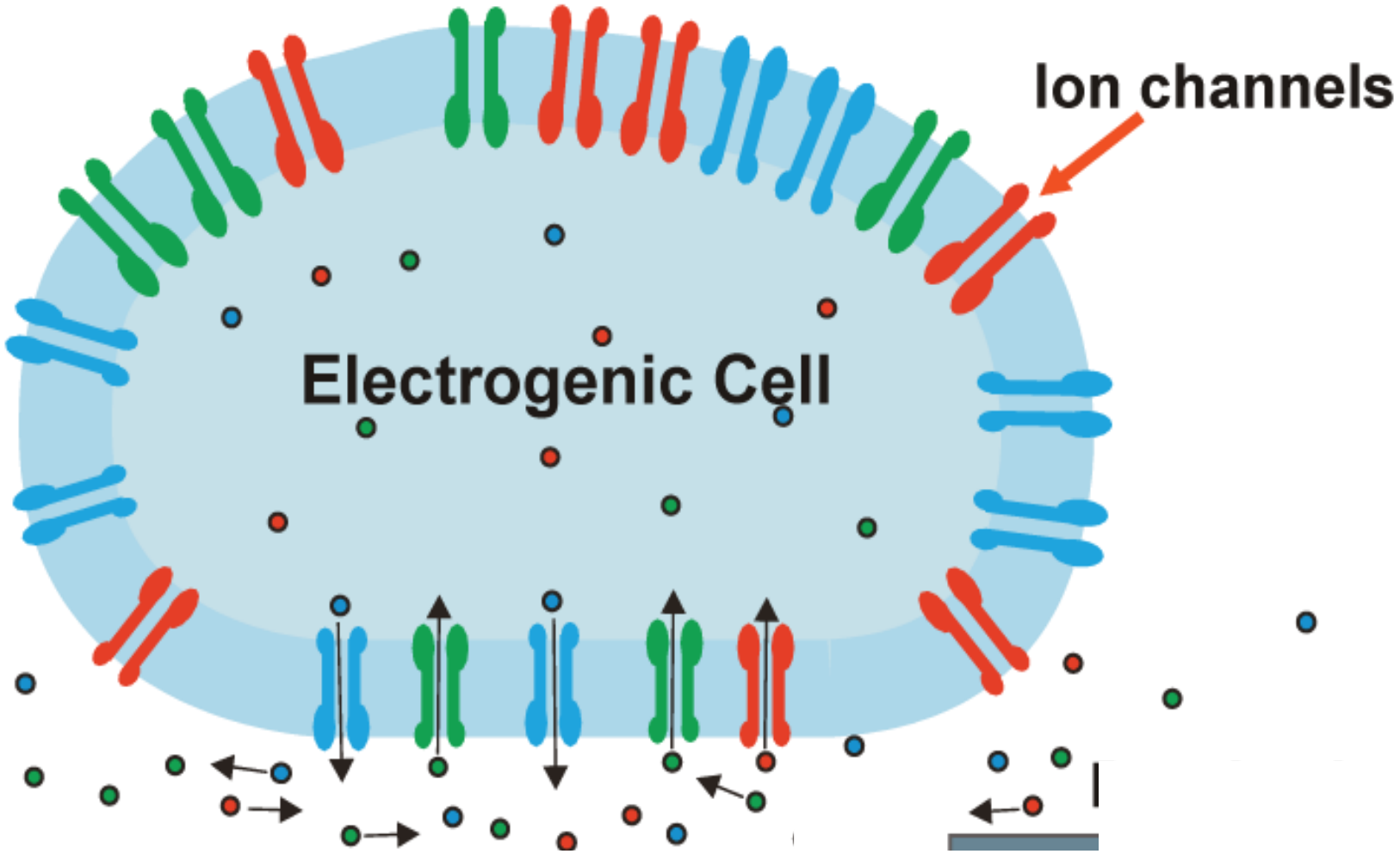

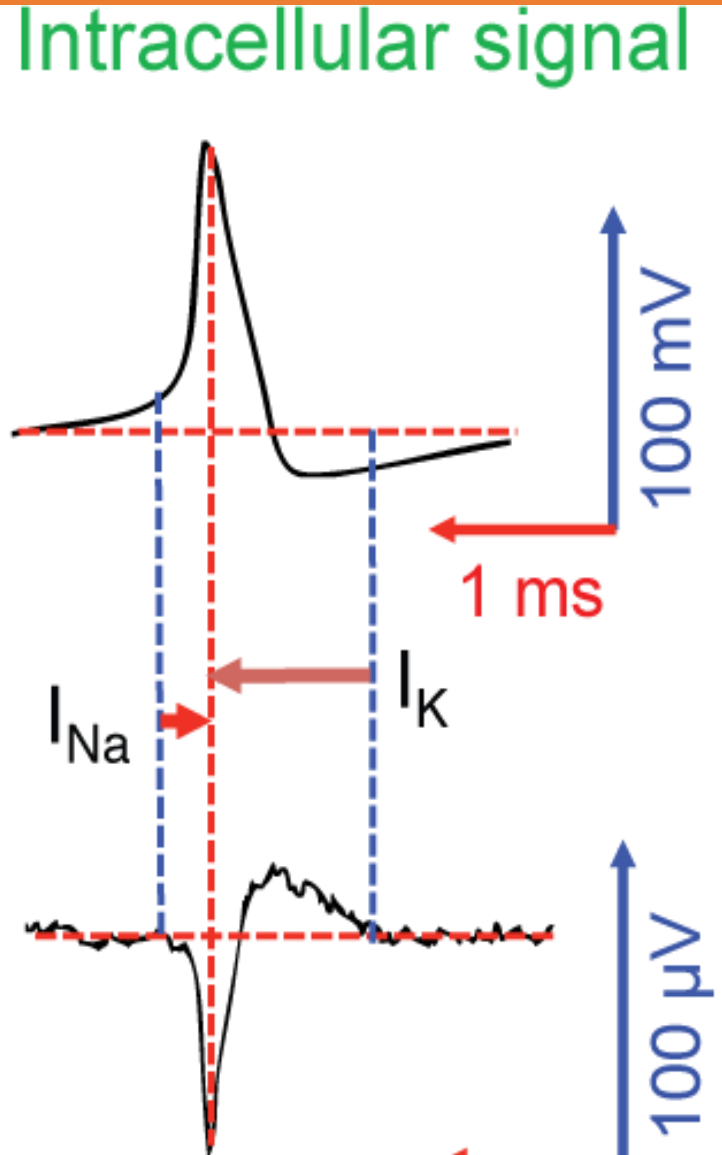

Action Potential

- All potentials result from ions moving across membranes
- Each ion that can flow through channels reaches equilibrium between two forces.
- Equilibrium potential for each ion determined by Nernst Equation.

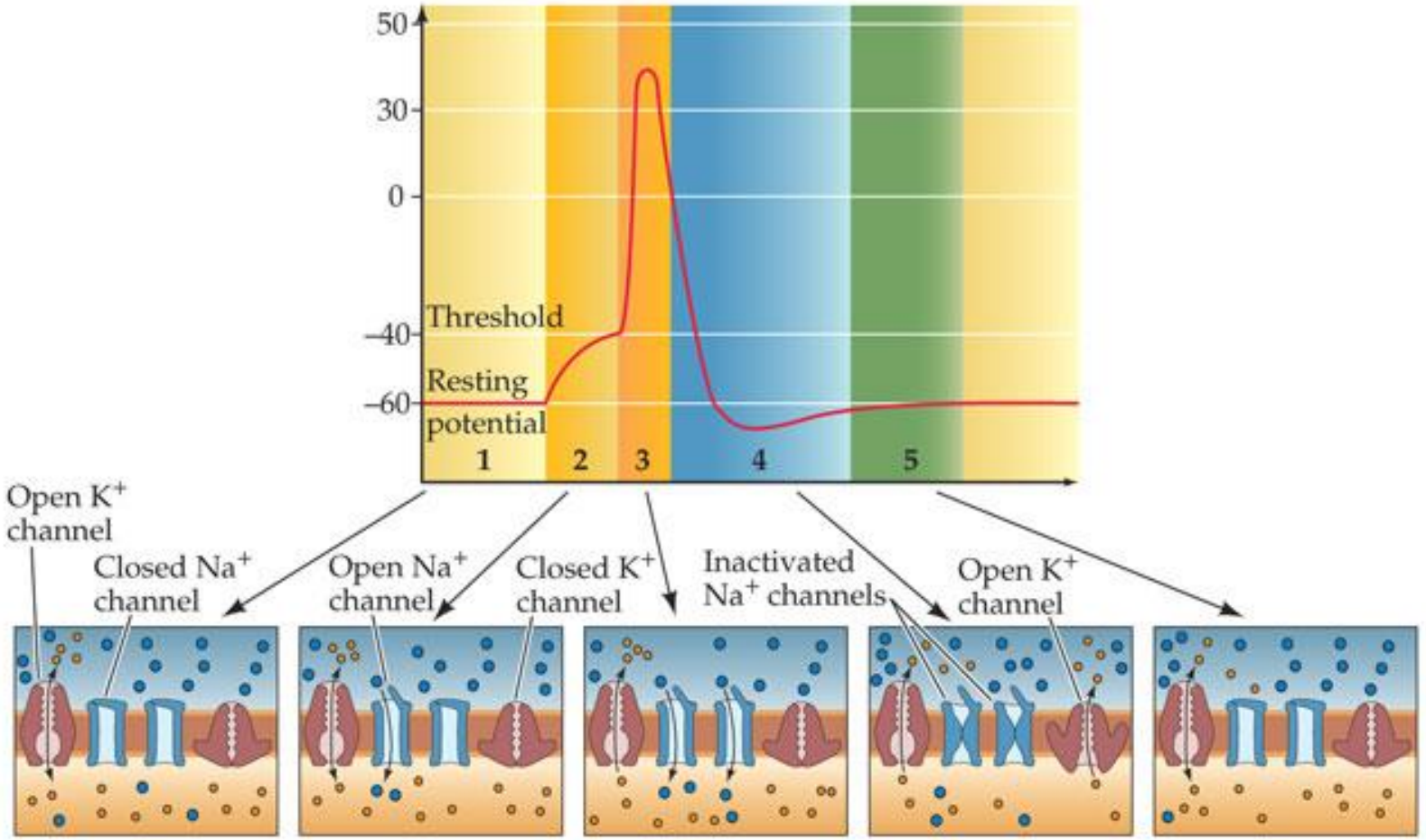

Electro-genic cells

- Nernst equation gives a formula that relates the numerical values of the concentration gradient to the electric gradient that balances (for example inside and outside)

$$E = \frac{RT}{zF} \ln \frac{[\text{ion outside cell}]}{[\text{ion inside cell}]}$$

R = 8.314 472(15) J K^{-1} mol^{-1}

z is the number of moles of electrons transferred in the cell

F = 9.648 533 99(24)×10^4 C mol^{-1}

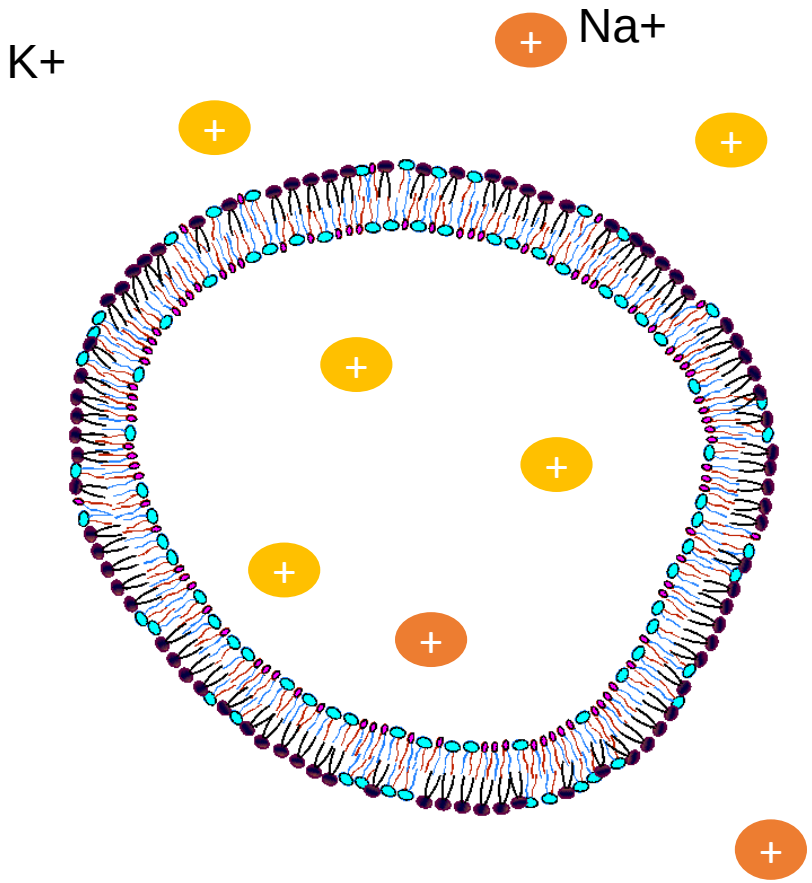

Nernst Equation

E_{K+} = +58 mV $\log_{10}$ ([K+] outside/[K+] inside).

(+58 mV for room temperature, squid axon).

E_{K+} = 58 mV $\log_{10}$ 1/20 = -75 mV.

E_{Na+} = 58 mV $\log_{10}$ 10/1 = + 58 mV.

E_{Cl-} = -58 mV $\log_{10}$ 15 = -68 mV.

E_{Ca++} = +58 mV $\log_{10}$ 10,000 = +220 mV.

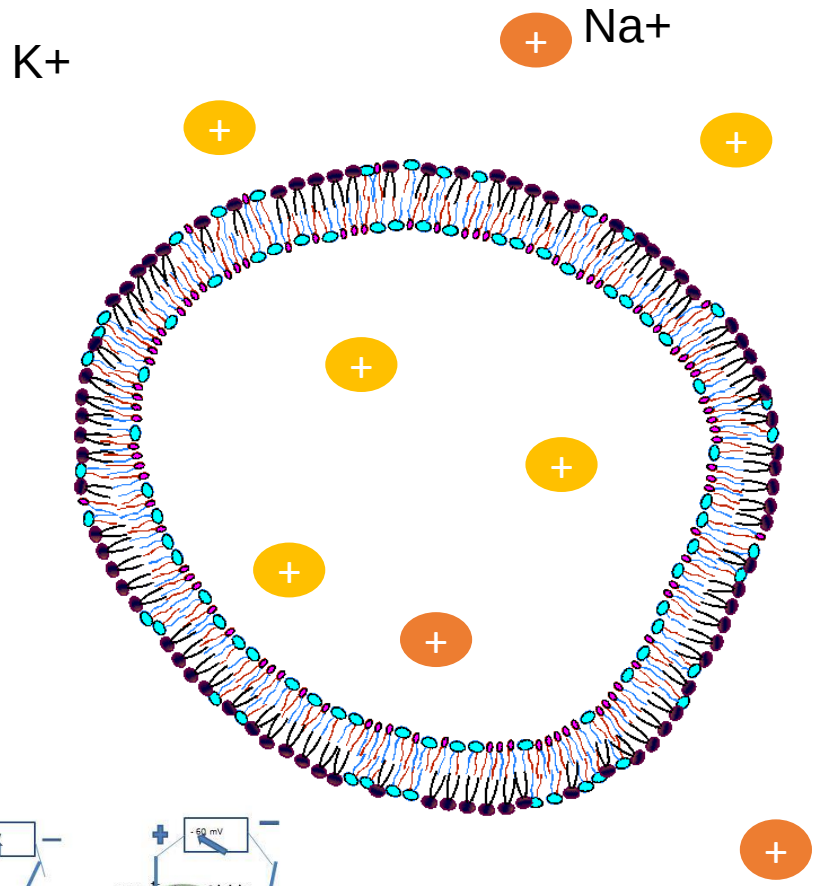

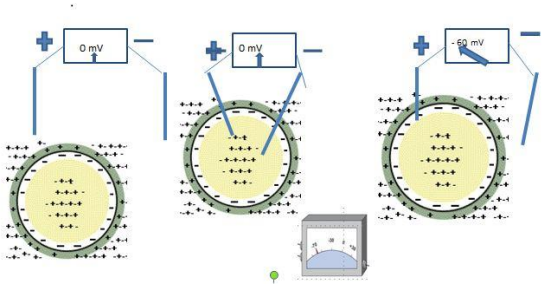

Extracellular Recoding

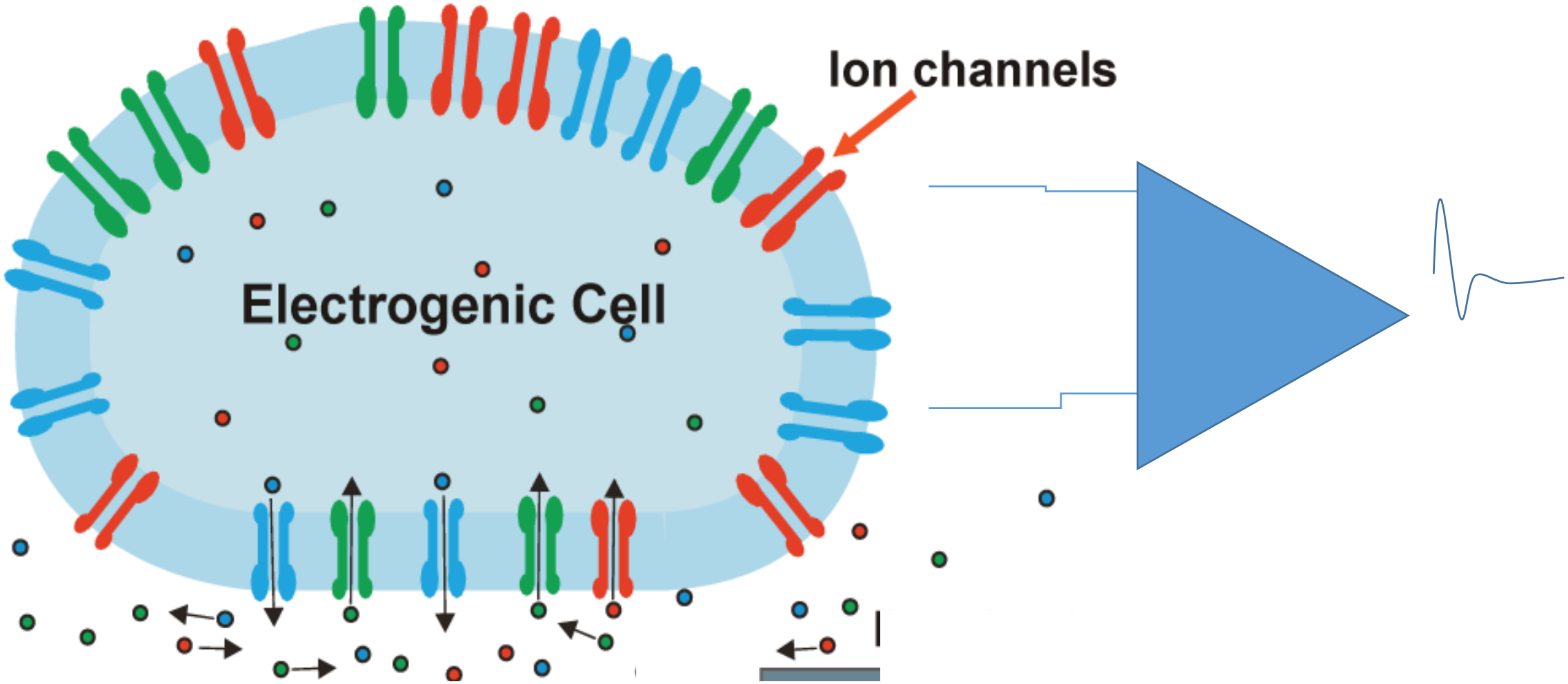

Bio-Potential

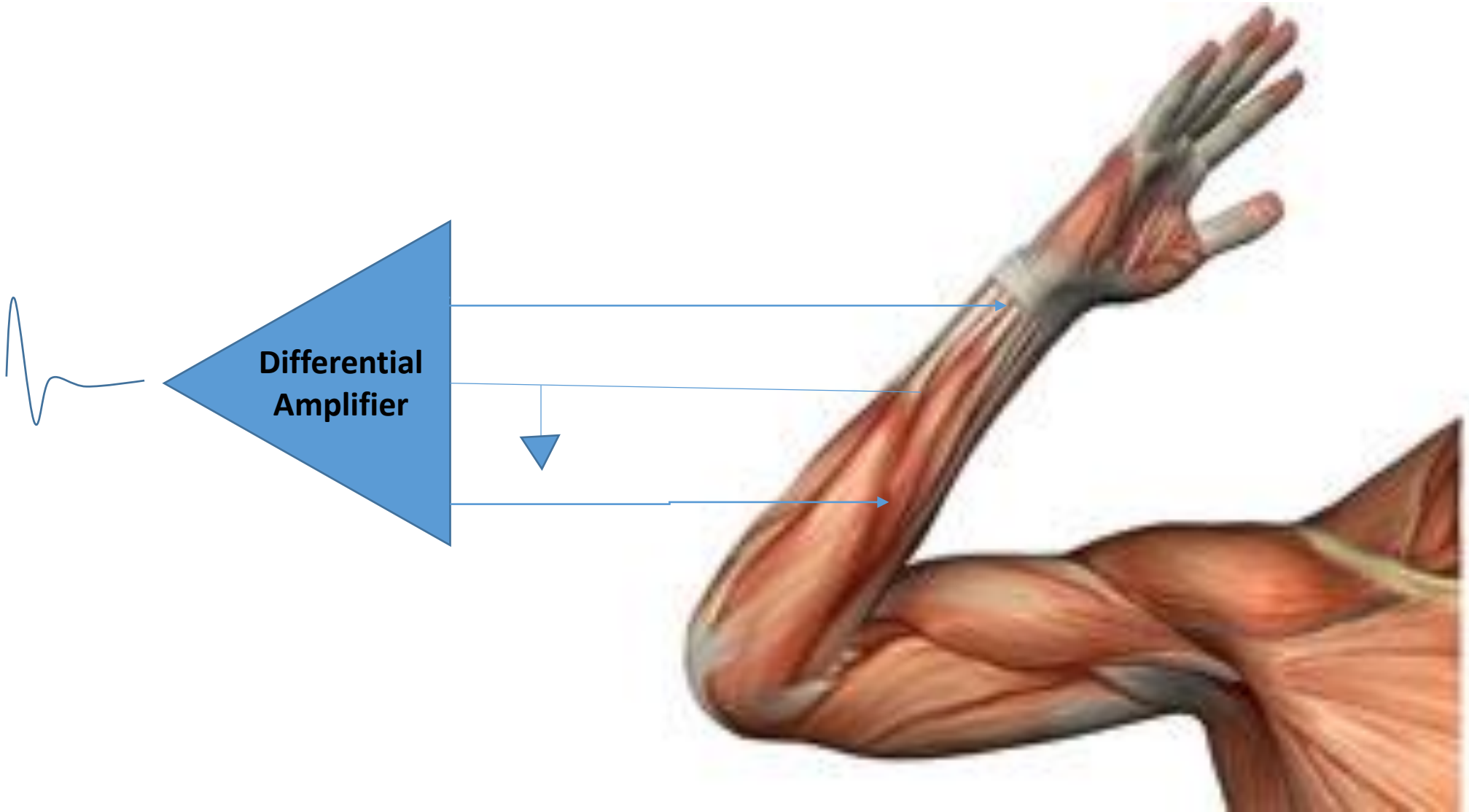

Example: Differential Amplifier

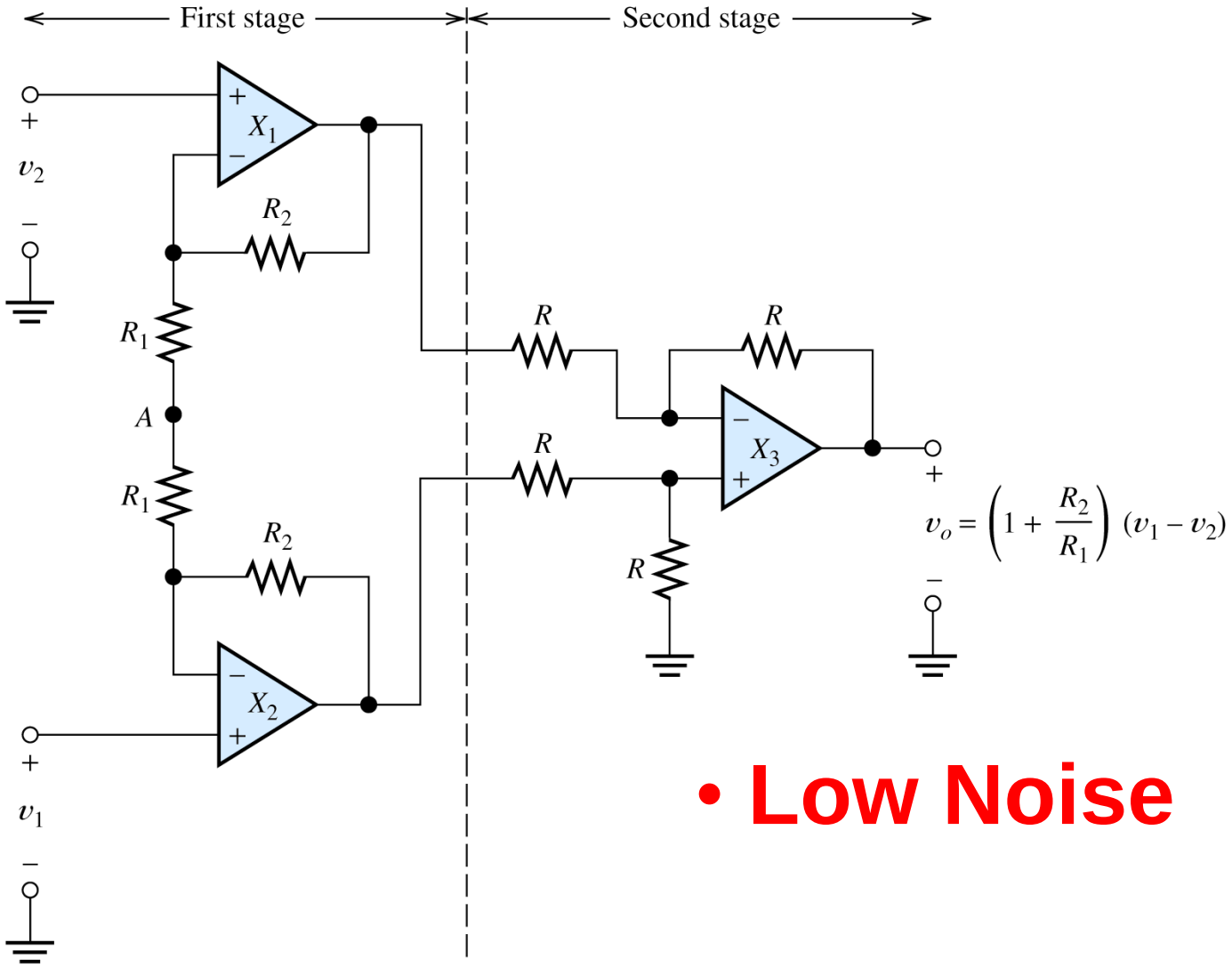

- **Voltage Gain**
- **Frequency Bandwidth**
- **Fully Differential**
- **Low Noise**

Voltage Amplifier: GB product

GB Product : $f_1 = G_d f_c$

f_1 = 10 MHz

By using GB production equation

$f_1 = G_d f_c$

$f_c = f_1 / G_d$ = 10 MHz / 20 V/mV

$= 10 \times 10^6 / 20 \times 10^3$

= 500 Hz

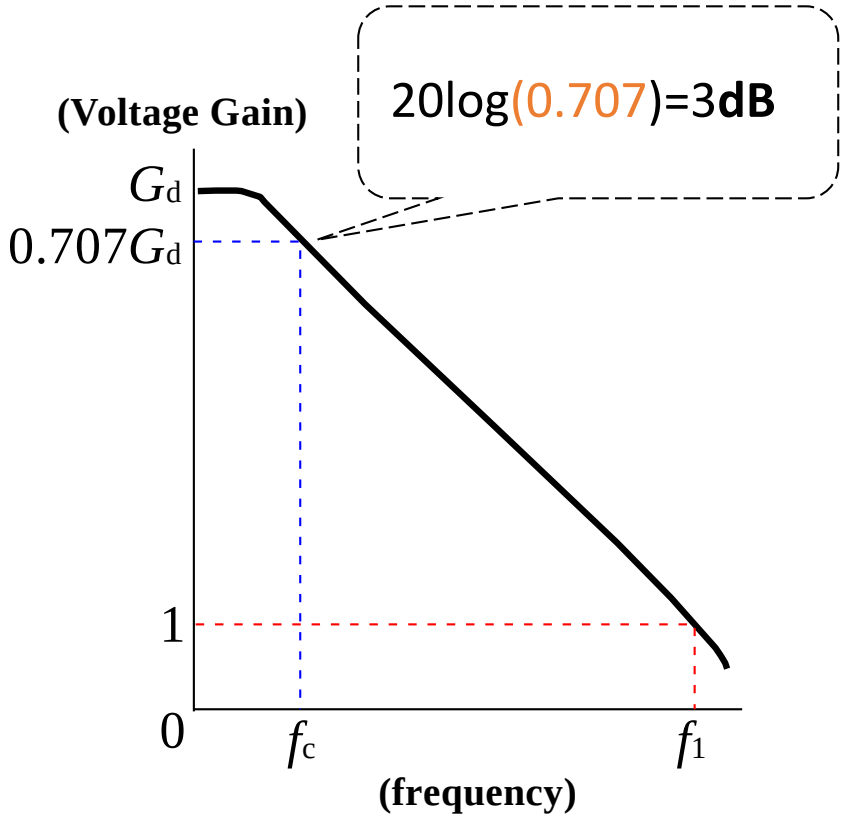

Voltage Amplifier: GB product

GB Product : $f_1 = G_d f_c$

f_1 = 20 MHz

By using GB production equation

$f_1 = G_d f_c$

$f_c = f_1 / G_d$ = 20 MHz / 30 V/mV

= 10 × …….. / …….

= ……. Hz

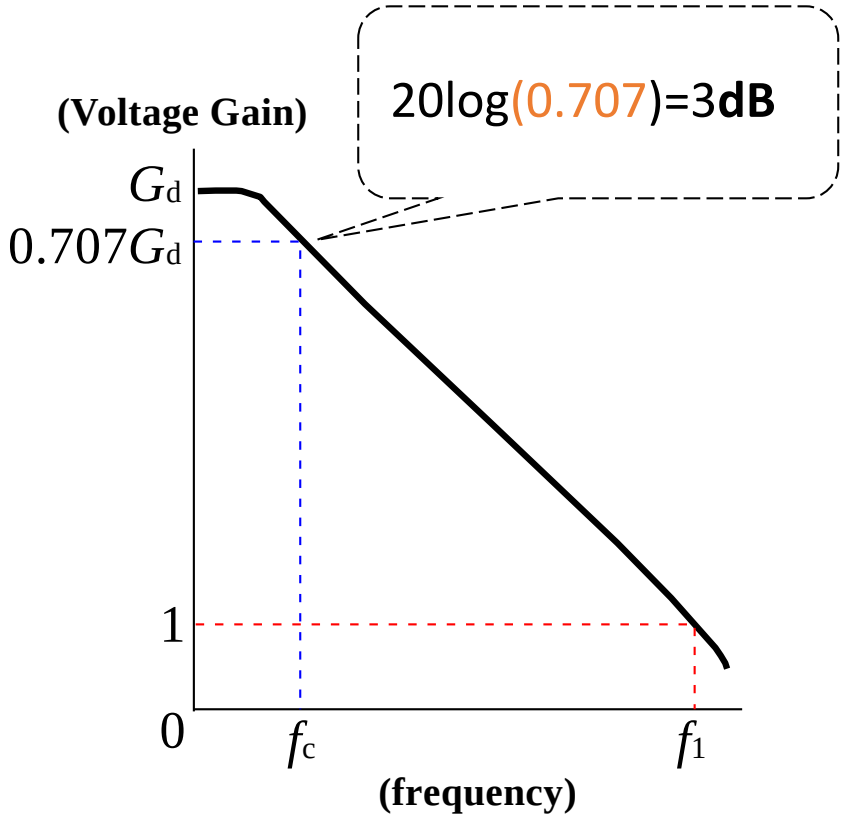

Rectifier

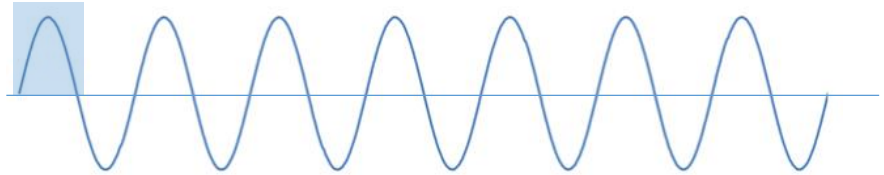

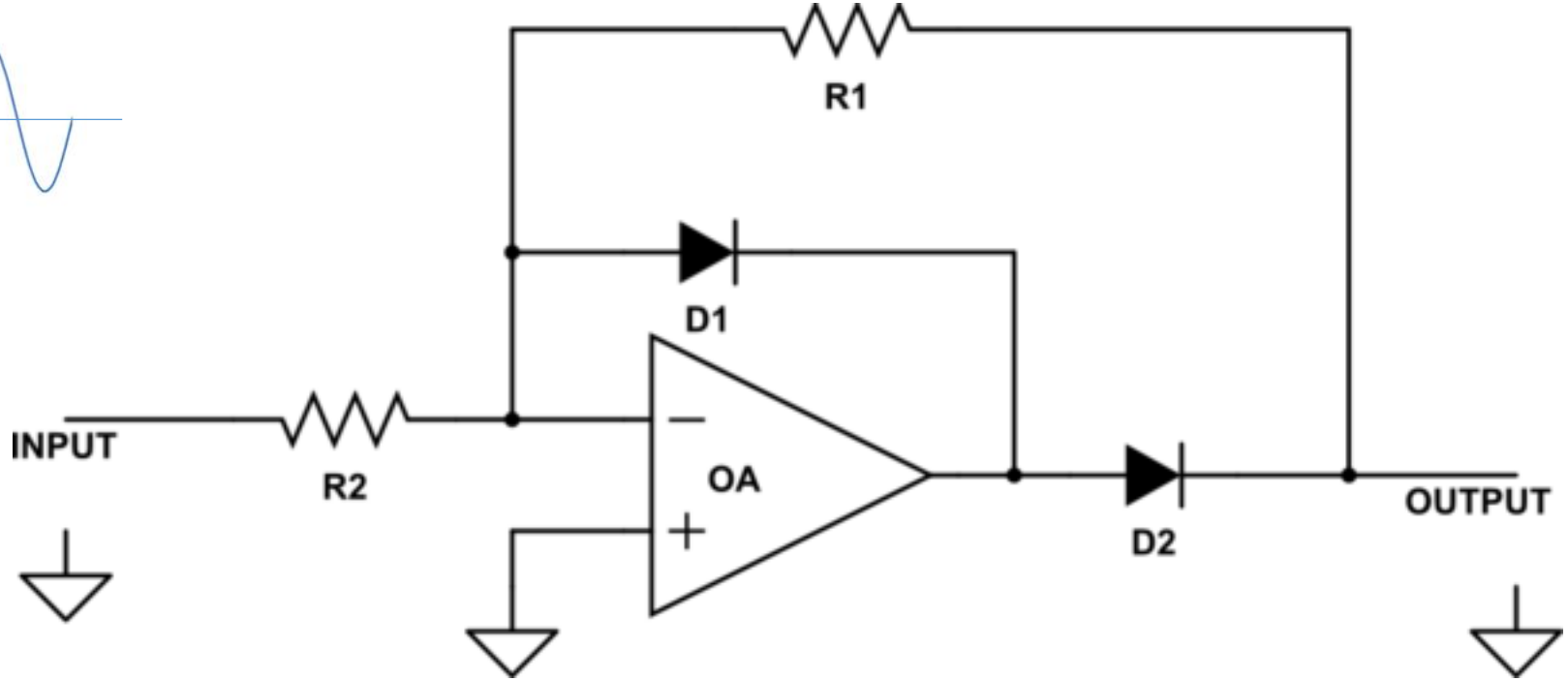

Rectifier

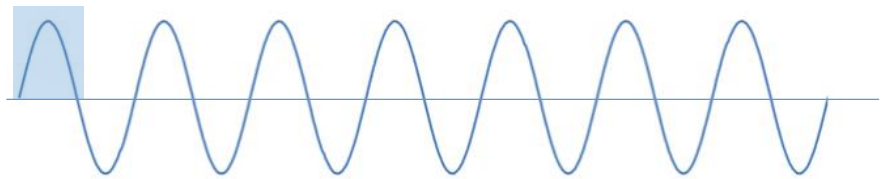

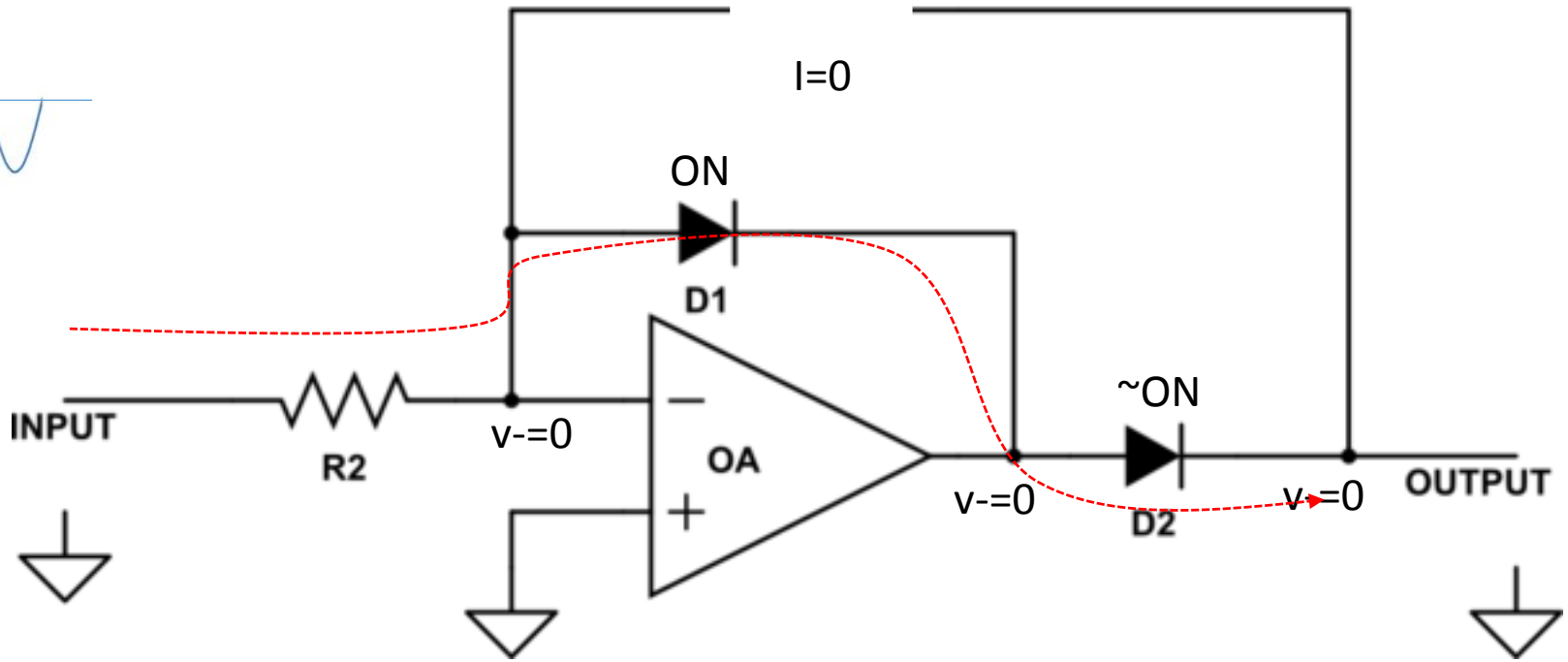

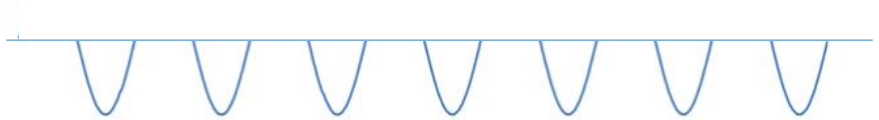

Rectifier

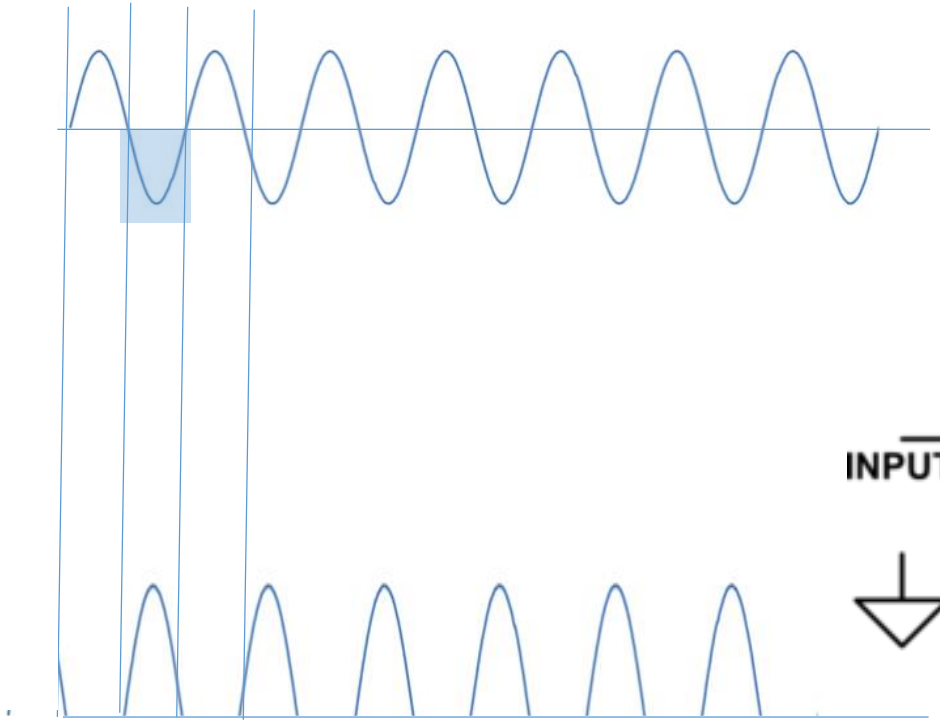

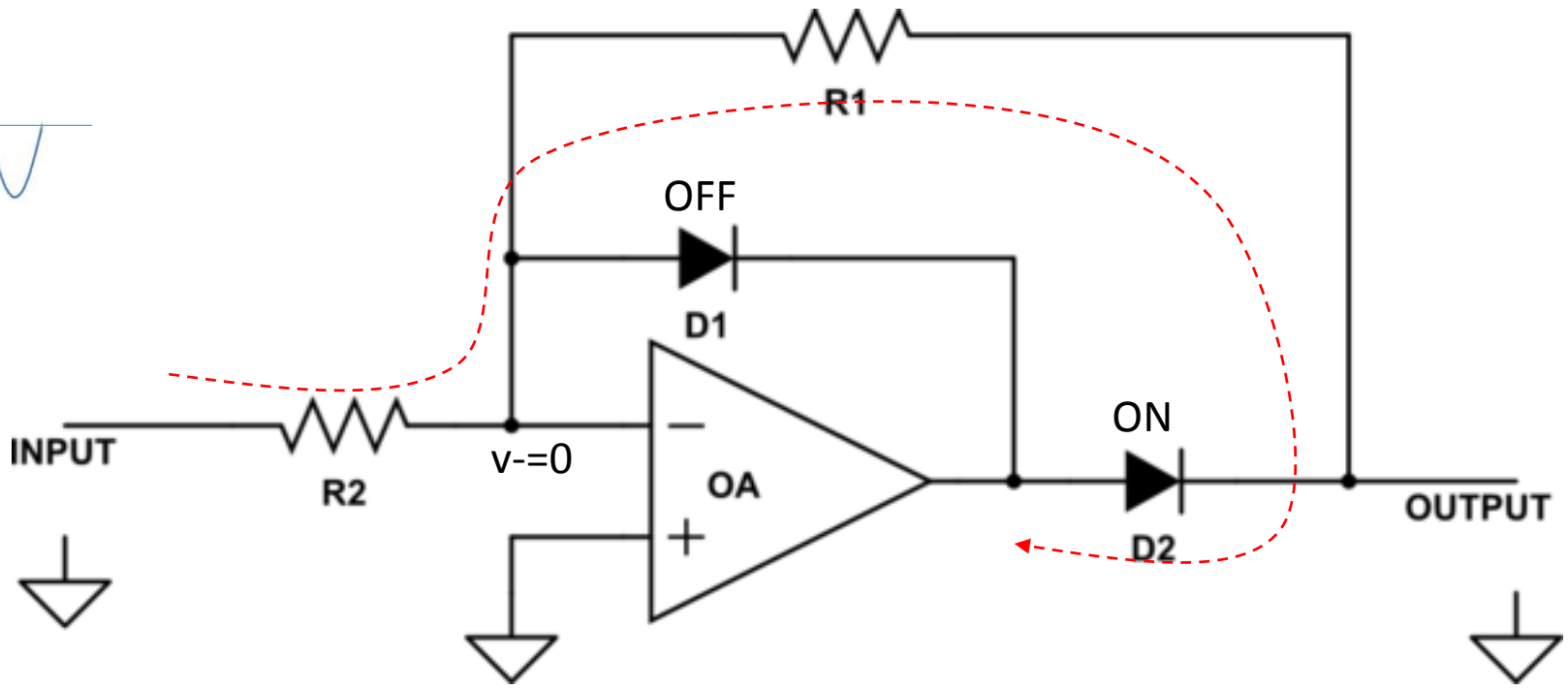

Vout=-R1/R2 8Vin

Nonlinear Voltage Amplifier: Logarithmic I

$$V_{\text{out}} = -V_{\text{T}} \ln\left(\frac{V_{\text{in}}}{I_{\text{S}} R}\right)$$

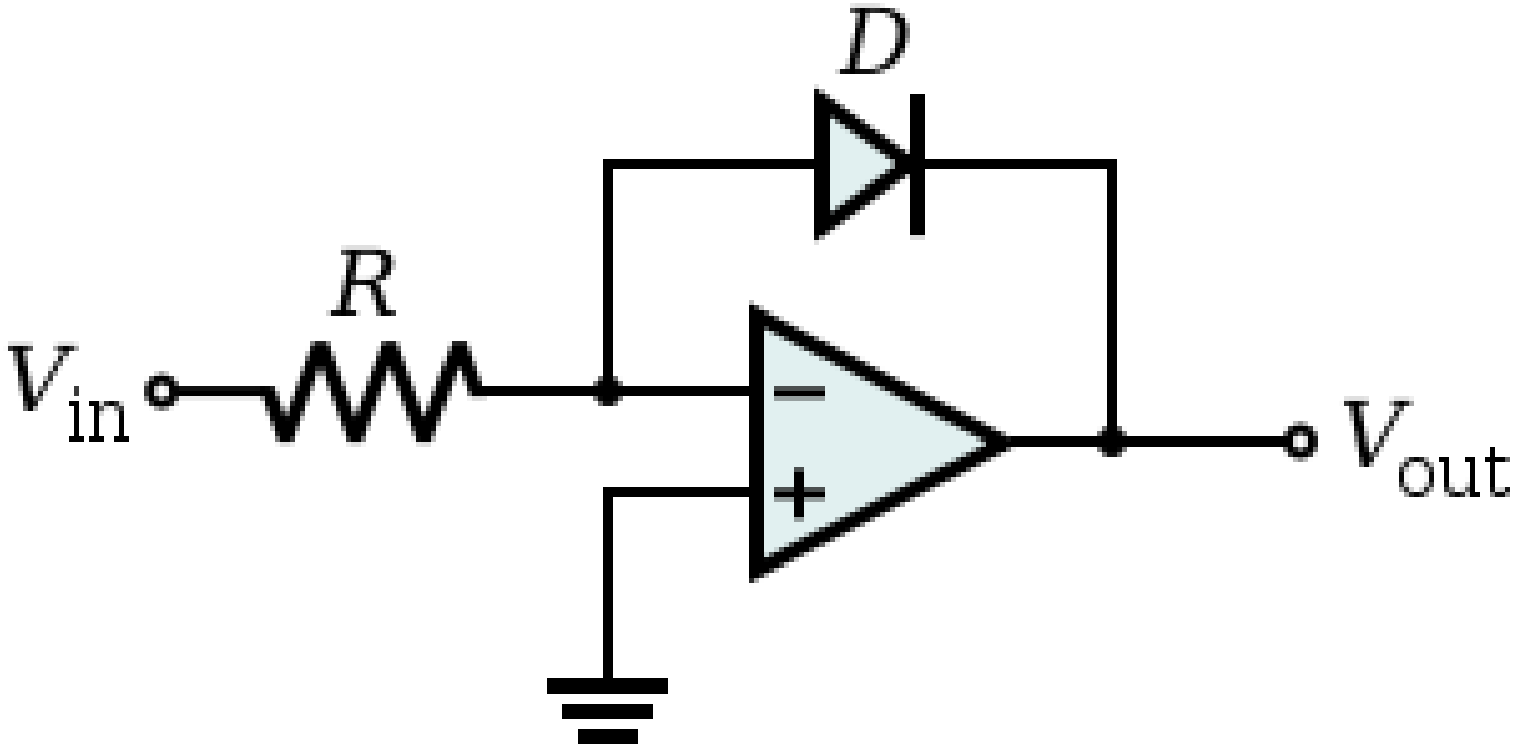

Nonlinear Voltage Amplifier: Logarithmic II

$$V_{BE} = -V_{out}$$

$V_{out} = V_T \mathrm{Ln}(V_{in}/I_{S0}R_1)$

$I = I_C = V_{in}/R1$

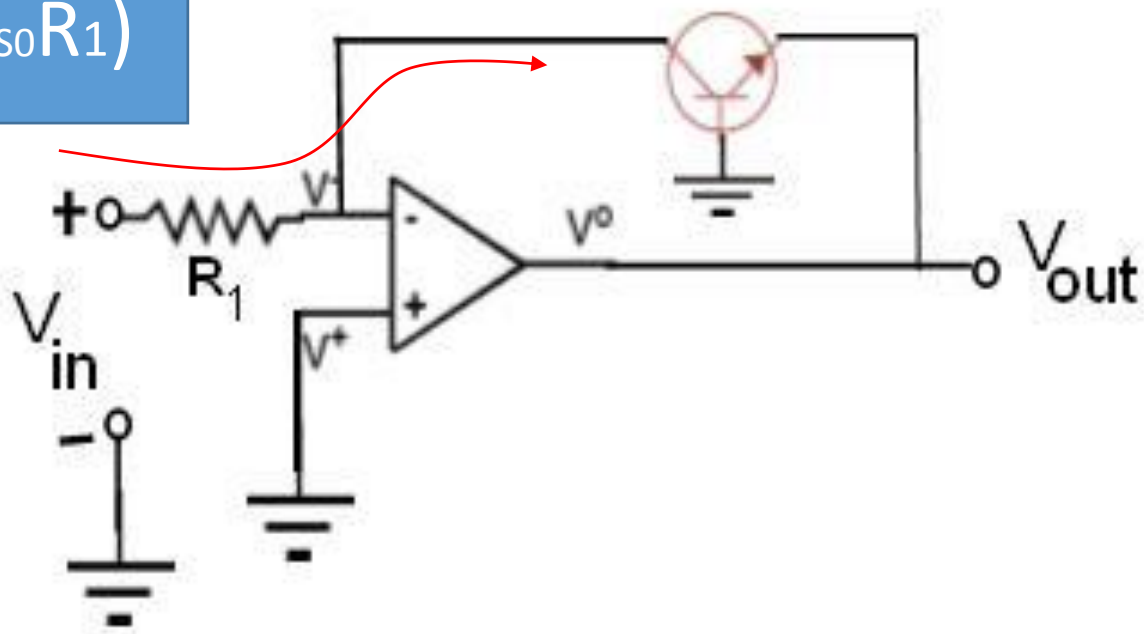

$$V_{BE} = V_T \ln \frac{I_C}{I_{SO}} \rightarrow I_C = I_{SO}(e^{V_{BE}/V_T} - 1) \approx I_{SO} e^{V_{BE}/V_T}$$

Summary

- Ideal Operational Amplifier
- Inverting and Non-inverting Amplifier
- Integrator and differentiator
- Rectifier
- Logarithmic Amplifier

EECS4641: Medical Devices

Lecture #4: Sensors and Amplifiers

Prof. Ebrahim Ghafar-Zadeh
Department of Electrical Engineering and Computer Science
Lessoned School of Engineering
York University

Jan. 15th, 2016

YORK UNIVERSITÉ UNIVERSITY

Force Sensor

- Force Sensor Resistor

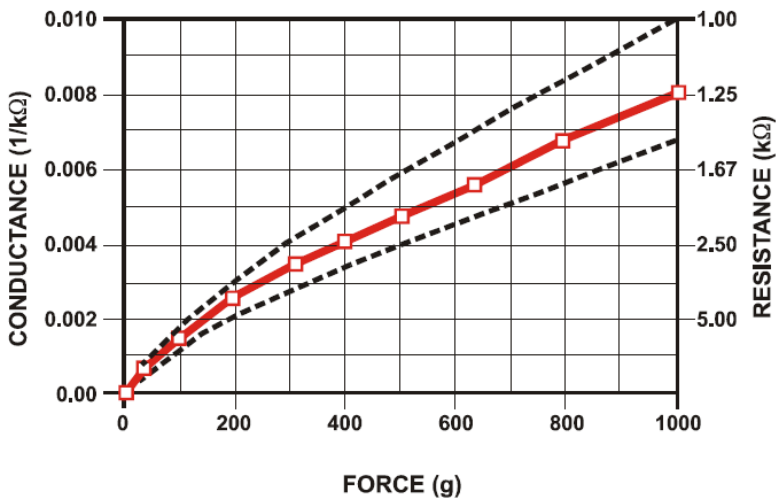

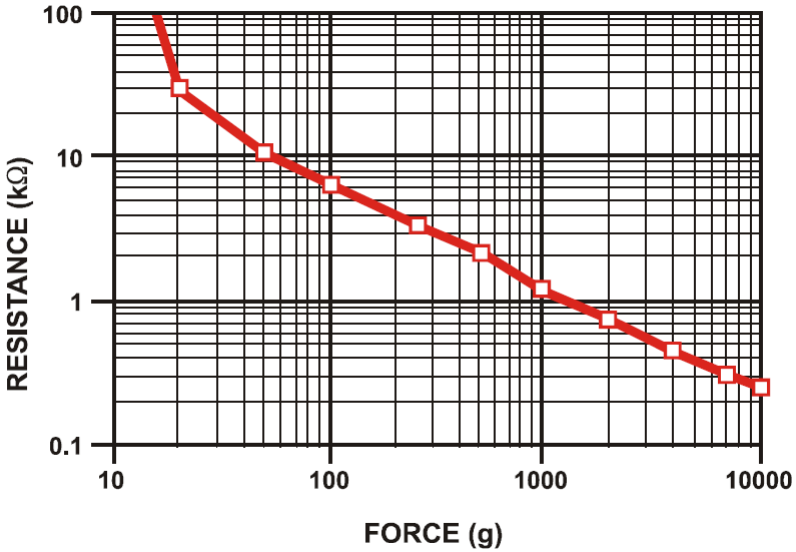

Force to Voltage converter

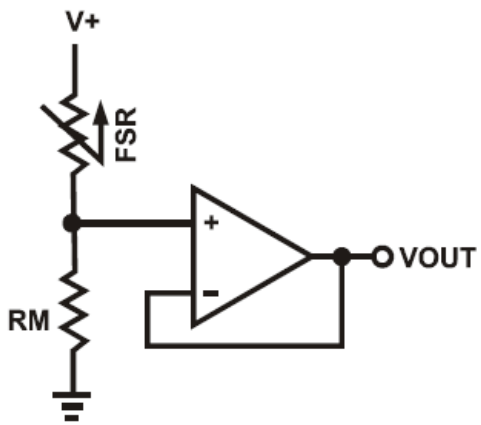

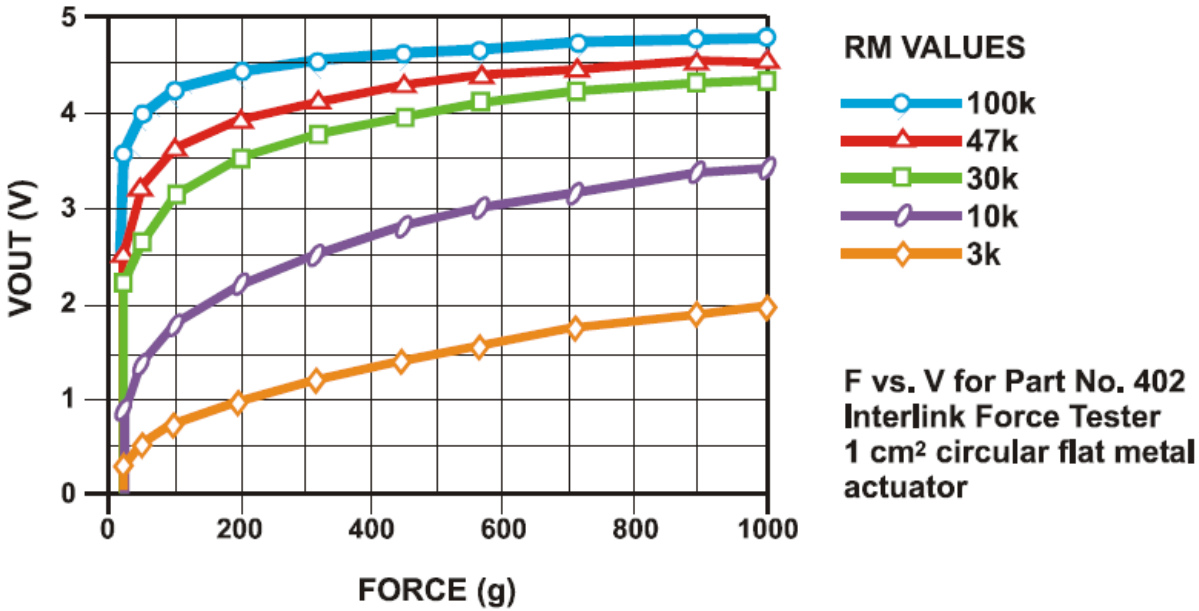

Vout=(Rm/(Rm+Rfrs)xV+

Force to voltage converter 2

In this example, we assume that we have two different power supplies (Bottom V+ and top V+). To calculate output voltage, first we can cancel the top V+ =0 and obtain Vout1 and then cancel the bottom V+=0 and calculate Vout2. And finally obtain the summation of Vout1 and Vout2.

1) Step 1: Vout1=[(Rm/(Rm+Rfsr)]x[(1+R2/(R2+R1+R3/2)xV+

2) step 2:

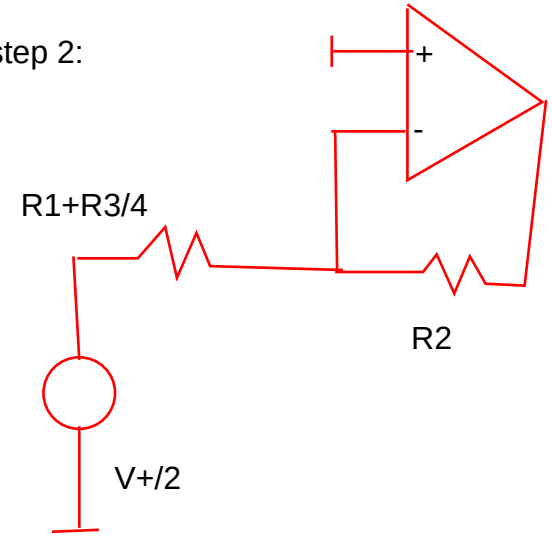

Vout2=-(R2/(R1+R3/4))xV+/2

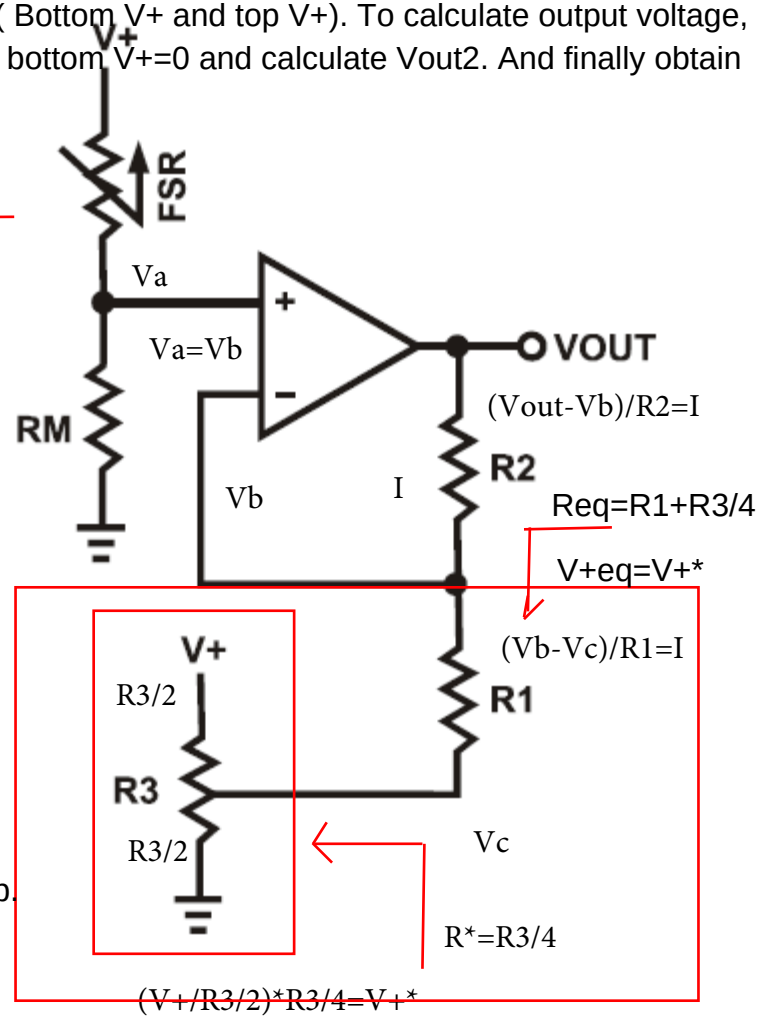

Vout1+Vout2=Vout → You can simplify the relationship.

Force to voltage converter 3

2(Vb-Va)/R4=(Vb-Vout)/R4

2(Vb-Va)=(Vb-Vout)

2Va-Vb=Vout

Va=Rm/(Rm+Rfrs)xV+

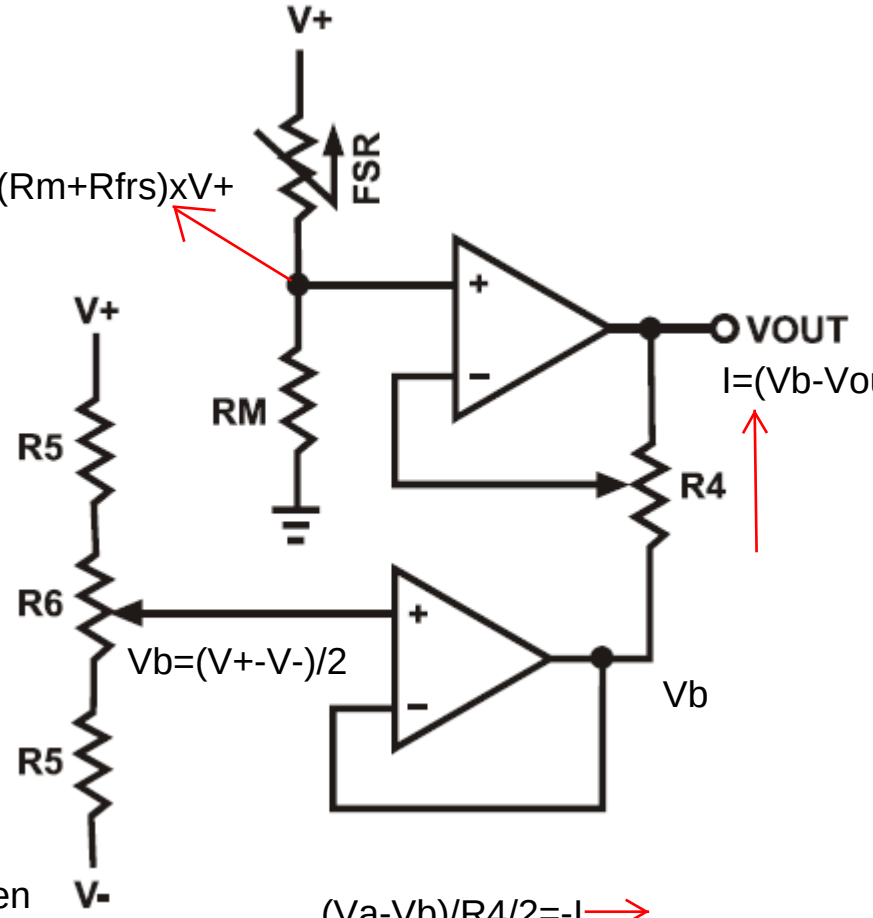

I=(Vb-Vout)/R4

(Va-Vb)/R4/2=-I

Please simplify and obtain the relationship between Rfrs and Vout. Is it linear?

General Purpose Processors

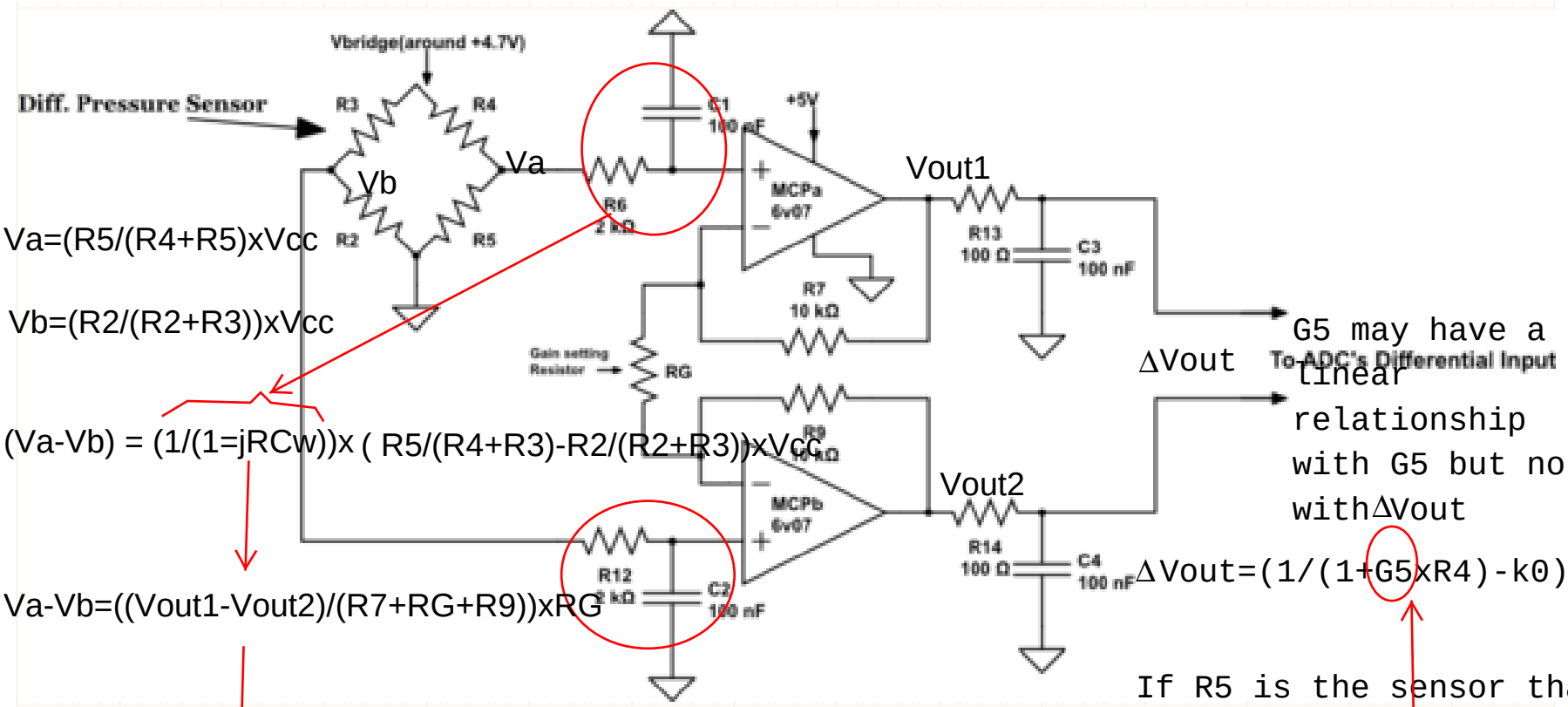

Va=(R5/(R4+R5)xVcc

Vb=(R2/(R2+R3))xVcc

(Va-Vb) = (1/(1=jRCw))x (R5/(R4+R3)-R2/(R2+R3))xVcc

Va-Vb=((Vout1-Vout2)/(R7+RG+R9))xRG

G5 may have a linear relationship with G5 but not with ΔVout

ΔVout=(1/(1+G5xR4)-k0)k

If R5 is the sensor than 1/R5=G5 (Conductance)

$$\underbrace{\text{Vout1-Vout2=(1/(1+jRCw))}}_{=1}\underbrace{\text{(R5/(R4+R5)-R2/(R2+R3))}}_{=k0\text{ (constant)}}\underbrace{\text{xVccx(R7+RG+R9)/RG}}_{=k\text{ (constant)}} = \text{(R5/(R5+R4)-k0)k= }\Delta\text{Vout}$$

Force and EMG correlation

Power= Fxd

Power = work is equal to force multiplied by distance

Motor Units

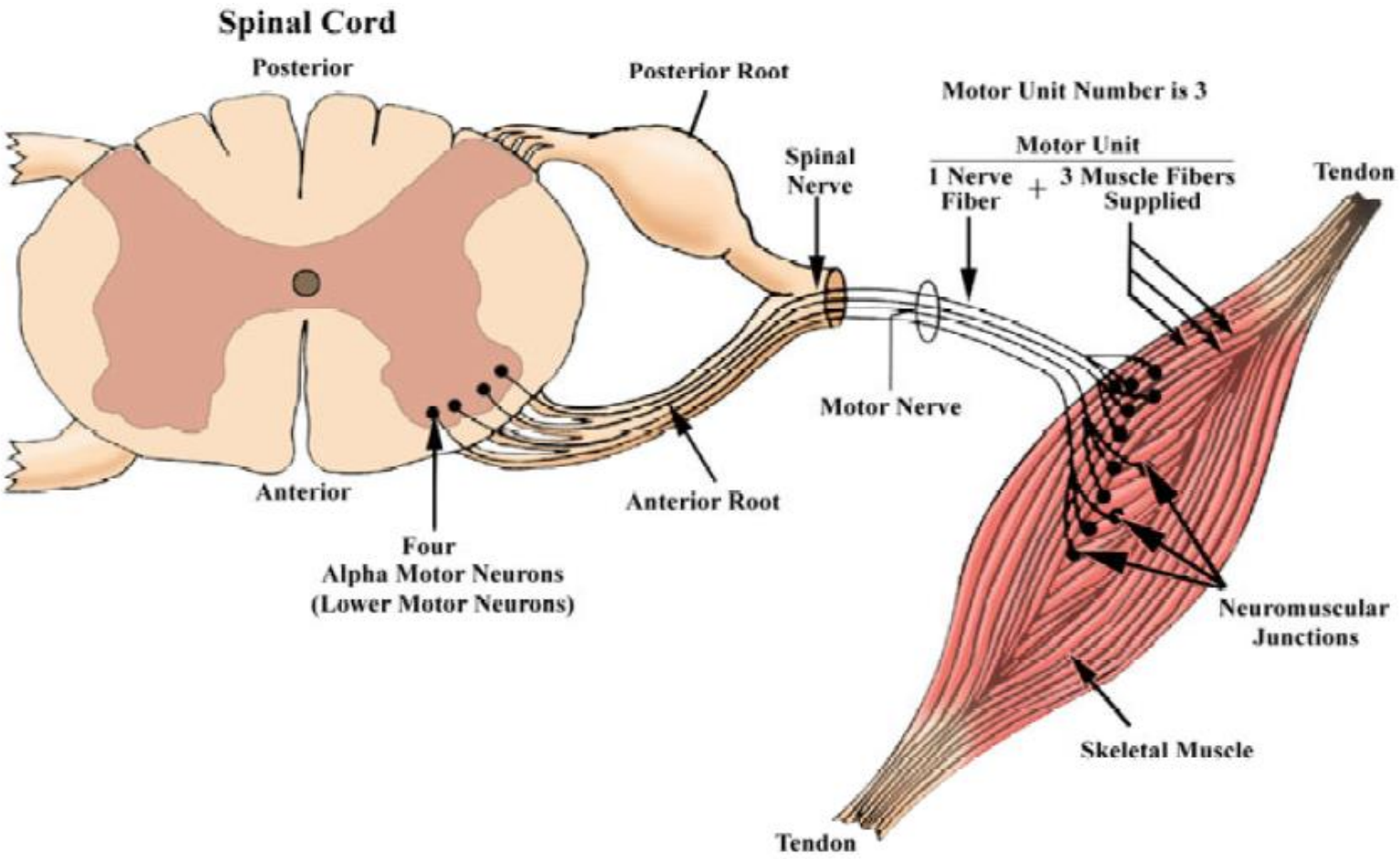
Spinal Cord
Posterior
Posterior Root
Motor Unit Number is 3
Motor Unit
1 Nerve Fiber + 3 Muscle Fibers Supplied
Spinal Nerve
Tendon
Motor Nerve
Anterior
Anterior Root
Four
Alpha Motor Neurons
(Lower Motor Neurons)
Neuromuscular Junctions
Skeletal Muscle
Tendon

Integrating EMG of muscles

- **Cardiac muscle** is found only in the heart. When it contracts, blood circulates, delivering nutrients to cells and removing cell waste.
- **Smooth muscle** is located in the walls of hollow organs, such as the intestines, blood vessels or lungs. Contraction of smooth muscle changes the internal diameter of hollow organs, and is thereby used to regulate the passage of material through the digestive tract, control blood pressure and flow, or regulate airflow during the respiratory cycle.
- **Skeletal muscle** derives its name from the fact that it is usually attached to the skeleton. Contraction of skeletal muscle moves one part of the body with respect to another part, as in flexing the forearm. Contraction of several skeletal muscles in a coordinated manner moves the entire body in its environment, as in walking or swimming.

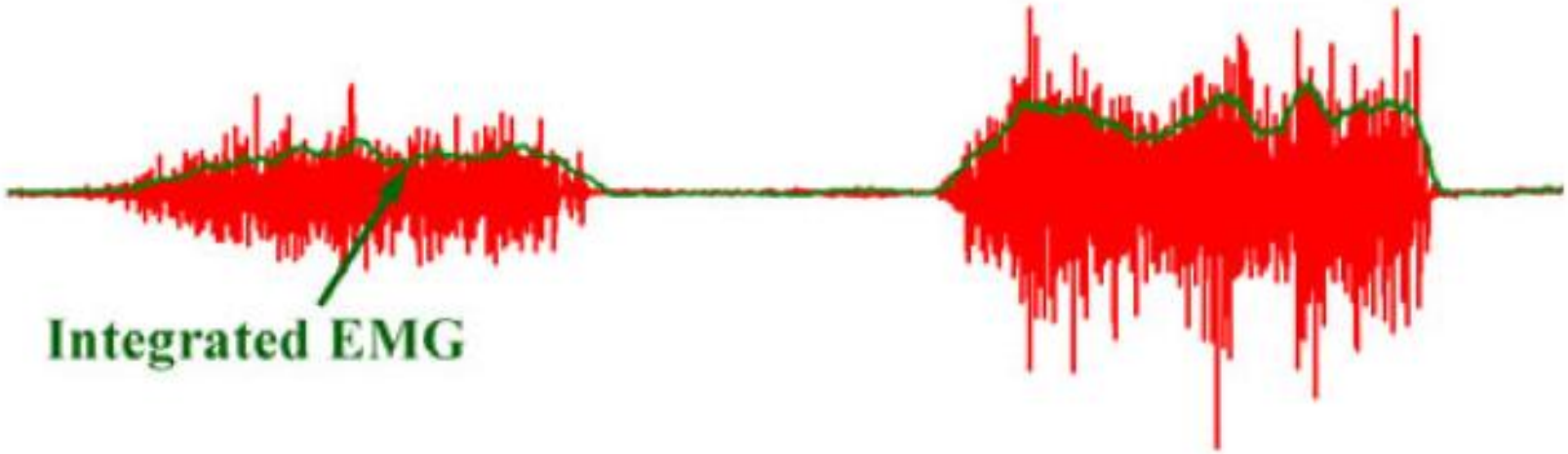

Laboratory: Definitions and Concepts

The primary function of muscle, regardless of the kind, is to *convert chemical energy to mechanical work*, and in so doing, the muscle shortens or contracts.

Physiologically, the degree of skeletal muscle contraction is controlled by:

1. Activating a desired number of motor units within the muscle, and
2. Controlling the frequency of motor neuron impulses in each motor unit.

Power is defined as the amount of work done per unit of time. **Dynamometry** means the measurement of power (*dyno* = power, *meter* = measure,) and the graphic record derived from the use of a dynamometer is called a **dynagram**.

Summary

- Force Sensor
- ~~Filter~~
- Motor Units

It is expected that the student design and analysis of interface circuit used for interface to sensors using OPAMS.

Thank You

Next Class

Filter 1

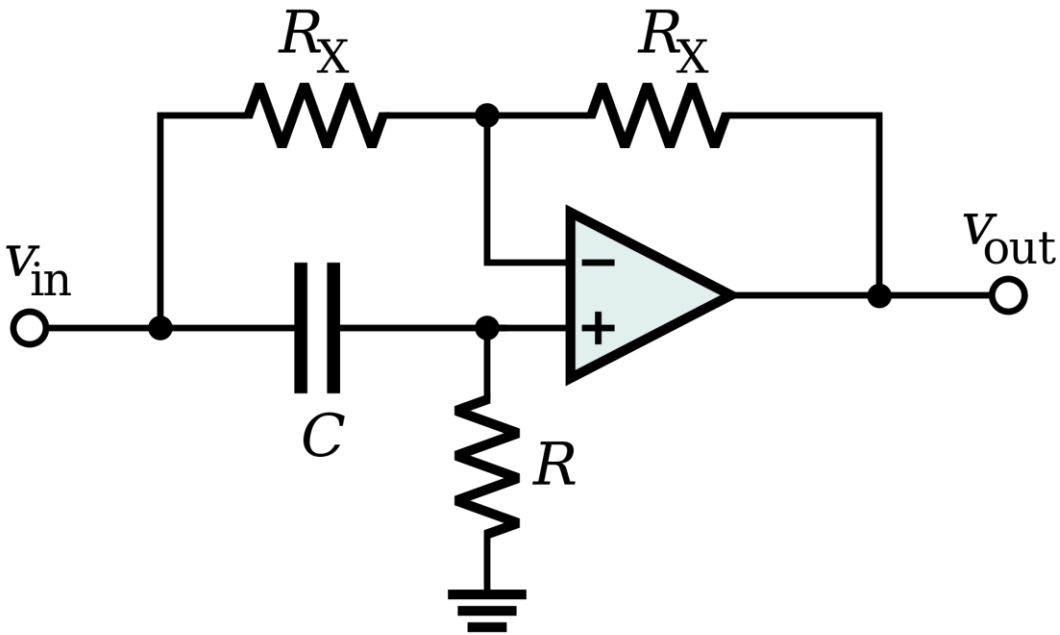

Filter 2

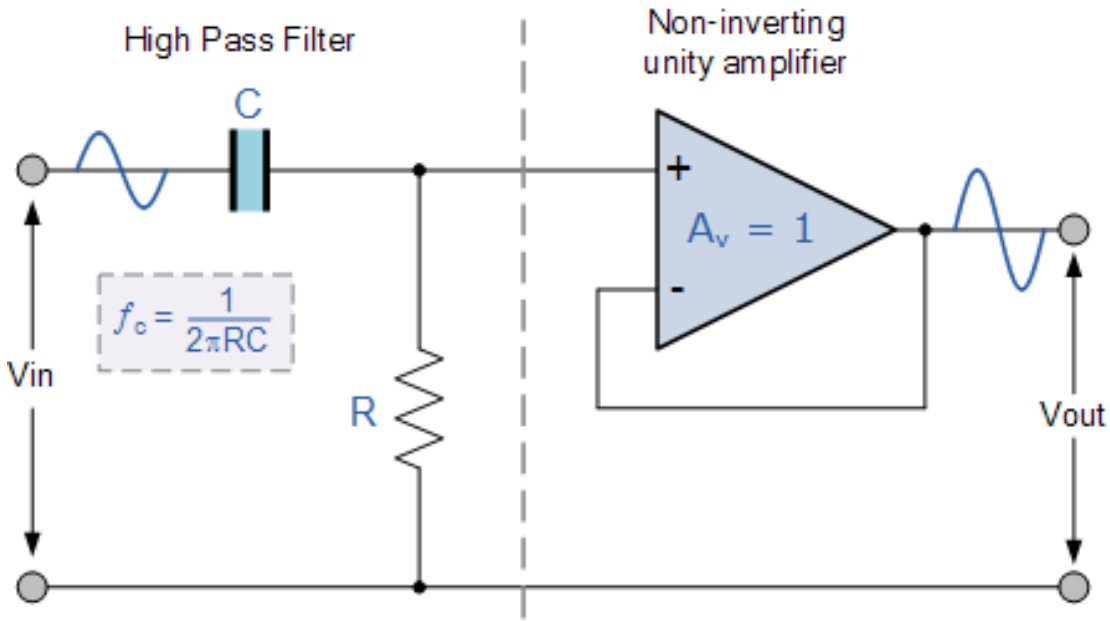
High Pass Filter
Non-inverting
unity amplifier
C
+
-
$A_v = 1$
$f_c = \frac{1}{2\pi RC}$
Vin
R
Vout

Filter 3

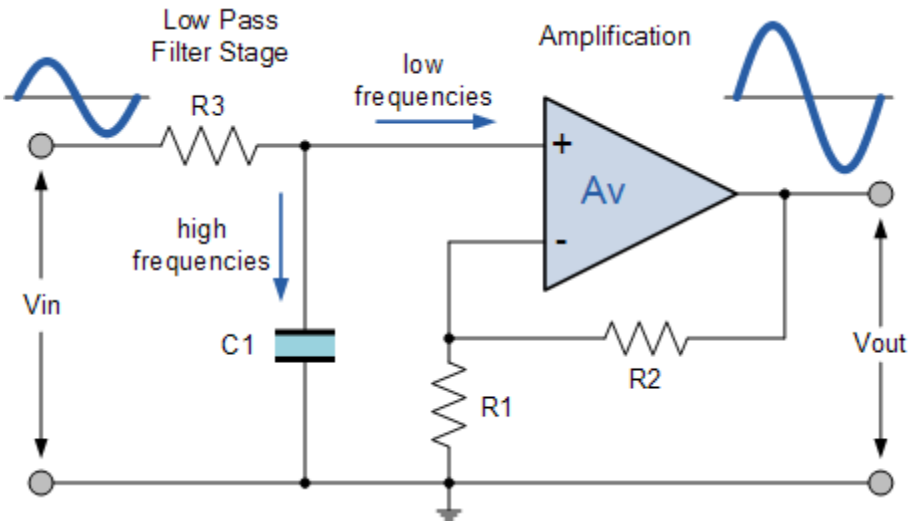
Low Pass
Filter Stage
Amplification
low
frequencies
R3
+
Av
-
high
frequencies
Vin
C1
R2
R1
Vout

EECS4641: Medical Devices

Lecture #4: Sensors and Amplifiers and EEG

Ebrahim Ghafar-Zadeh
Department of Electrical Engineering and Computer Science
Lessoned School of Engineering
York University

Jan. 18th, 2016

YORK UNIVERSITÉ UNIVERSITY

Opamp Interfaces

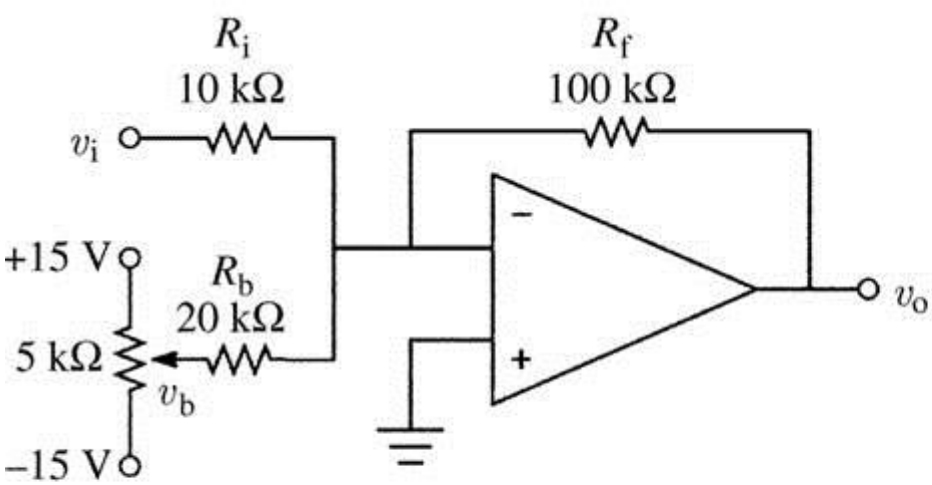

(a)

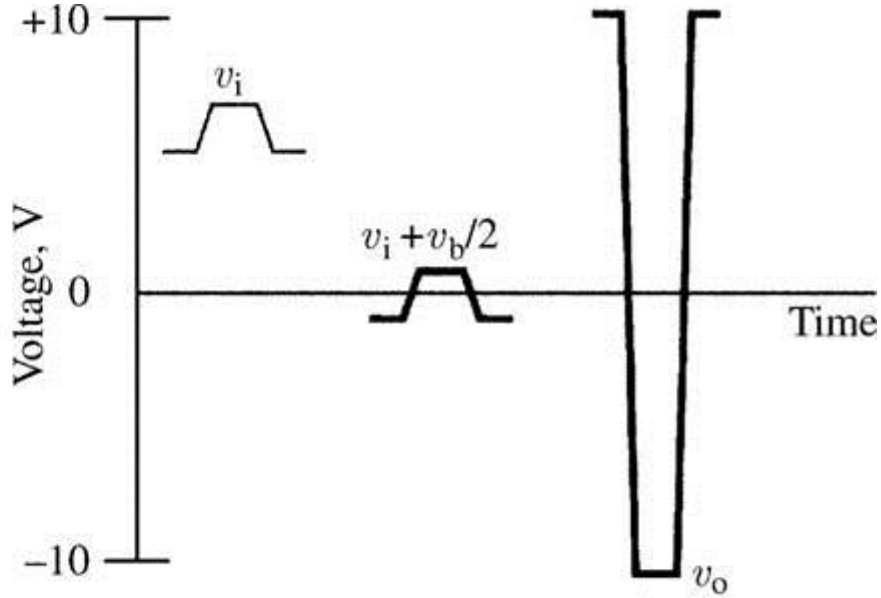

(b)

$$v_o = -R_f\left(\frac{v_i}{R_i} + \frac{v_b}{R_b}\right)$$

$$v_o = -10^5\left(\frac{v_i}{10^4} + \frac{v_b}{2 \times 10^4}\right)$$

$$v_o = -10\left(v_i + \frac{v_b}{2}\right)$$

Definition 1

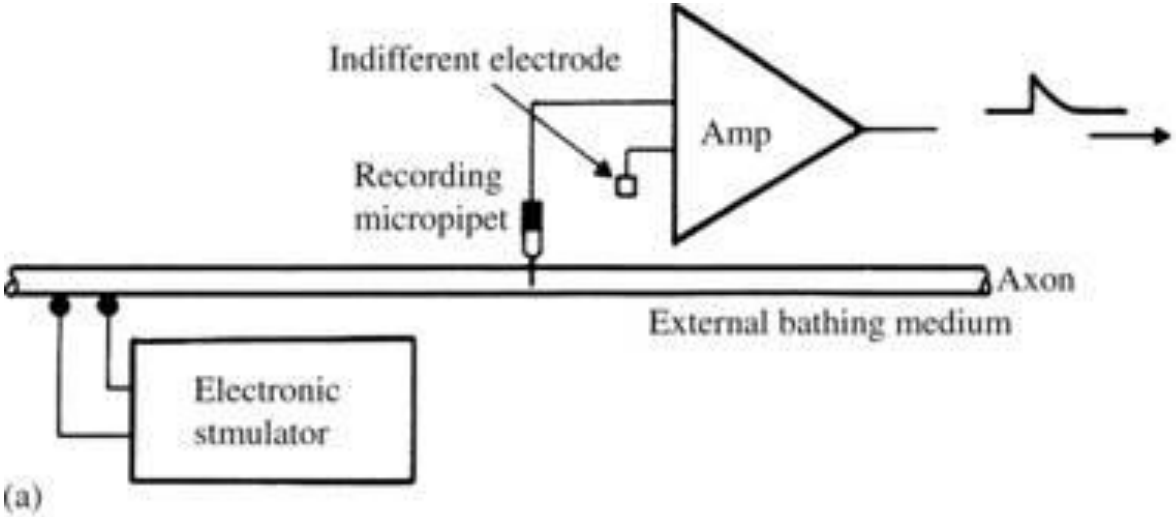

(a)

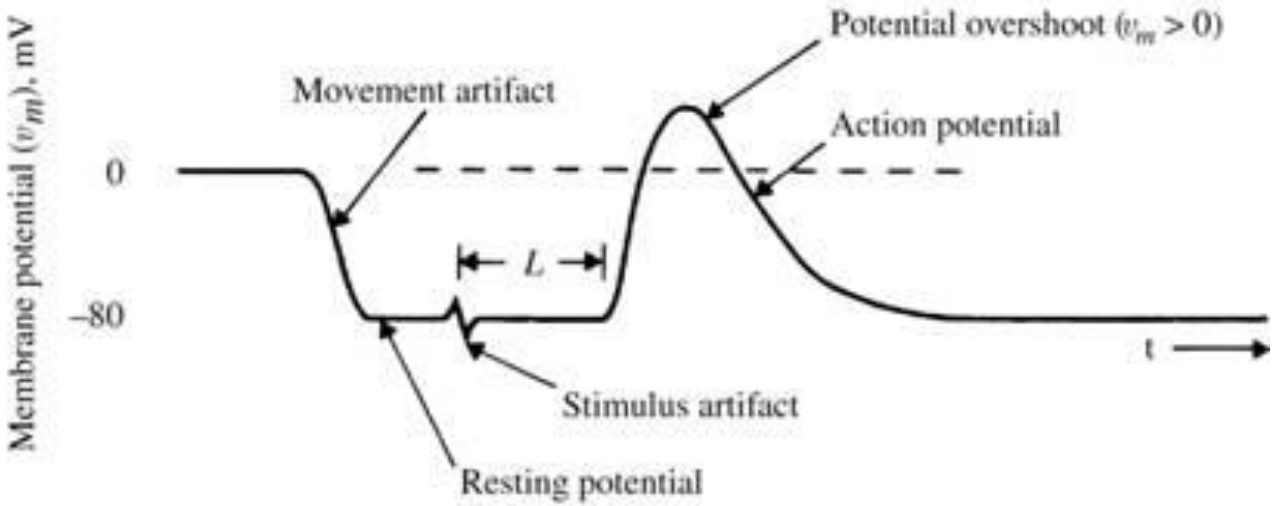

(b)

Definition 2

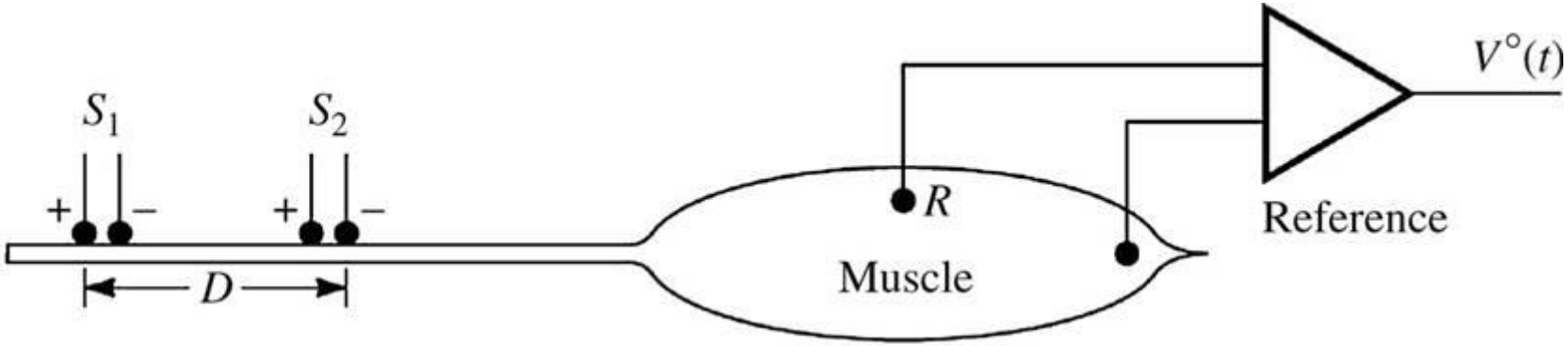

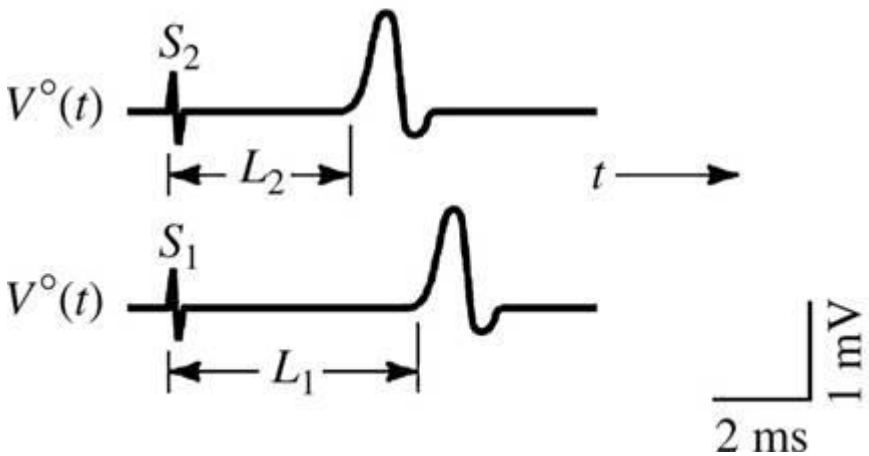

$$\text{Velocity} = u = \frac{D}{L_1 - L_2}$$

Optional EMG 1

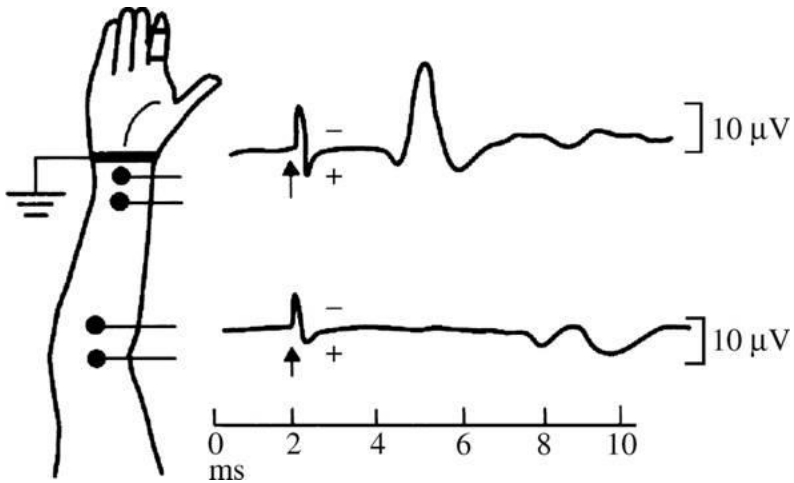

Sensory nerve action potentials evoked from median nerve of a healthy subject at elbow and wrist after stimulation of index finger with ring electrodes. The potential at the wrist is triphasic and of much larger magnitude than the delayed potential recorded at the elbow. Considering the median nerve to be of the same size and shape at the elbow as at the wrist, we find that the difference in magnitude and waveshape of the potentials is due to the size of the volume conductor at each location and the radial distance of the measurement point from the neural source. (From J. A. R. Lenman and A. E. Ritchie, *Clinical Electromyography,* 2nd ed., Philadelphia: Lippincott, 1977; reproduced by permission of the authors.)

Optional EMG 2

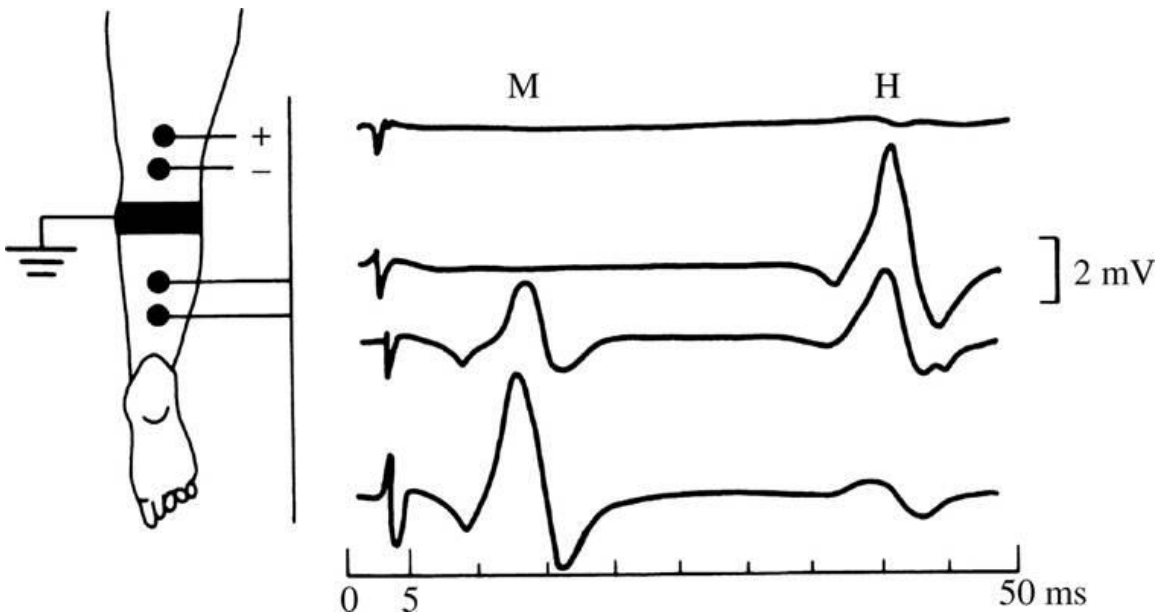

The H reflex The four traces show potentials evoked by stimulation of the medial popliteal nerve with pulses of increasing magnitude (the stimulus artifact increases with stimulus magnitude). The later potential or H wave is a low-threshold response, maximally evoked by a stimulus too weak to evoke the muscular response (M wave). As the M wave increases in magnitude, the H wave diminishes. (From J. A. R. Lenman and A. E. Ritchie, *Clinical Electromyography*, 2nd ed., Philadelphia: Lippincott, 1977; reproduced by permission of the authors.)

Filter 1

Vb=VinxR/(1/jCw+R)

Va=Vin-Vc=

Vin-(Vout-Vin)xRx/2Rx

2-Vout/

Va=Vb

(1+JRCw)]Vin=(3Vin

(1+jRCw)]x2=Vout/ → (1+jRCw)=Vout/

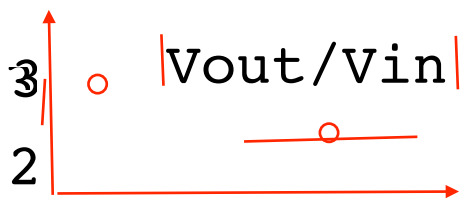

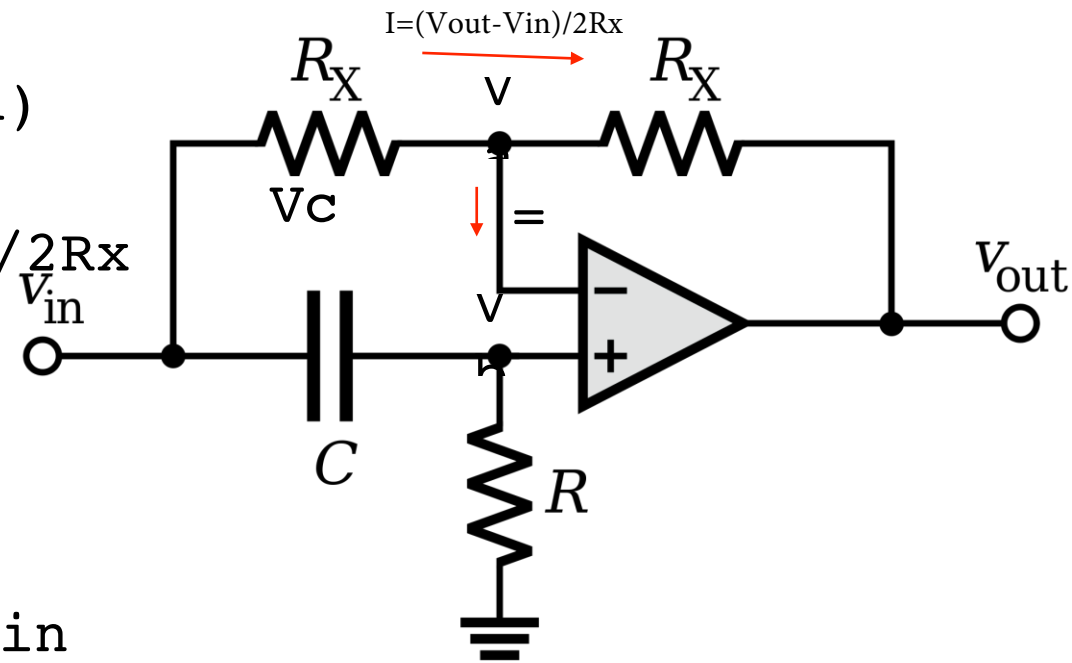

Filter 2

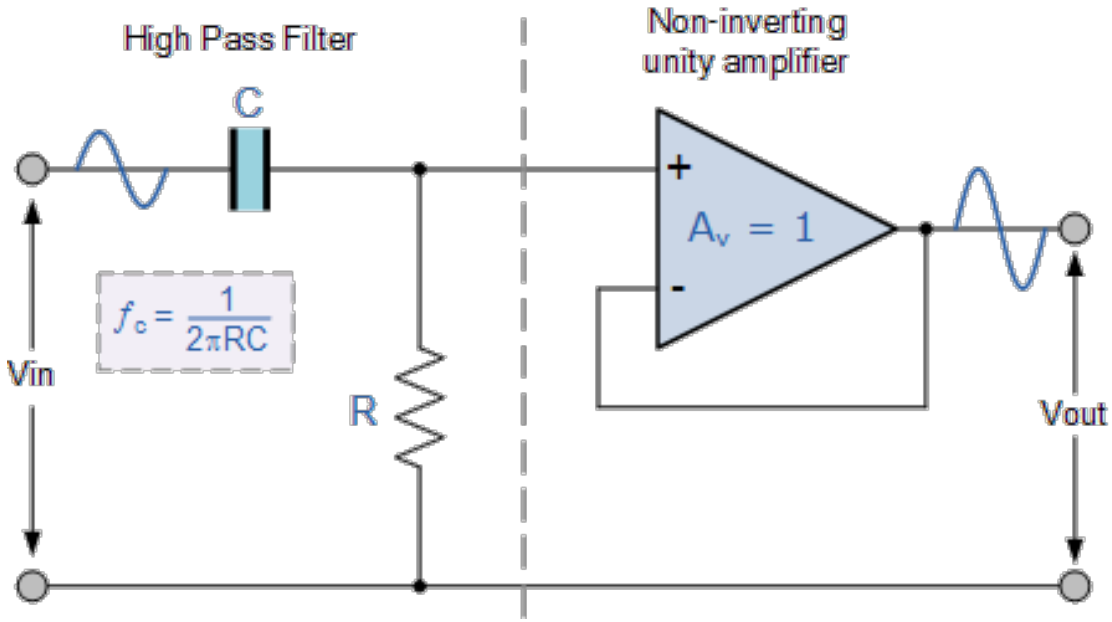

jRCw/(jRCw)=Vout/Vin

Filter 3

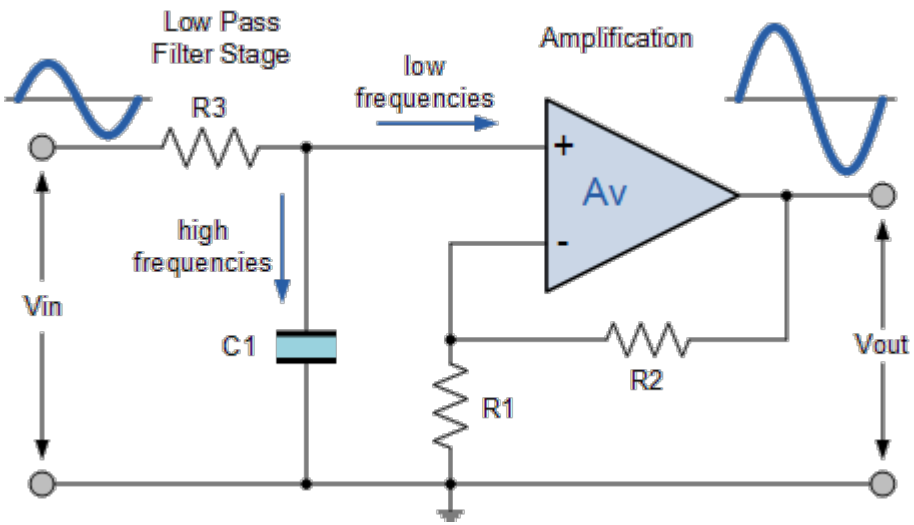

k=1+R2/R1

Vout/Vin=
k/(1+jRCw)

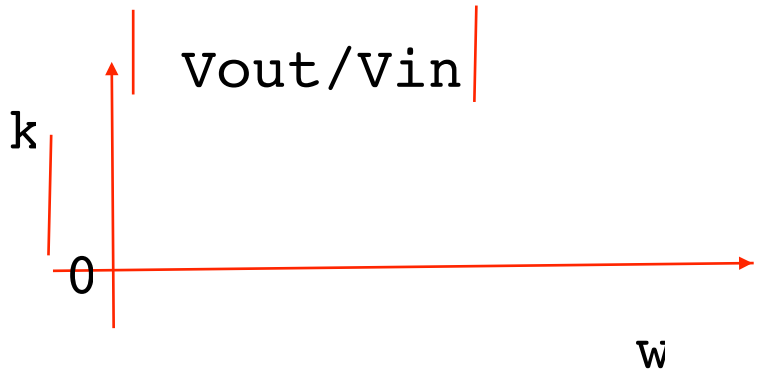

Brain Activities

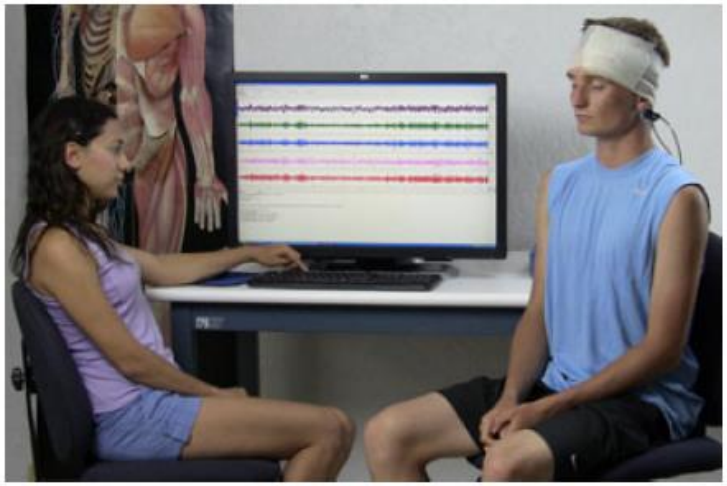

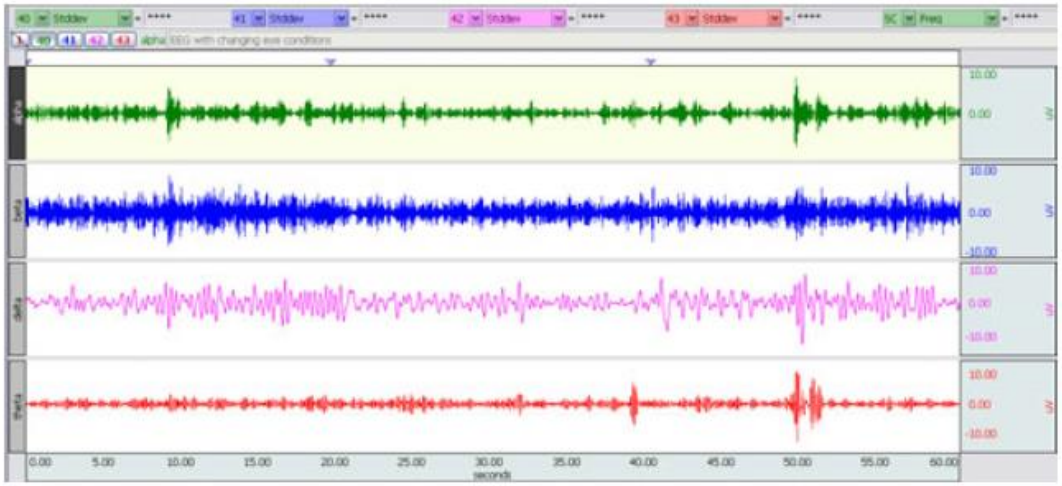

Motor Units

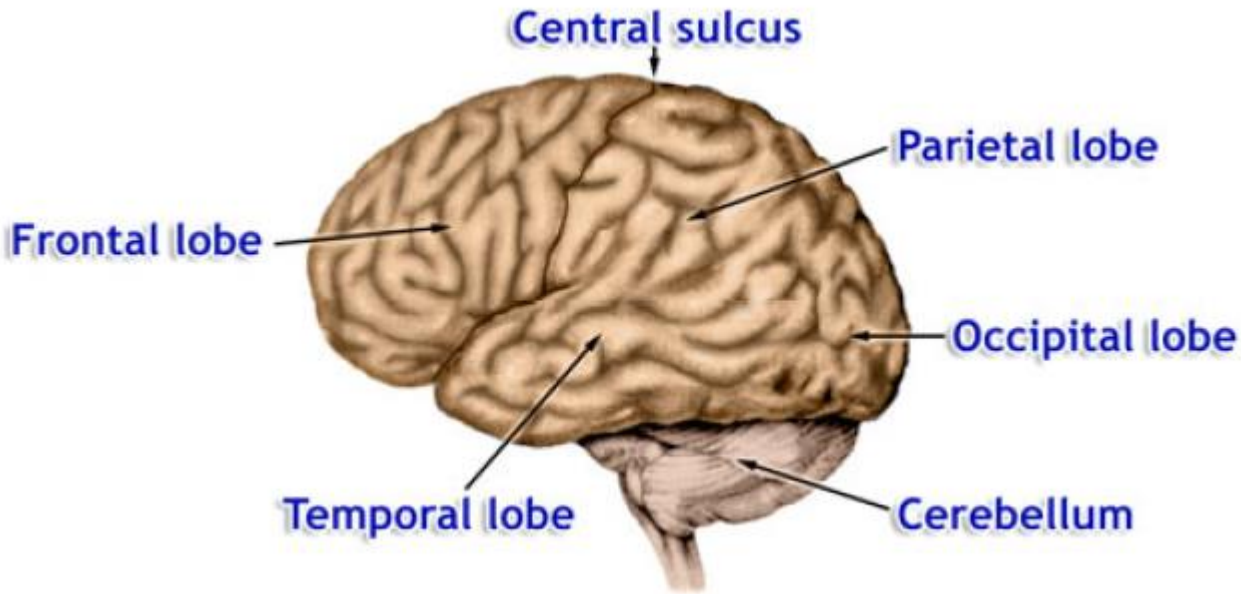

The **brain** is encased by the **cranium**, bones of the skull which immediately cover and protect brain surfaces. A thin cover of skin, called the **scalp**, covers most of the cranium. The largest part of the brain immediately beneath the bones of the cranium is the **cerebral cortex**. The cerebral cortex is composed of nerve cells (neurons,) many of which are functionally connected to each other, and connected to other parts of the brain. Electrical activity in the form of nerve impulses being sent and received to and from cortical neurons is always present, even during sleep. In a biological sense (as well as a medical or legal sense,) absence of electrical activity in the human cerebral cortex signifies death.

Functions of the cerebral cortex include abstract thought, reasoning, voluntary and involuntary control of skeletal muscle, and the recognition and differentiation of somatic, visceral, and special sensory stimuli. Specific regions of the cerebral cortex process or generate various kinds of information. For example, the **occipital lobe** processes visual information while the **parietal lobe** processes somatosensory information such as cutaneous pain or temperature

EEG

In 1929, an Austrian physician named Hans Berger discovered that electrodes placed on the scalp could detect various patterns of electrical activity. After verifying that the recordings were indeed recording from the brain, and were not artifacts of muscle or scalp, scientists began to study these “brain waves.” Today, the EEG is still a medically useful recording for brain function. In medical and basic research, the correlation of particular brain waves with sleep phases, emotional states, psychological profiles, and types of mental activities is ongoing.

An EEG electrode will mainly detect the activity in the brain region just under it. Nevertheless, the electrodes receive the activity from thousands of neurons. In fact, one square millimeter of cortex has more than 100,000 neurons. Since each region of the cerebral cortex of an alert person is busy receiving, integrating, and sending many impulses, this activity is detected in the EEG. (For more information about waveforms,

Definitions and Concepts

Typical Frequencies of Synchronized Brainwaves

Rhythm	Typical Frequencies (Hz)
alpha	8-13
beta	13-30
delta	1-5
theta	4-8

Definitions and Concepts

Alpha

The four basic rhythms have been associated with various states. In general, the alpha rhythm is the prominent EEG wave pattern of an adult who is awake but relaxed with eyes closed. Each region of the brain has a characteristic alpha rhythm but alpha waves of the greatest amplitude are recorded from the occipital and parietal regions of the cerebral cortex. Results from various studies indicate that:

- females tend to have higher mean frequencies of alpha waves than males
- alpha wave amplitudes are likely to be higher in "outgoing" subjects *Outgoing= Confident*
- alpha wave amplitudes vary with a subject's attention to mental tasks performed with the eyes closed

In general, amplitudes of alpha waves diminish when subjects open their eyes and are attentive to external stimuli although some subjects trained in relaxation techniques can maintain high alpha amplitudes even with their eyes open.

Beta

Beta rhythms occur in individuals who are alert and attentive to external stimuli or exert specific mental effort, or paradoxically, beta rhythms also occur during deep sleep, REM (Rapid Eye Movement) sleep when the eyes switch back and forth. Notice that the amplitude of beta rhythms tends to be lower than for alpha rhythms. This does not mean that there is less electrical activity, rather which the "positive" and "negative" activities are starting to counterbalance so that the sum of the electrical activity is less. Thus, instead of getting the wave-like synchronized pattern of alpha waves, **desynchronization** or **alpha block** occurs. So, the beta wave represents arousal of the cortex to a higher state of alertness or tension. It may also be associated with "remembering" or retrieving memories.

Definitions and Concepts

Delta and Theta

Delta and theta rhythms are low-frequency EEG patterns that increase during sleep in the normal adult. As people move from lighter to deeper stages of sleep (prior to REM sleep,) the occurrence of alpha waves diminishes and is gradually replaced by the lower frequency theta and then delta rhythms.

Although delta and theta rhythms are generally most prominent during sleep, there are cases when delta and theta rhythms are recorded from individuals who are awake. For example, theta waves will occur for brief intervals during emotional responses to frustrating events or situations. Delta waves may increase during difficult mental activities requiring concentration. In general, the occurrence and amplitudes of delta and theta rhythms are highly variable within and between individuals.

Electrode positions

Electrode positions have been named according to the brain region below that area of the scalp: **frontal**, **central** (sulcus,) **parietal**, **temporal**, and **occipital**. In the **bipolar method**, the EEG is measured from a pair of scalp electrodes. The pair of electrodes measures the difference in electrical potential (voltage) between their two positions above the brain. A third electrode is attached behind the ear as a point of reference, 'ground', of the body's baseline voltage due to other electrical activities within the body.

In today's lesson, you will record an EEG using the bipolar method.

Summary

- Filter
- EEG Definitions

Thank You

EECS4641: Medical Devices

Lecture #6: Sensors and Amplifiers and EEG

Ebrahim Ghafar-Zadeh
Department of Electrical Engineering and Computer Science
Lessoned School of Engineering
York University

Jan. 22th, 2016

YORK UNIVERSITÉ UNIVERSITY

Op-amp Interfaces

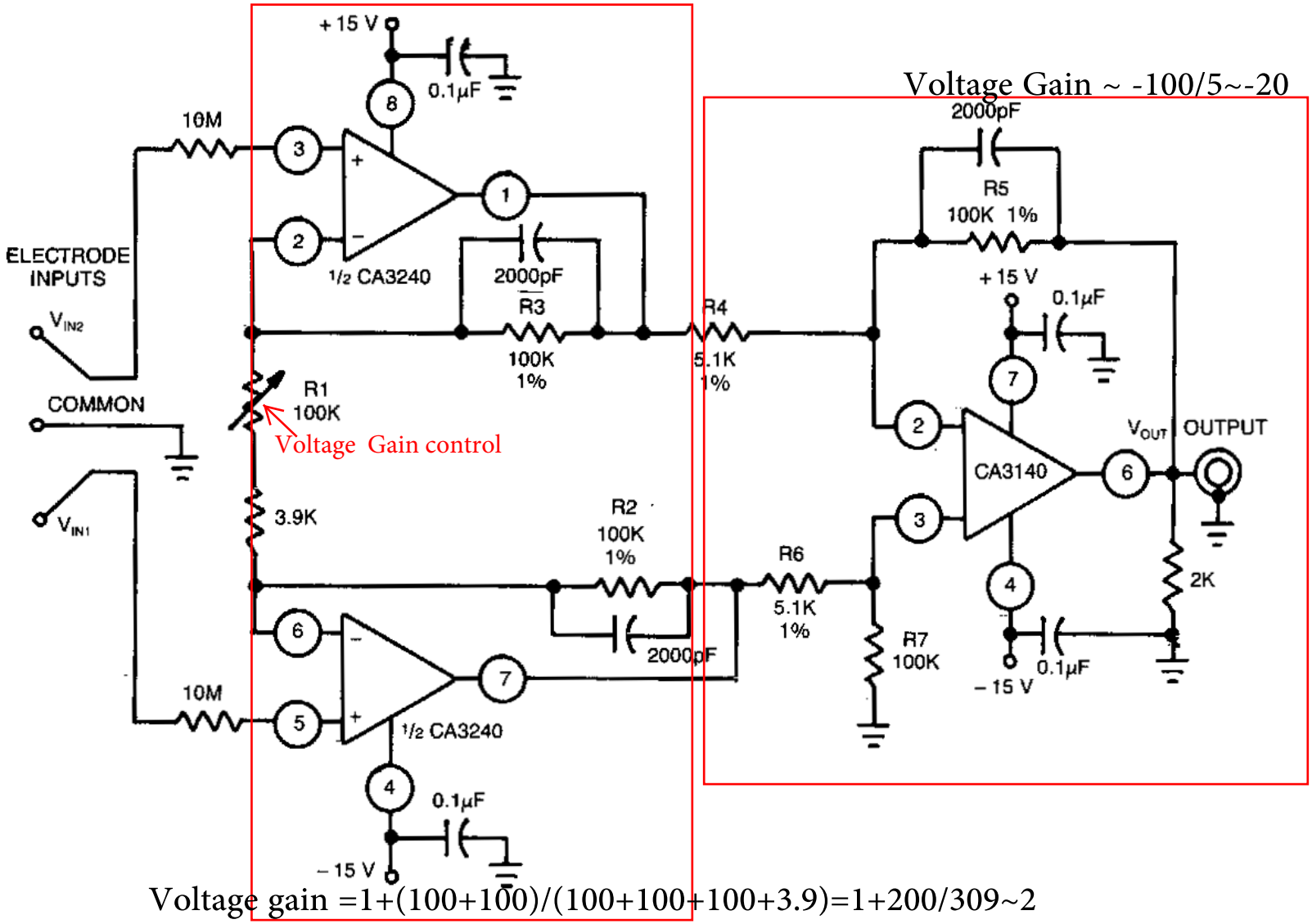

Total Gain= -40

Voltage gain =1+(100+100)/(100+100+100+3.9)=1+200/309~2

Definition 1

Audio Medical Devices

Audio System

If it is modeled as a variable capacitor, then calculate the AC signal generated in the output due to the variation of this microphone capacitor

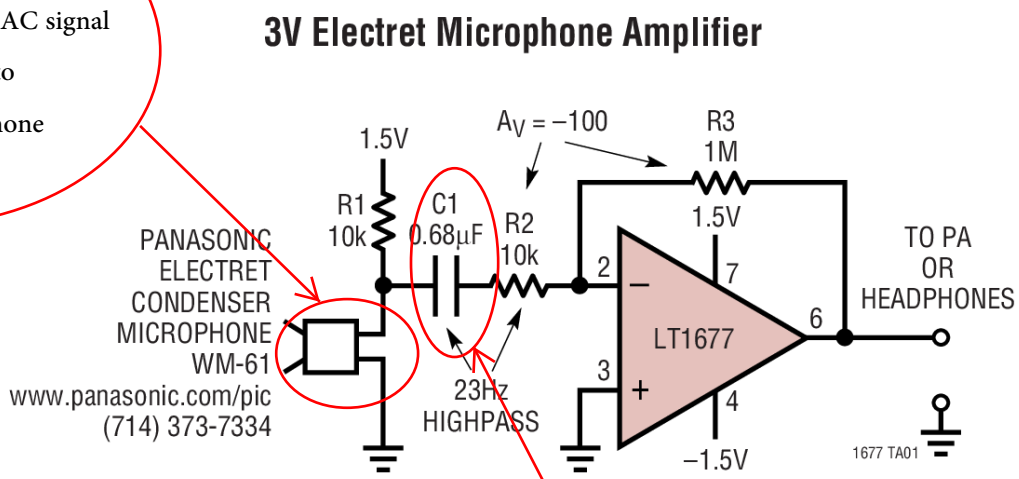

AC pass capacitor , Impedance =0

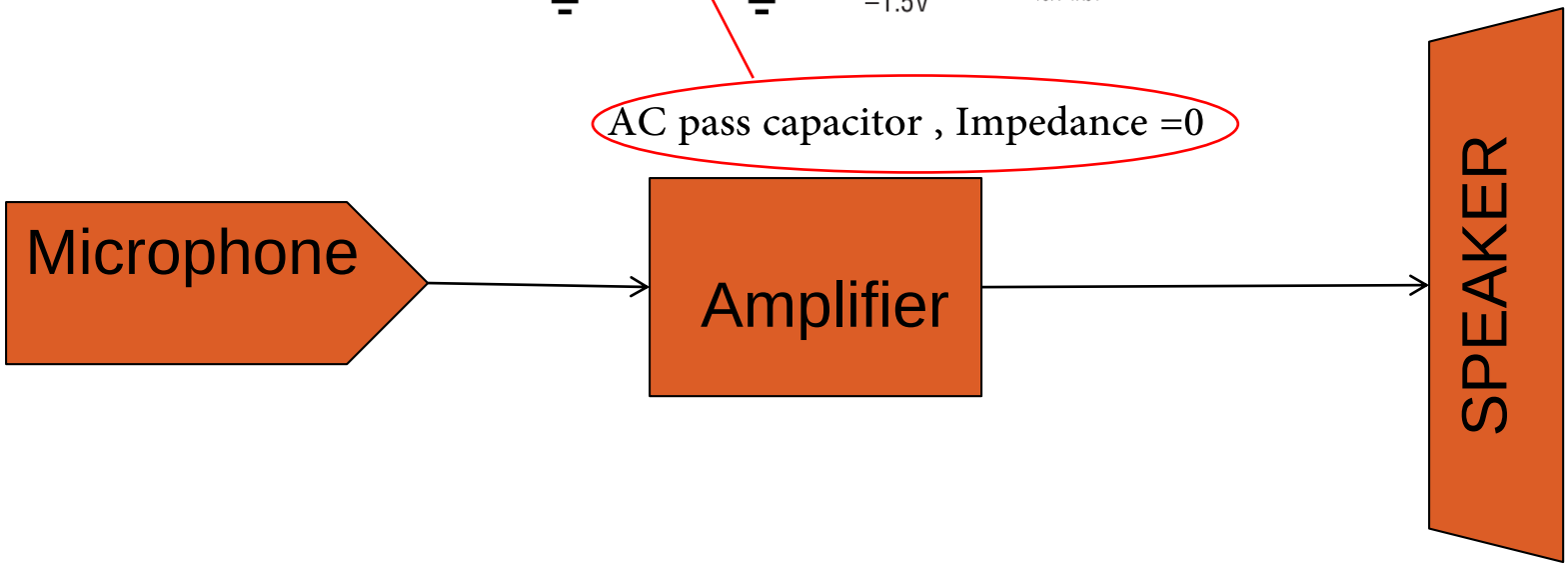

Speaker

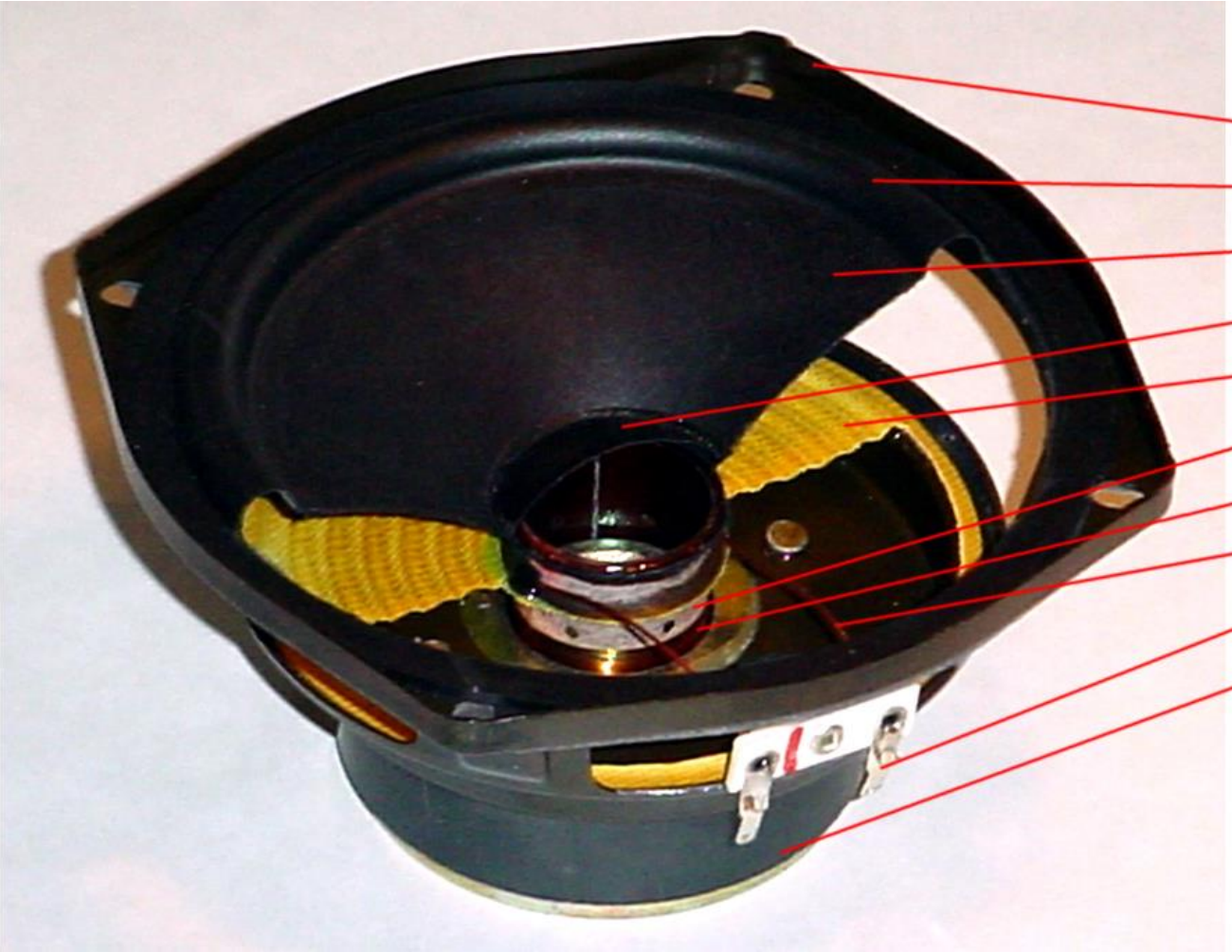
Basket
Surround
Diaphragm
Dustcap
Spider
Former
Voice Coil
Wire Leads
Terminals
Magnet

Speaker

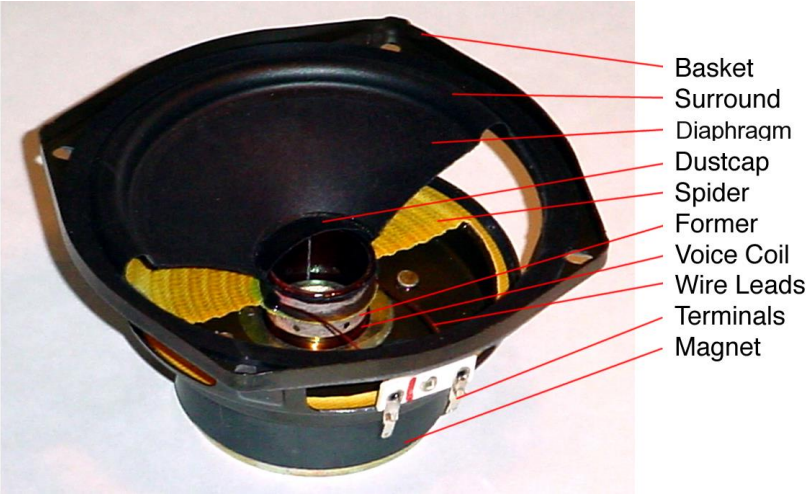
Basket
Surround
Diaphragm
Dustcap
Spider
Former
Voice Coil
Wire Leads
Terminals
Magnet

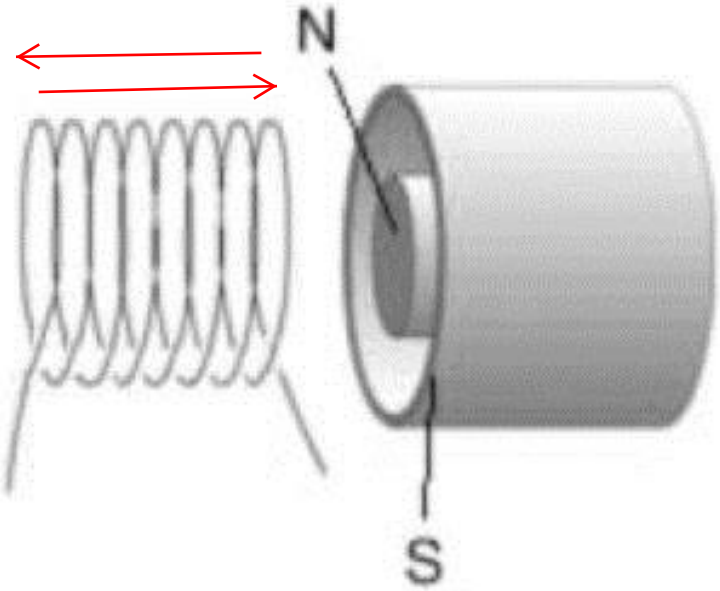
N
S

Speaker

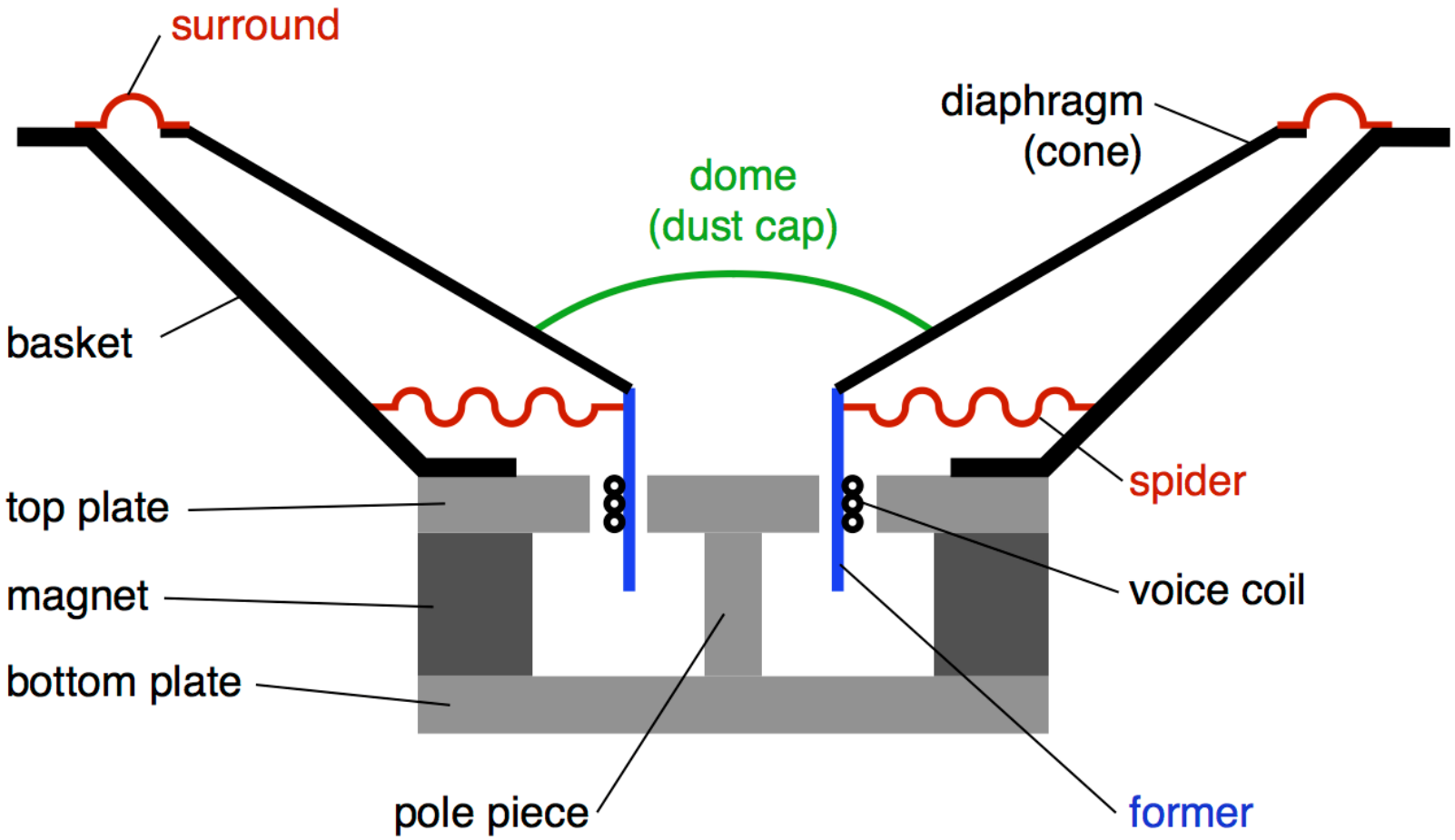
surround
diaphragm
(cone)
dome
(dust cap)
basket
spider
top plate
voice coil
magnet
bottom plate
pole piece
former

Speaker

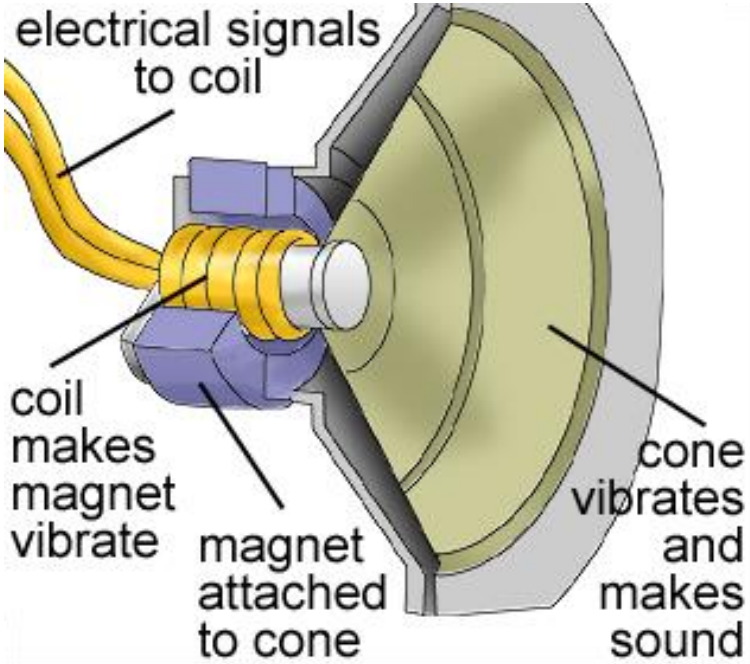
electrical signals
to coil
coil
makes
magnet
vibrate
magnet
attached
to cone
cone
vibrates
and
makes
sound

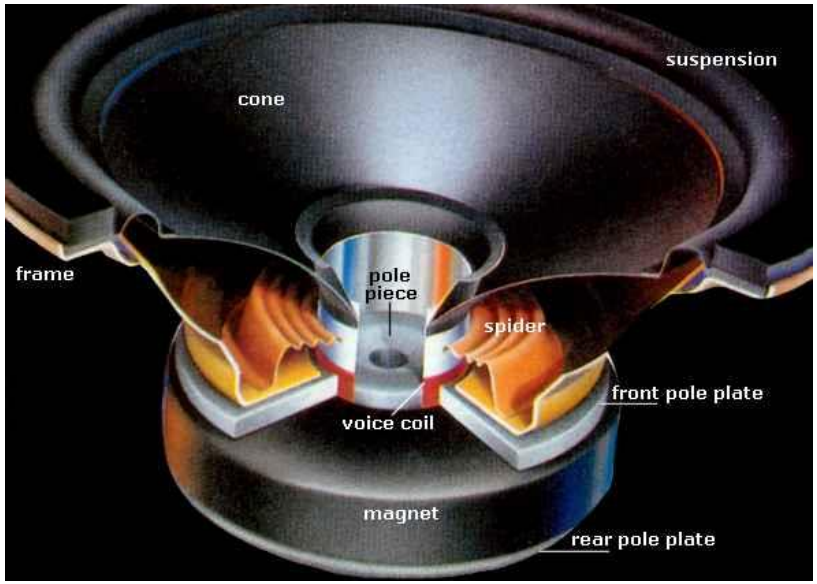
suspension
cone
frame
pole
piece
spider
front pole plate
voice coil
magnet
rear pole plate

Microphone (dynamic)

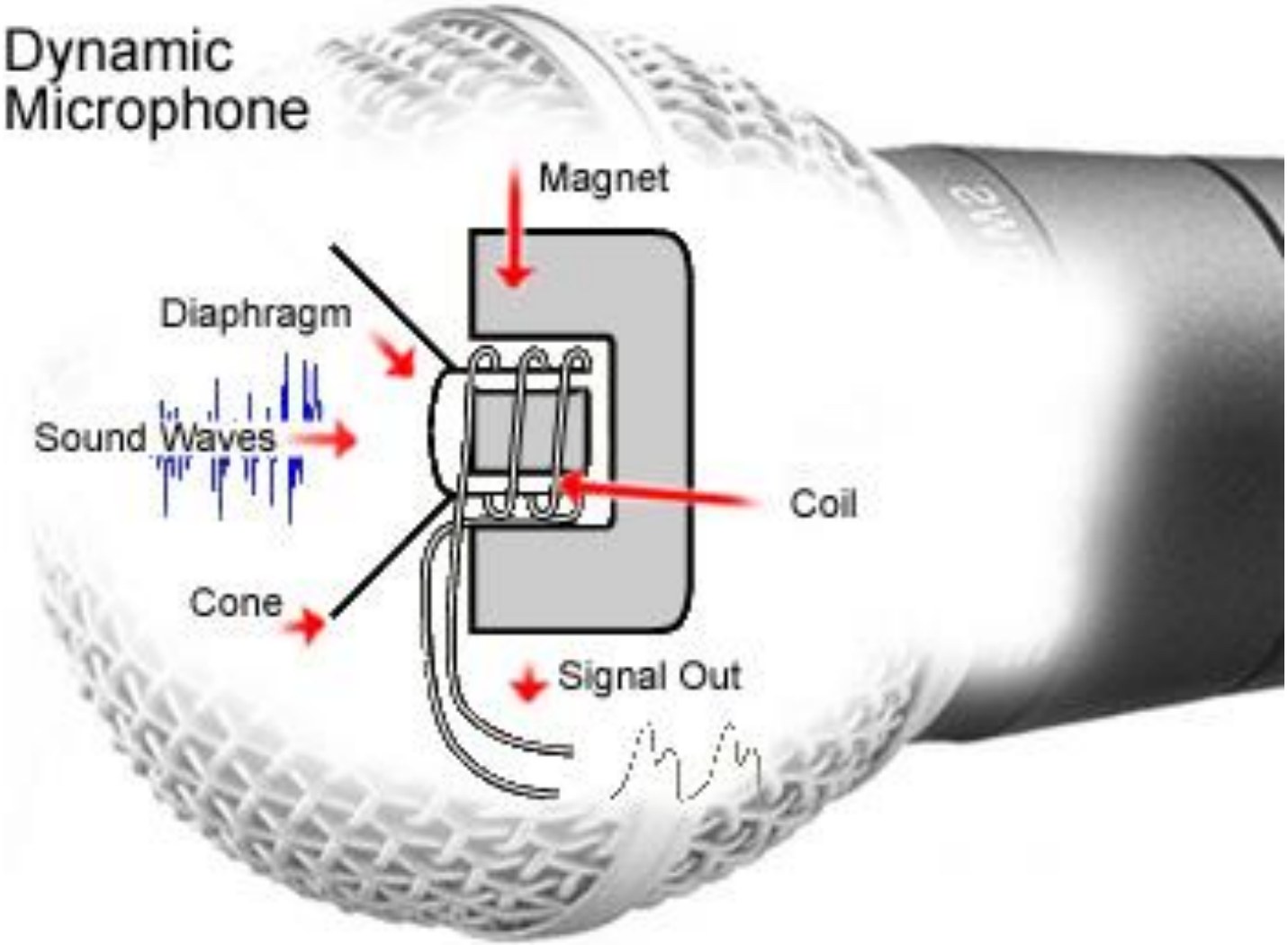

Microphone

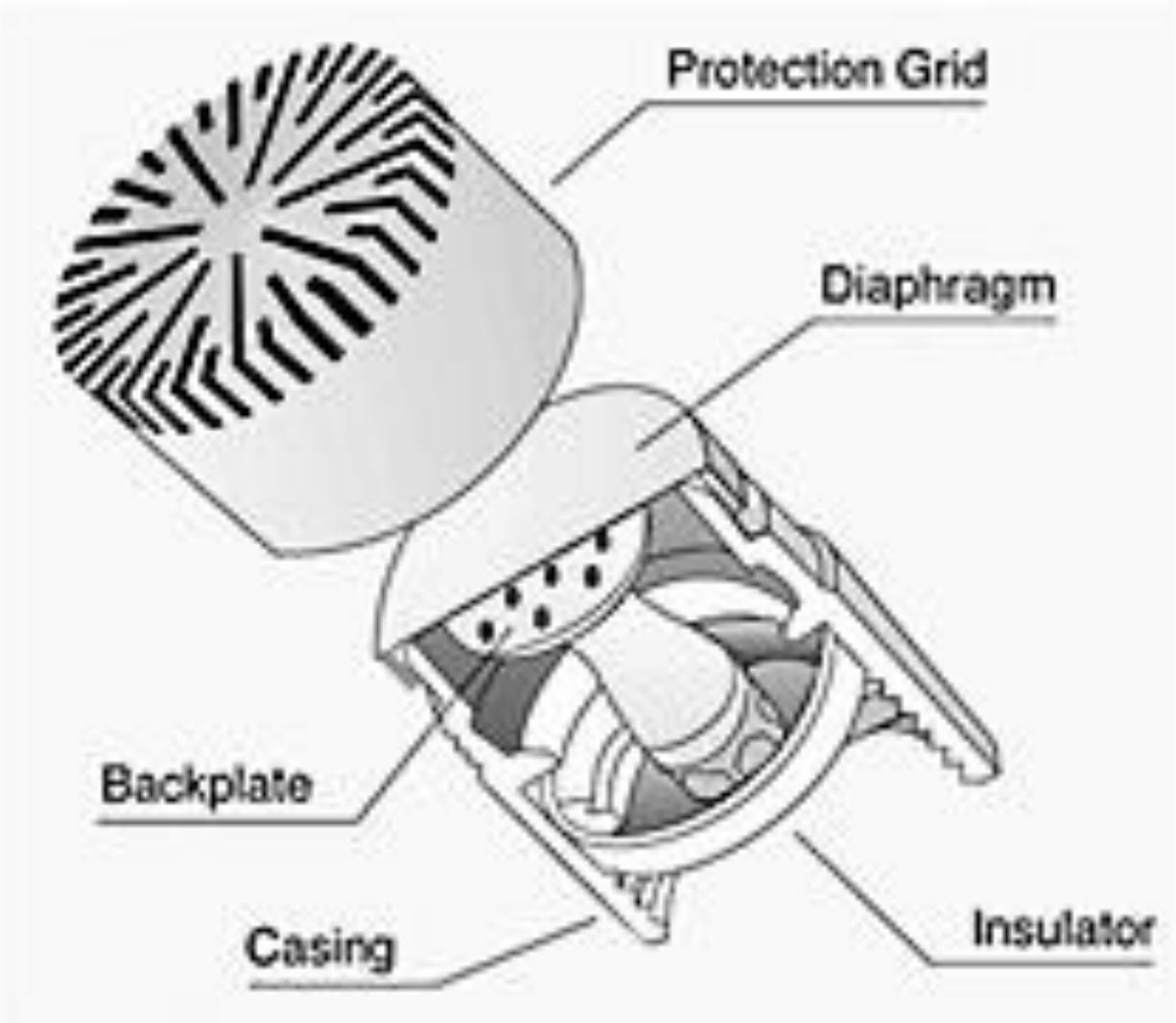

Microphone

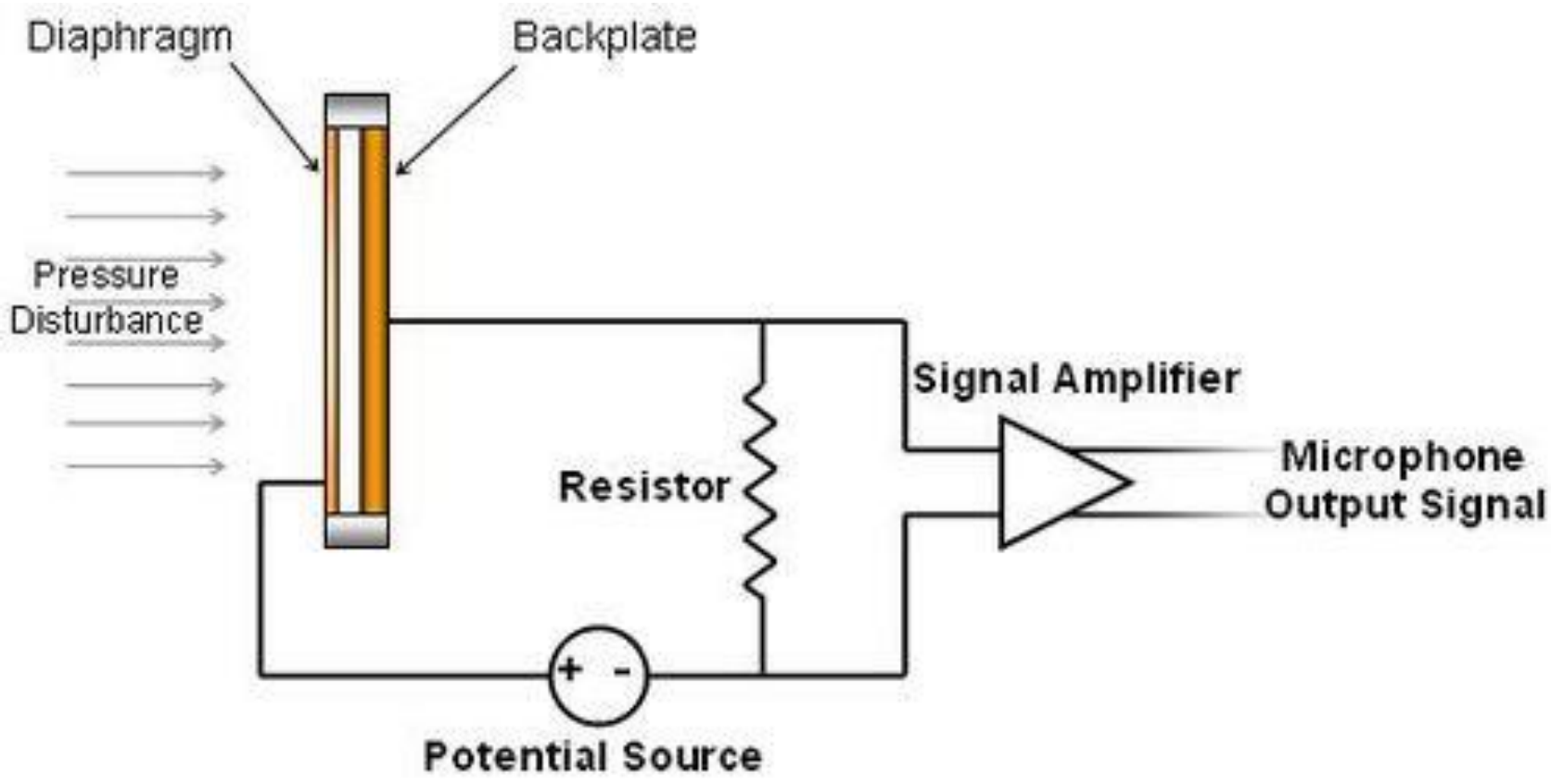
Diaphragm
Backplate
Pressure
Disturbance
Signal Amplifier
Resistor
Microphone
Output Signal
+ -
Potential Source

Microphone (Electrect)

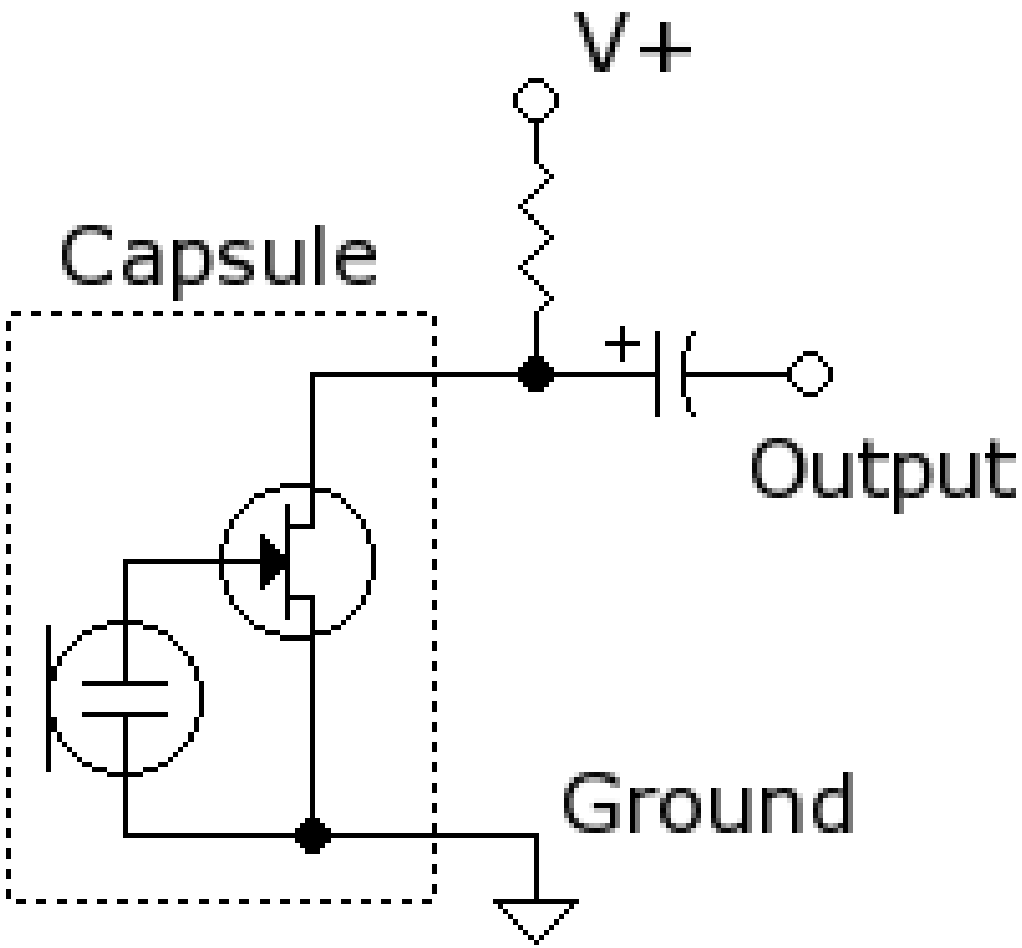

Audio System

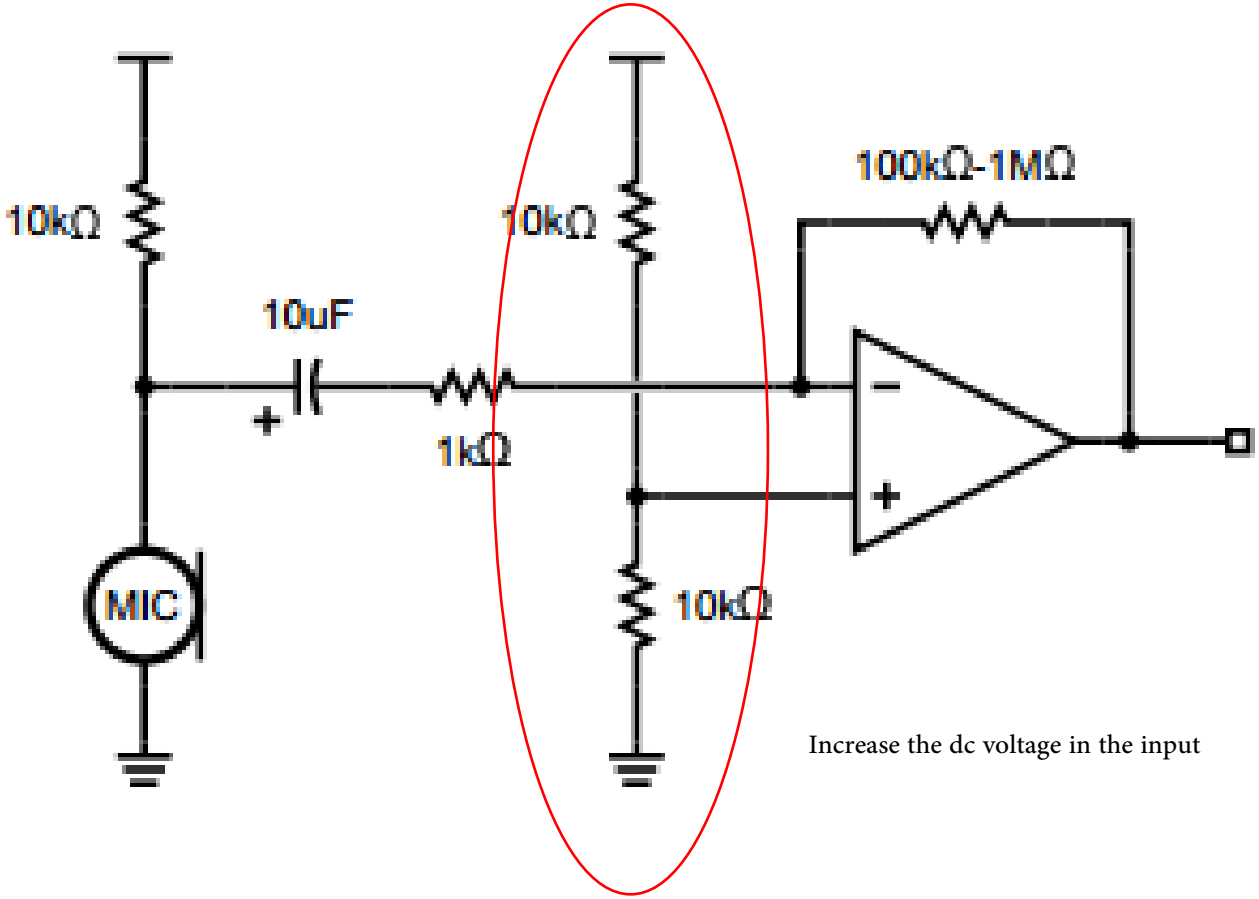

Audio System

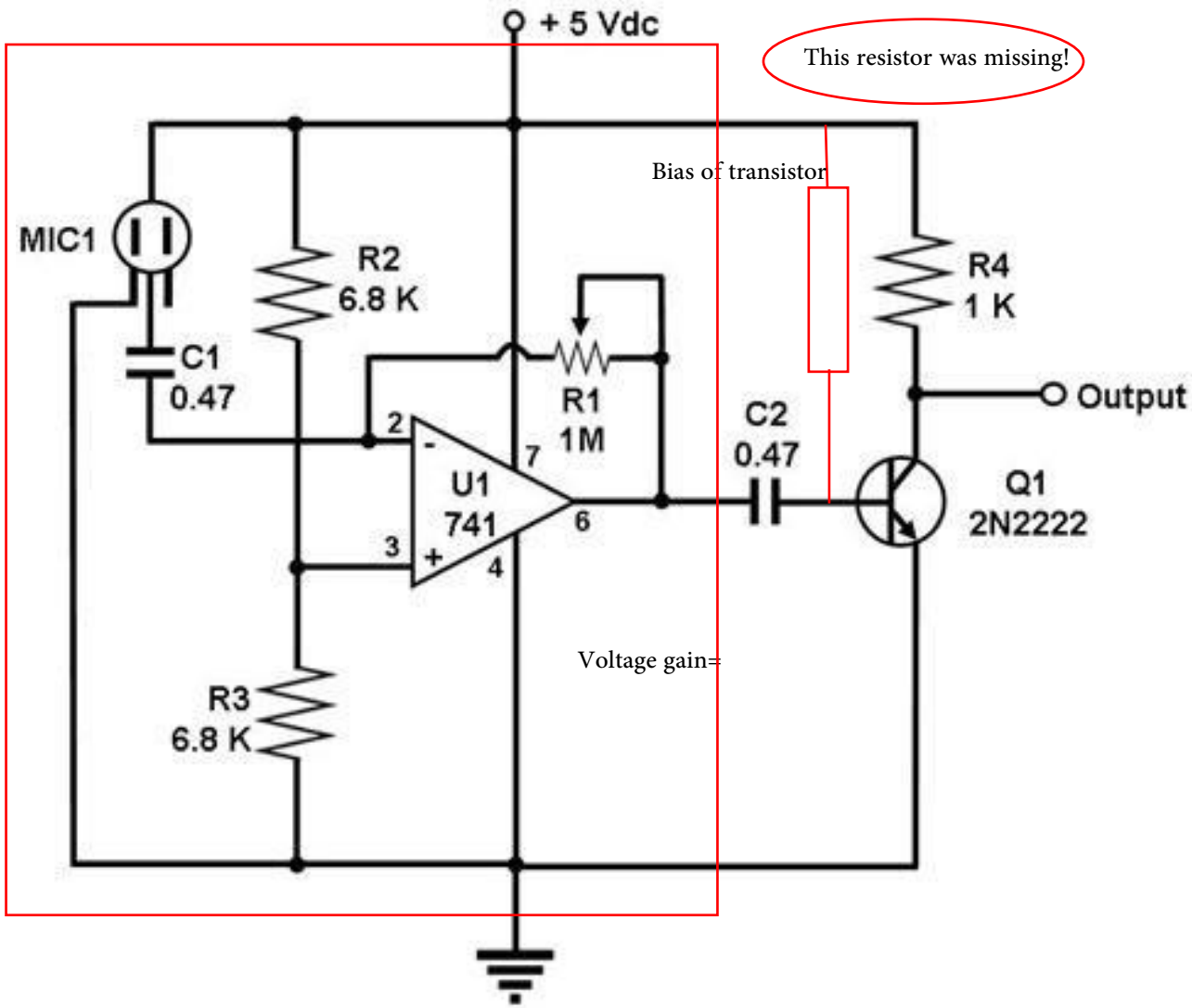

Voltage Gian=jCwR1

Magnitude of Gian= CwR1

Phase =90

Is not suitable as amplifier!

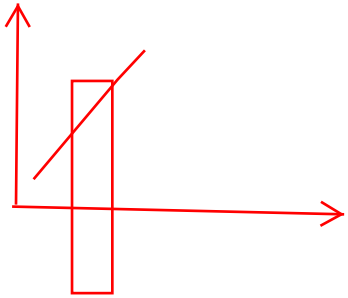

Brain Activities

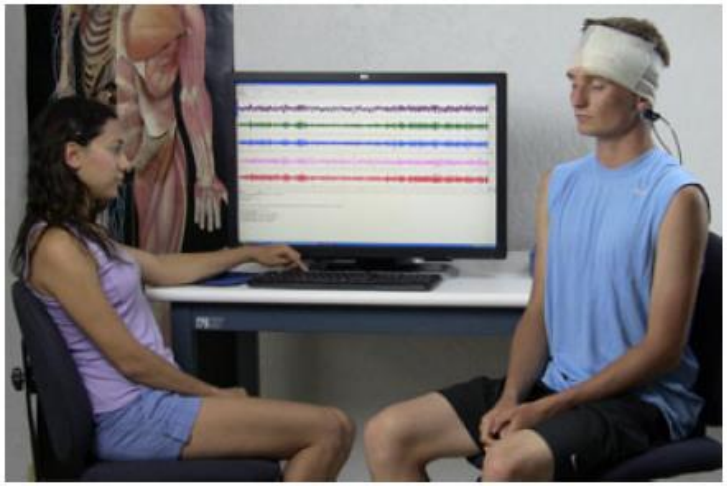

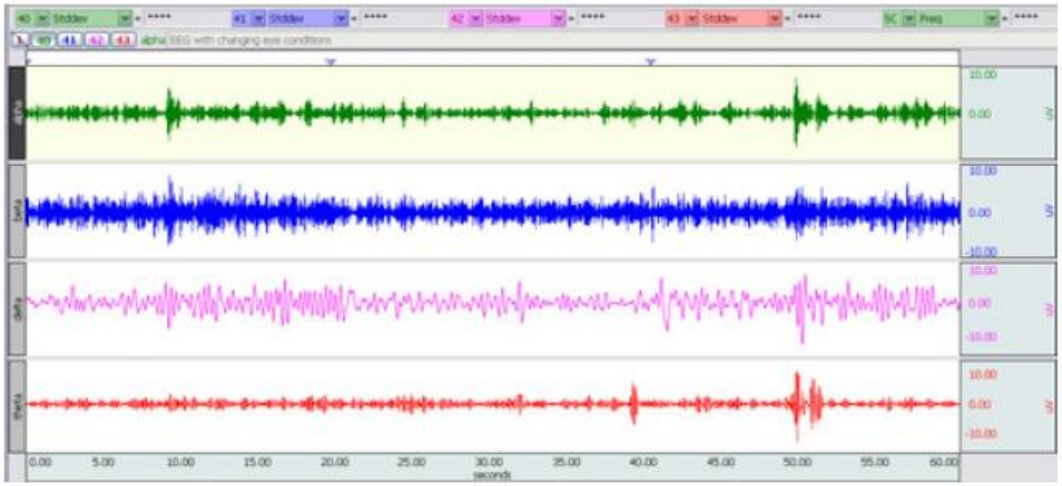

BBB

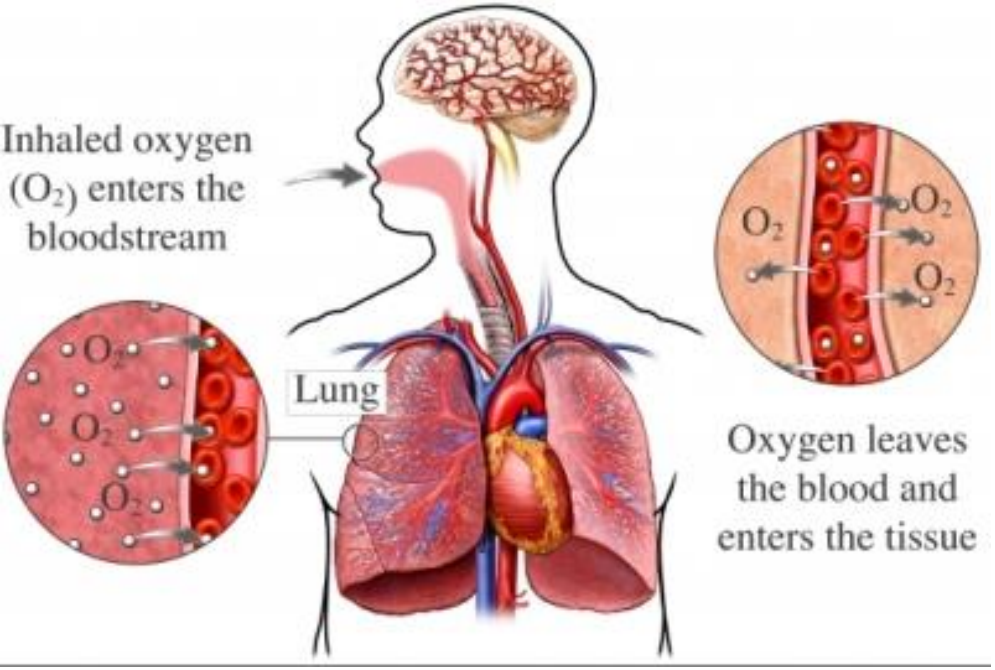
Inhaled oxygen (O_2) enters the bloodstream
Lung
Oxygen leaves the blood and enters the tissue

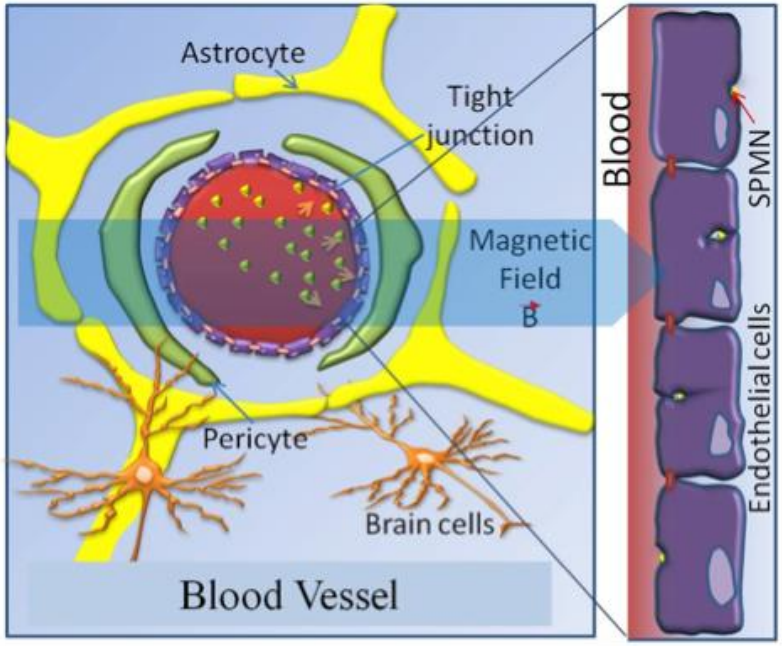
Astrocyte
Tight junction
Magnetic Field
B
Pericyte
Brain cells
Blood Vessel
Blood
SPMN
Endothelial cells

Hyperventilation

Hyperventilation (breathing abnormally quickly and deeply) causes the gas composition of the blood to change. During hyperventilation, the carbon dioxide levels of the blood fall, pH levels increase, and blood pressure decreases. These effects of hyperventilation are associated with changes in brainwave activity. With hyperventilation, the overall electrical activity of the brain increases, with the amplitude of the alpha rhythms often increasing as well.

- Frequency may affect the speed of "remembering" during memory tests and may be approximately 1 Hz higher for high-scoring subjects than subjects who scored lower.
- Amplitudes tend to be higher in subjects who are more "outgoing" and extroverted.
- Amplitudes vary with the difficulty of mental tasks performed with the eyes closed.
- Amplitudes of alpha waves diminish when subjects open their eyes and are attentive to external stimuli. Thus, instead of getting the wave-like synchronized pattern of alpha waves, **desynchronization** occurs.
- Amplitudes increase when subjects are less alert and tend to be higher from 1:30-4:30 pm.

In this lesson, you will record the EEG and alpha rhythm under several conditions. At the same time, the root-mean-squared of the alpha rhythm (**alpha-RMS**) and an "alpha thermometer" will be displayed. Alpha-RMS and the "alpha thermometer" are indices of the activity levels of the alpha rhythm. Alpha RMS is the root mean square value of the signal within a window length of 0.25 seconds. This parameter provides a good characterization for the actual quantity of the alpha waves.

Summary

- Audio Medical Devices
- Audio amplifier
- EEG and BBB

Thank You

EECS 4641: Medical Devices

Lecture #7: ECG (1)

Prof. Ebrahim Ghafar-Zadeh
Department of Electrical Engineering and Computer Science
Faculty of Science and Engineering
York University

Jan. 25th, 2016

Blood Ciculation

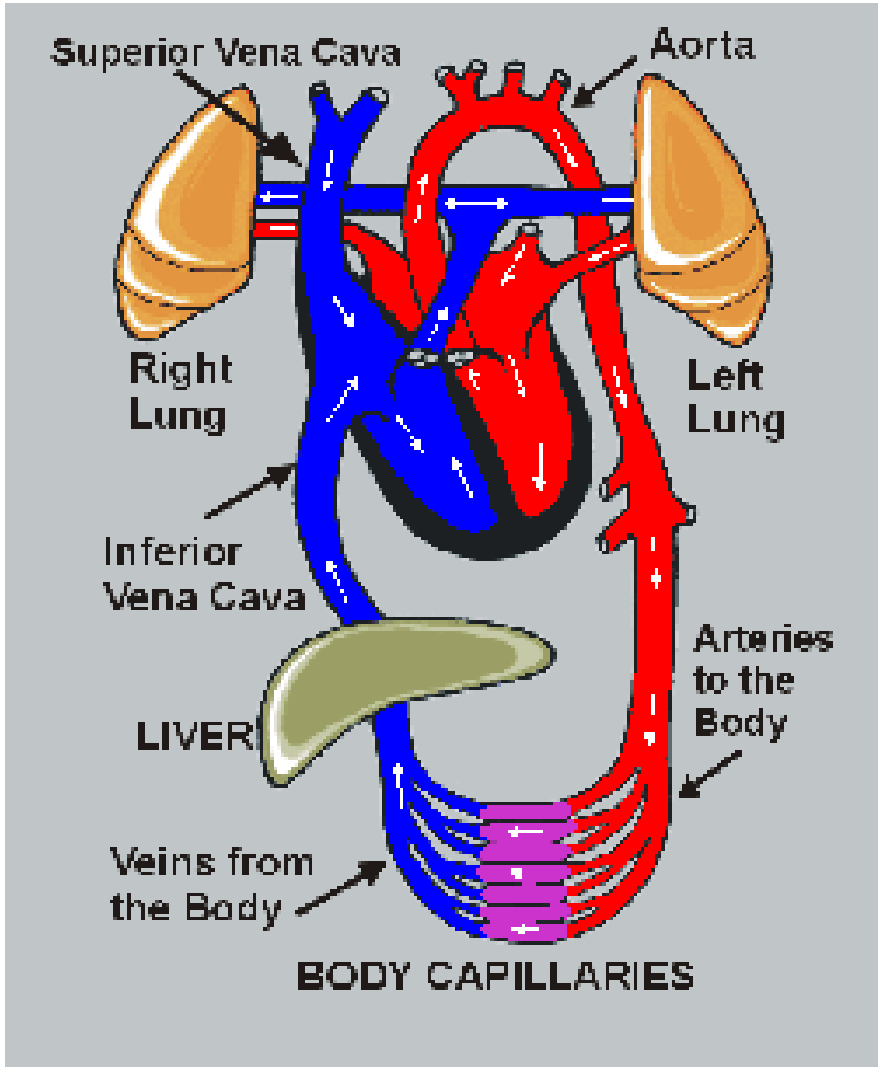

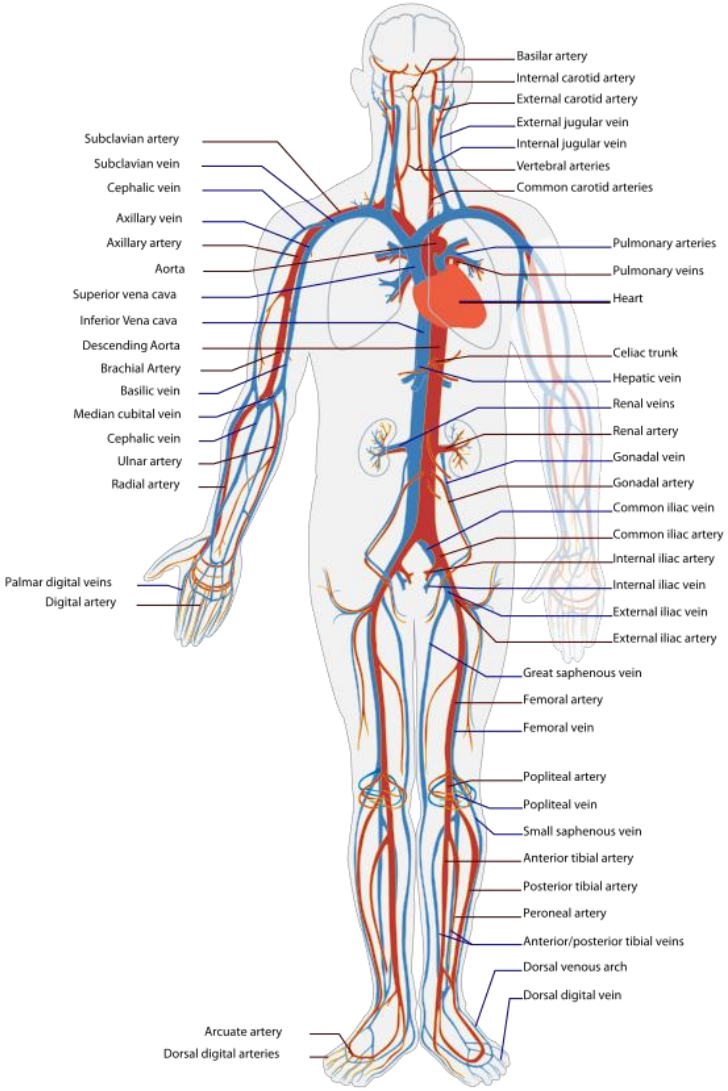

Heart Function (Pumping)

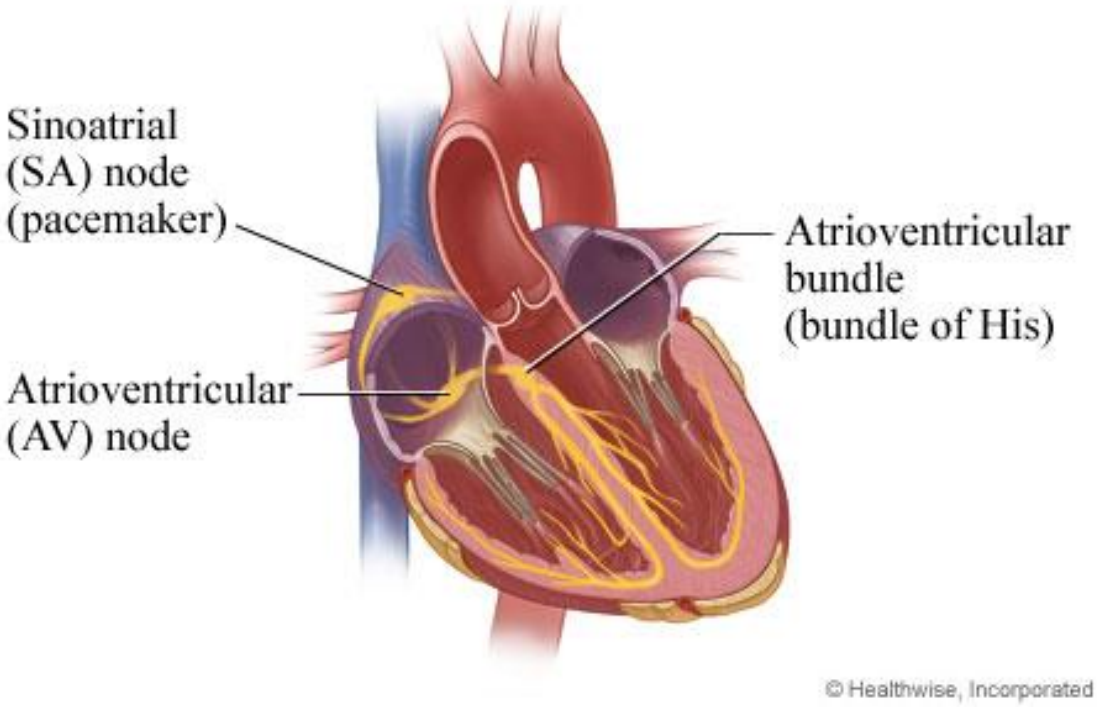

Heart Function (Pumping)

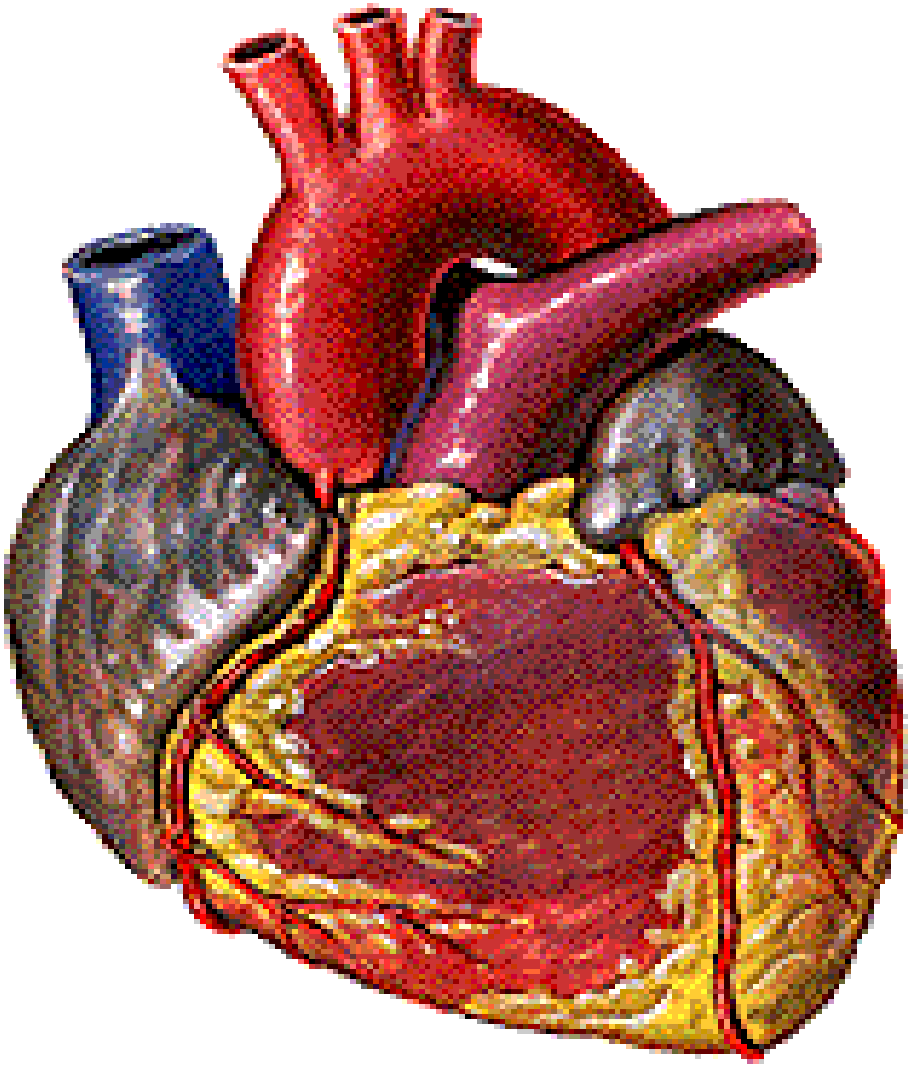

Heart Function

Charge distribution

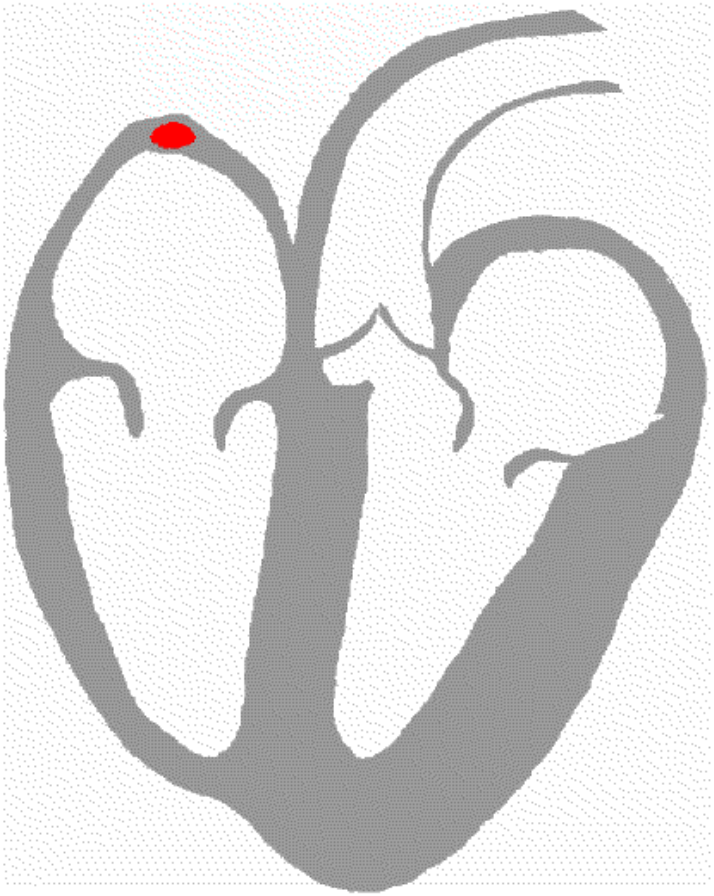

–

Heart Function

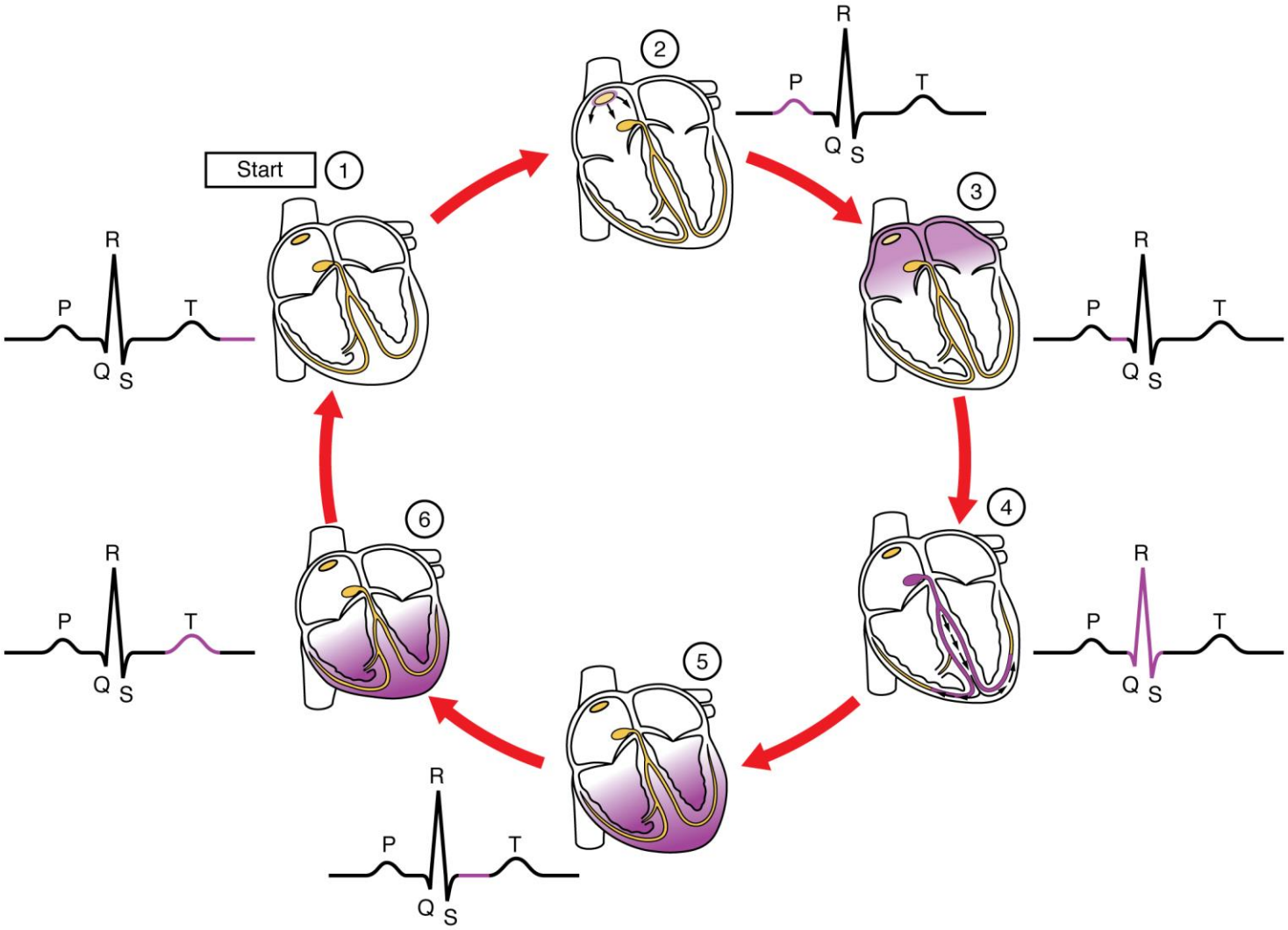

Dipole Field of Heart

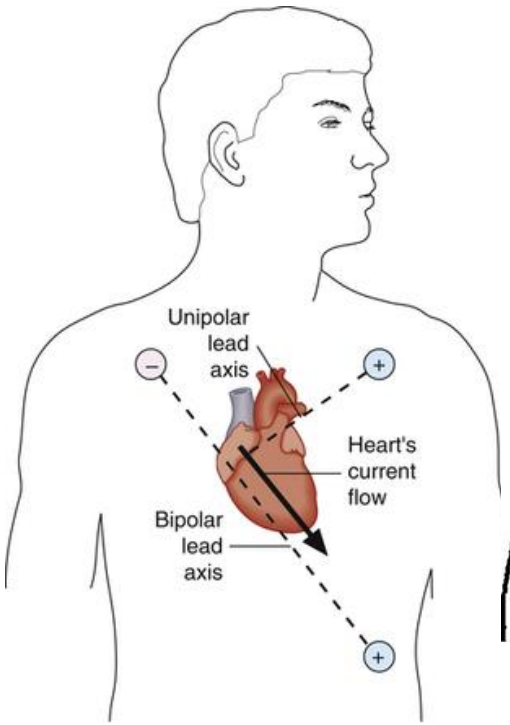

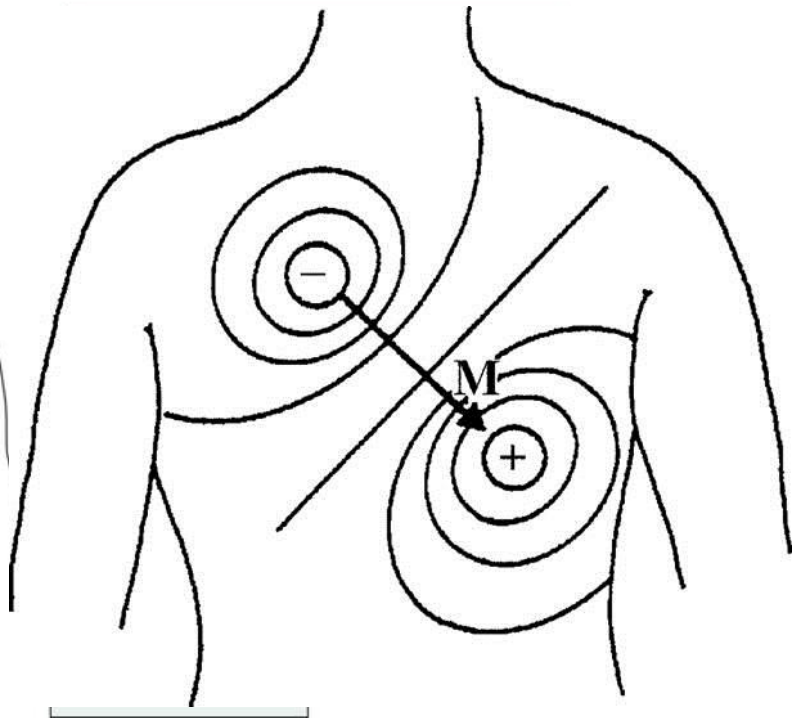

Rough sketch of the dipole field of the heart when the R wave is maximal. The dipole consists of the points of equal positive and negative charge separated from one another and denoted by the dipole moment vector M.

Dipole field Model (Wilson and 3-lead)

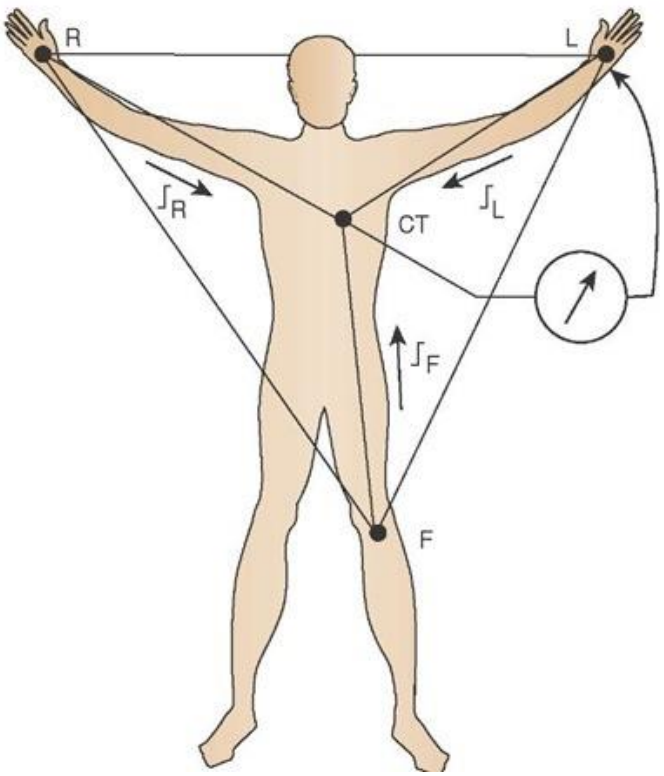

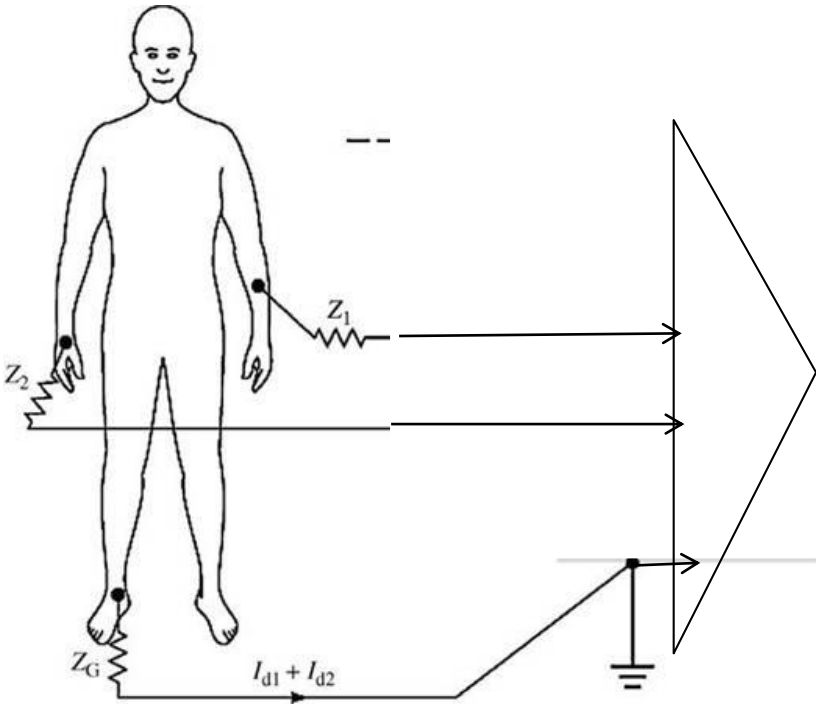

EEG

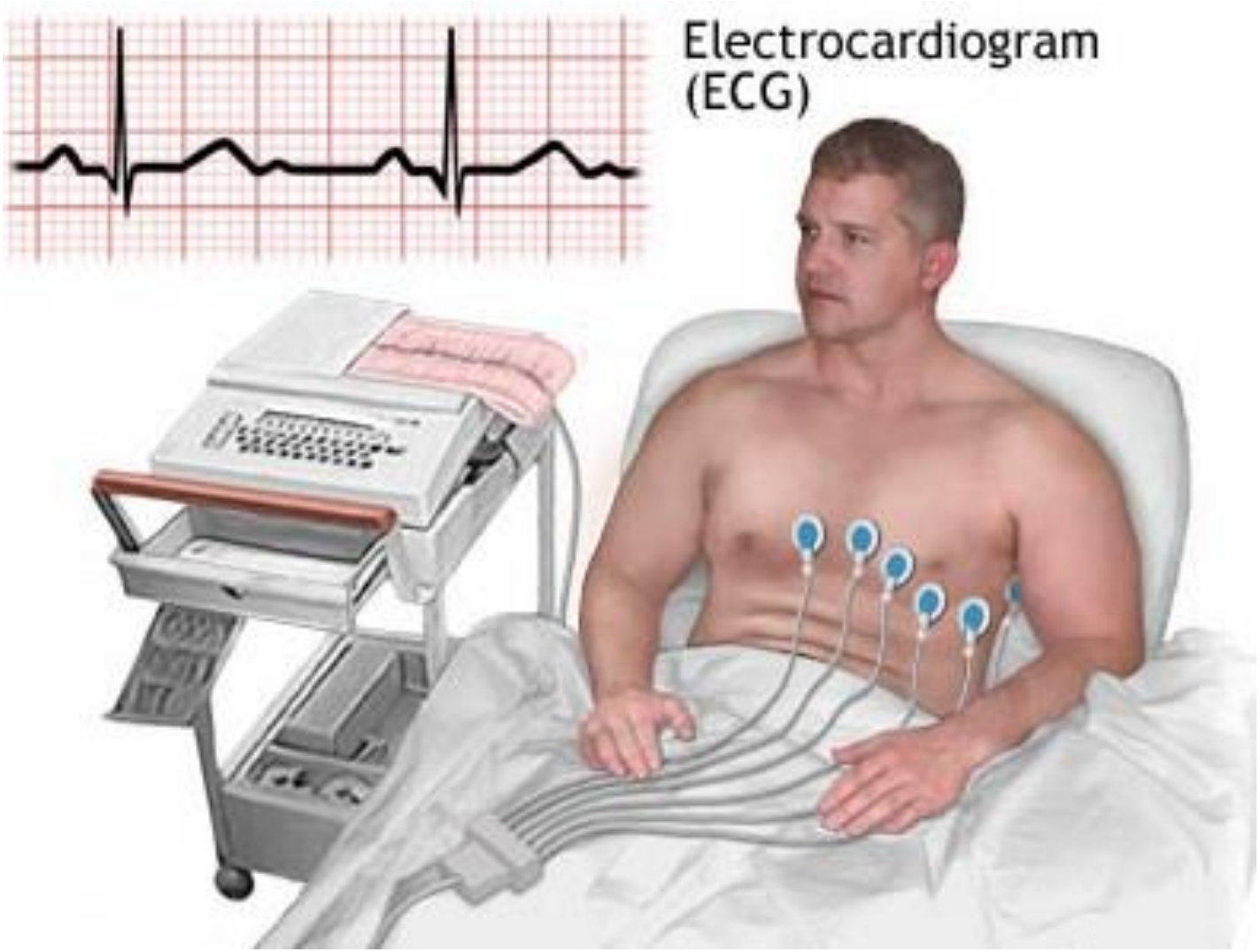

EEG

Connect to your laptop or PC via the serial, USB or card slot

DRE - Call: 1.800.462.8195 - Visit: www.dremed.com

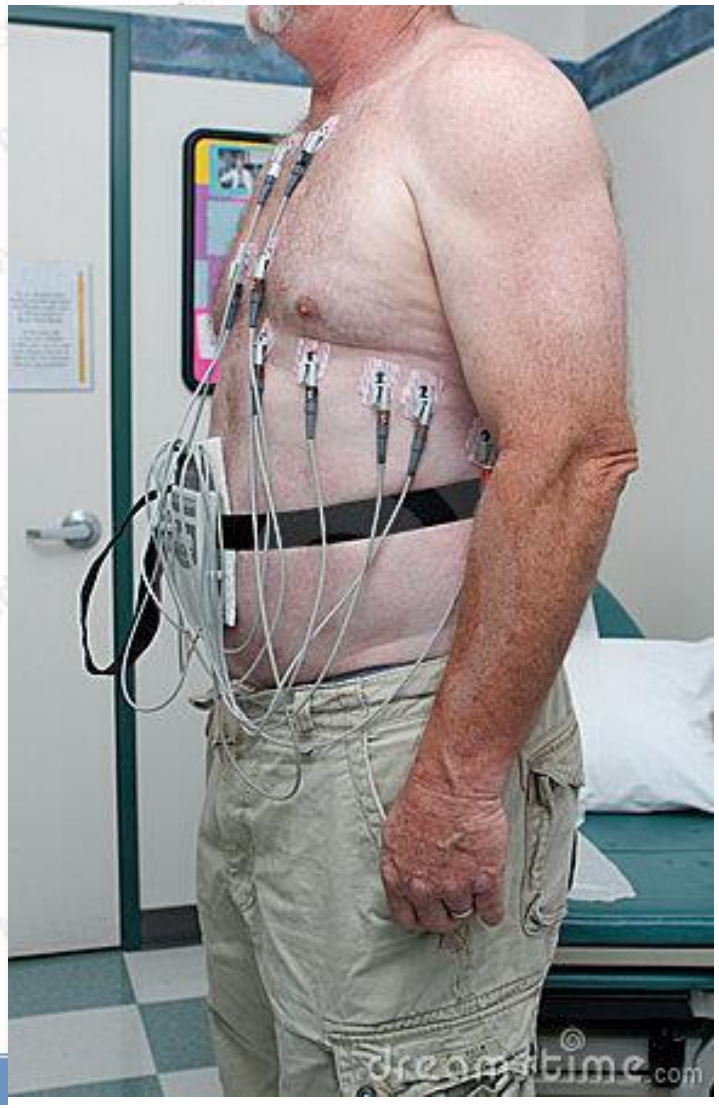

EEG

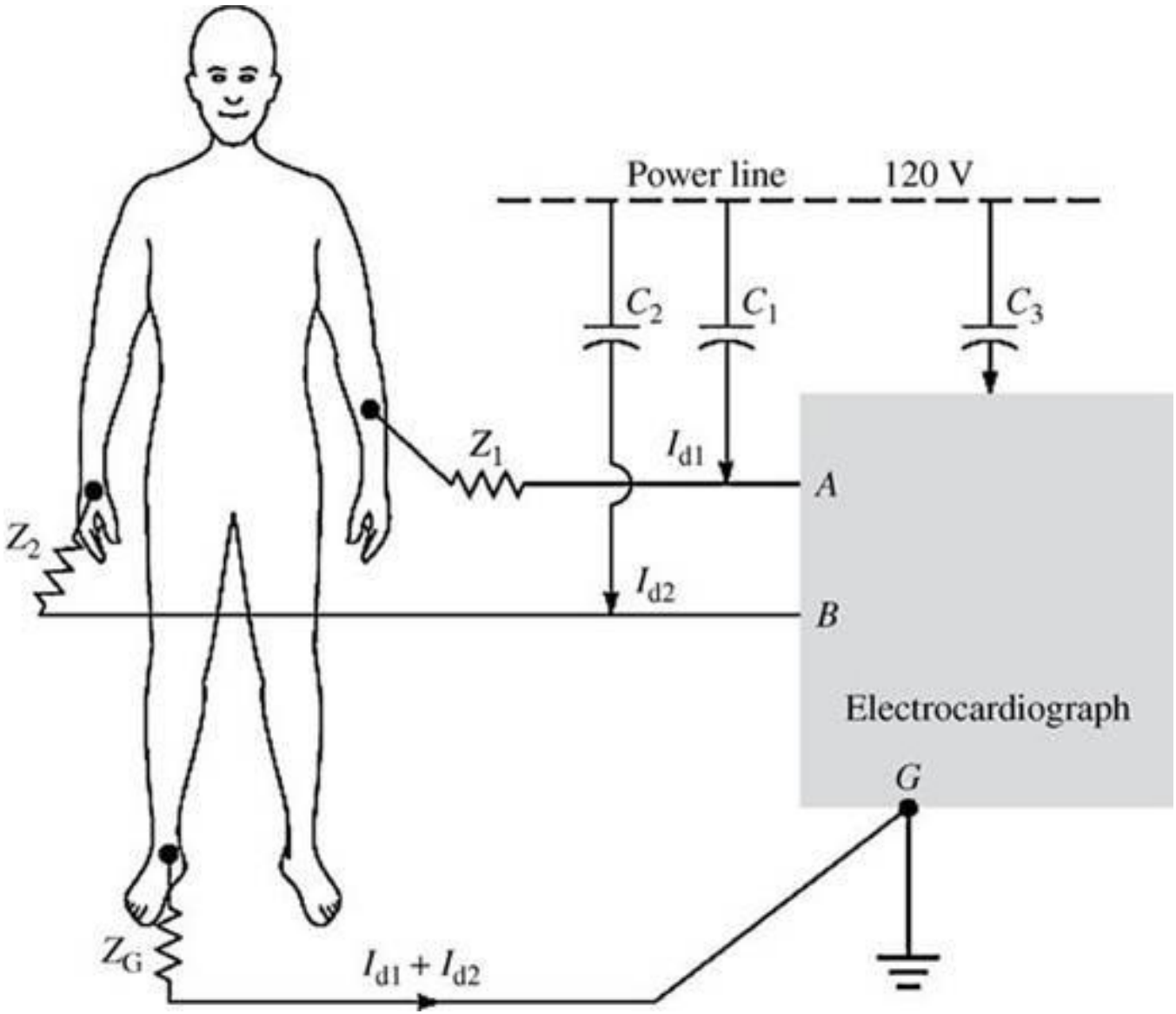
Power line
120 V
C_2
C_1
C_3
Z_1
I_{d1}
A
Z_2
I_{d2}
B
Electrocardiograph
G
Z_G
$I_{d1} + I_{d2}$

EEG (Differential Amplifier)

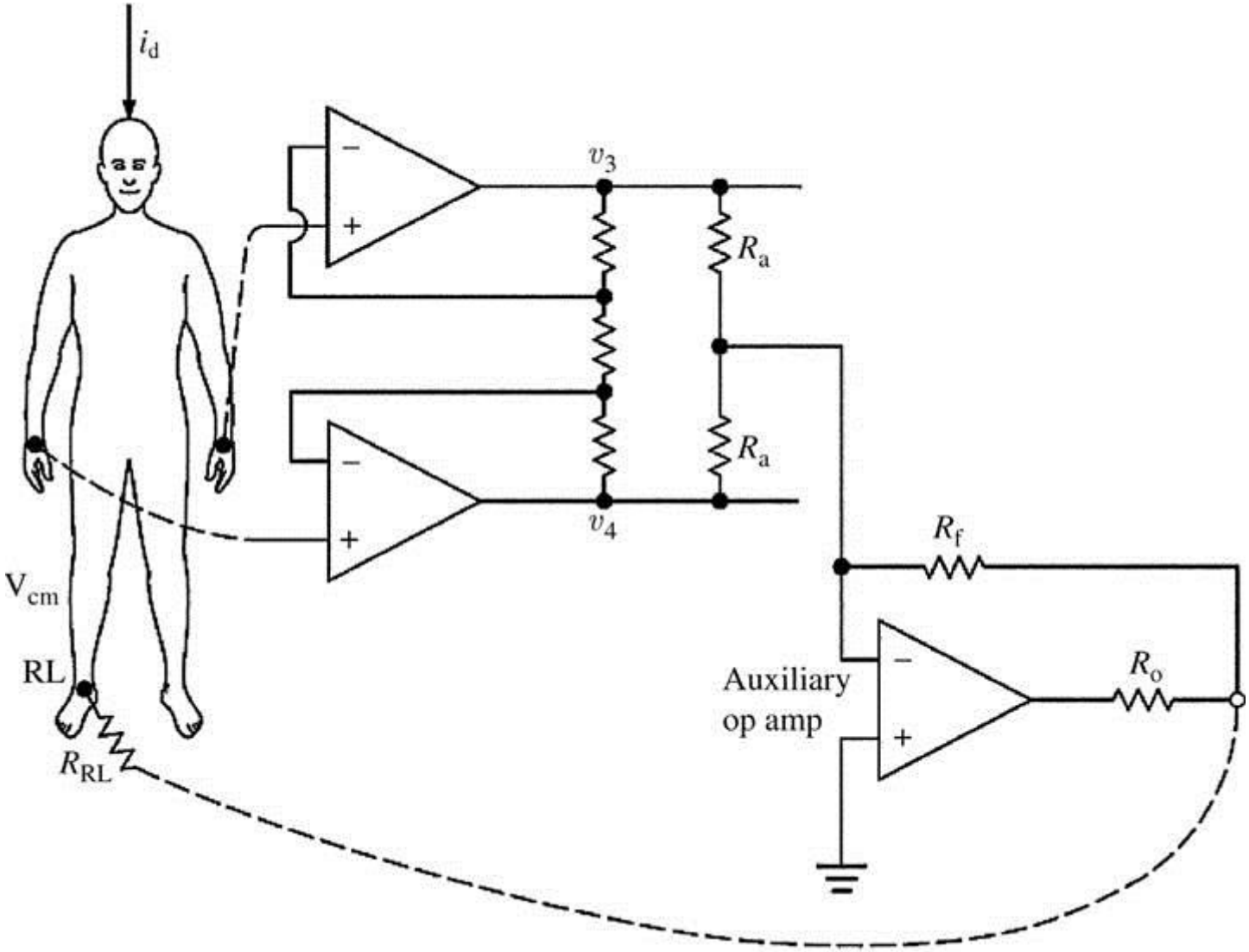

EEG System 1

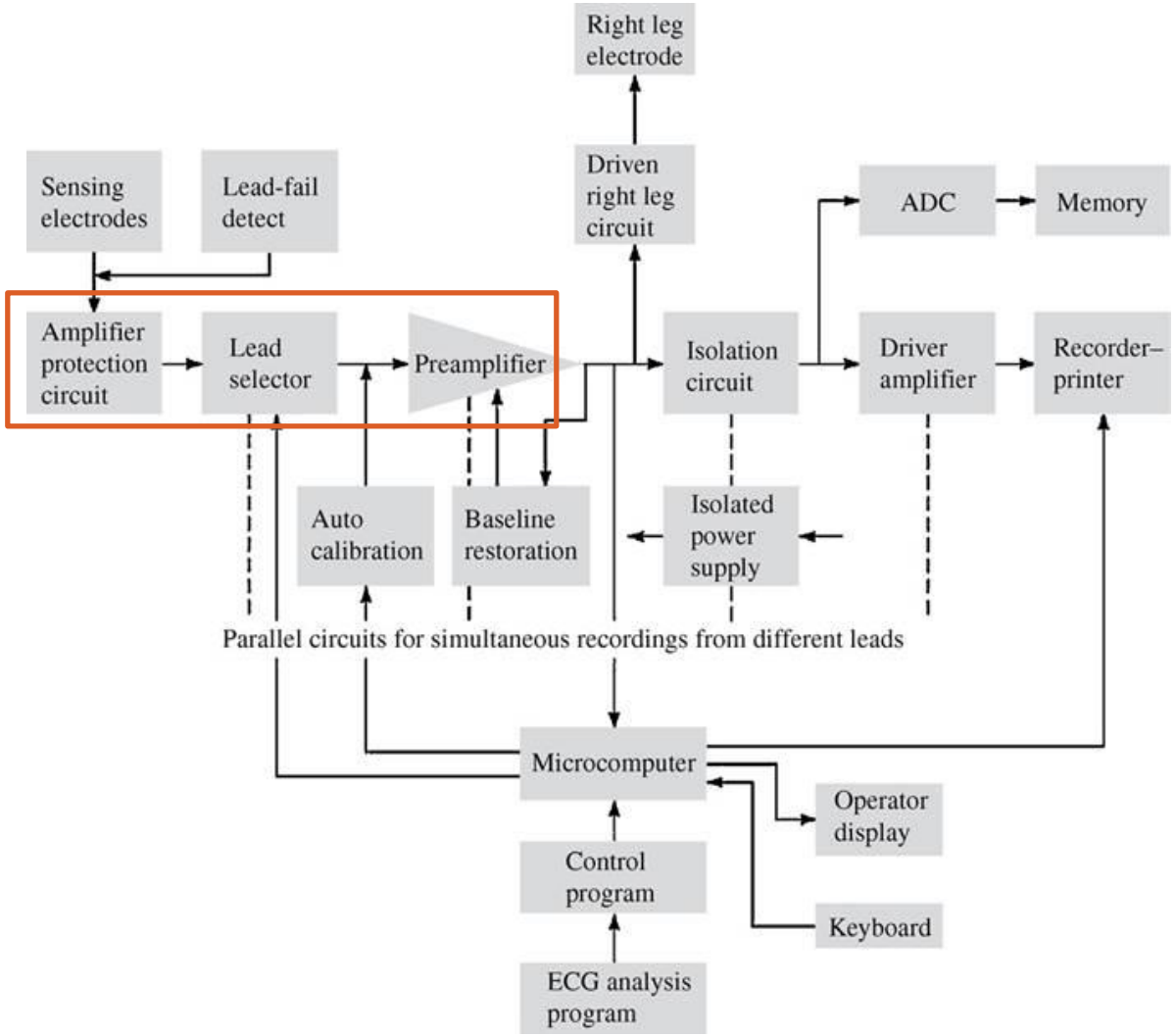
Right leg electrode
Sensing electrodes
Lead-fail detect
Driven right leg circuit
ADC
Memory
Amplifier protection circuit
Lead selector
Preamplifier
Isolation circuit
Driver amplifier
Recorder–printer
Auto calibration
Baseline restoration
Isolated power supply
Parallel circuits for simultaneous recordings from different leads
Microcomputer
Operator display
Control program
Keyboard
ECG analysis program

EEG System 2

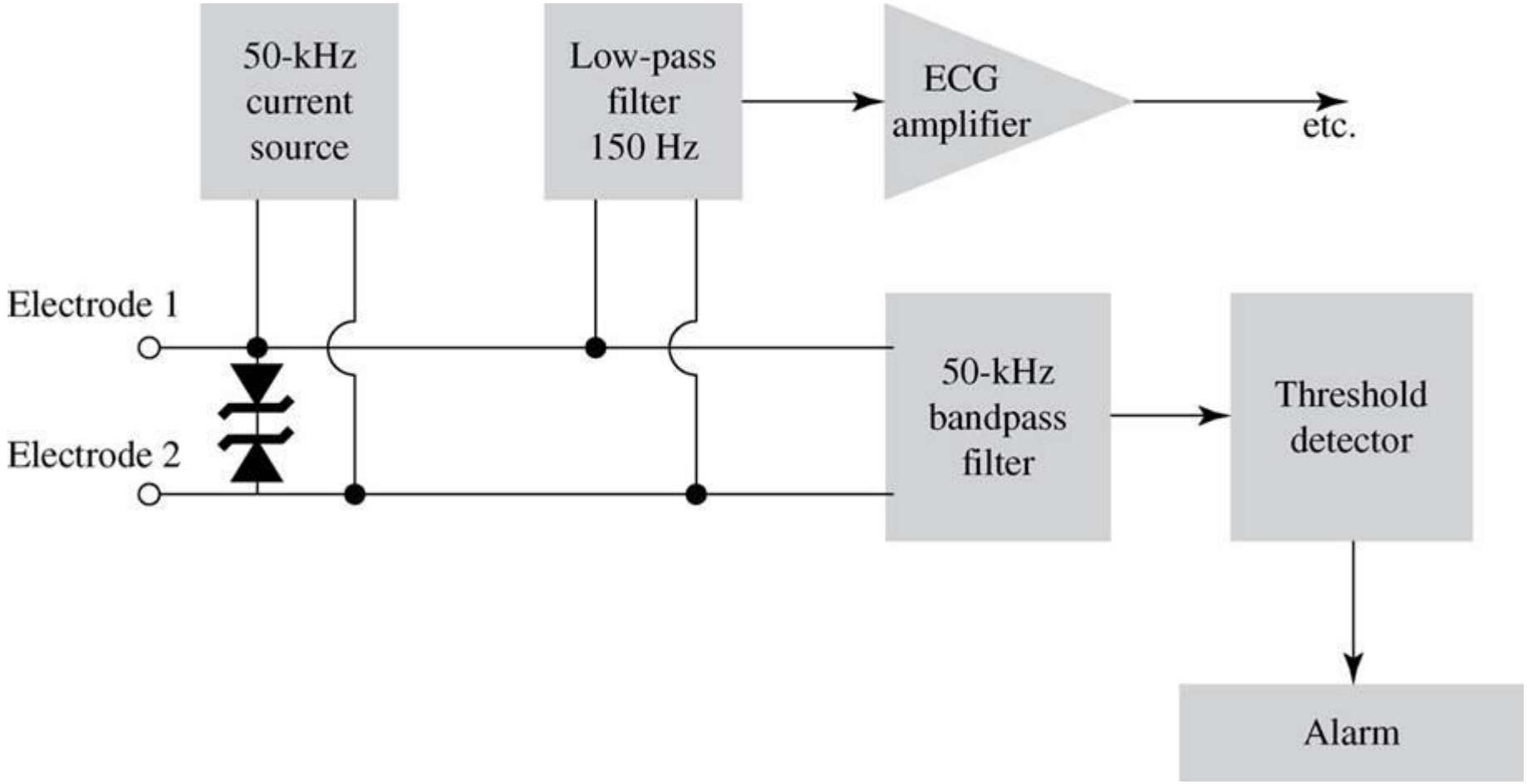
50-kHz current source
Low-pass filter 150 Hz
ECG amplifier
etc.
Electrode 1
Electrode 2
50-kHz bandpass filter
Threshold detector
Alarm

ECG Amplifier

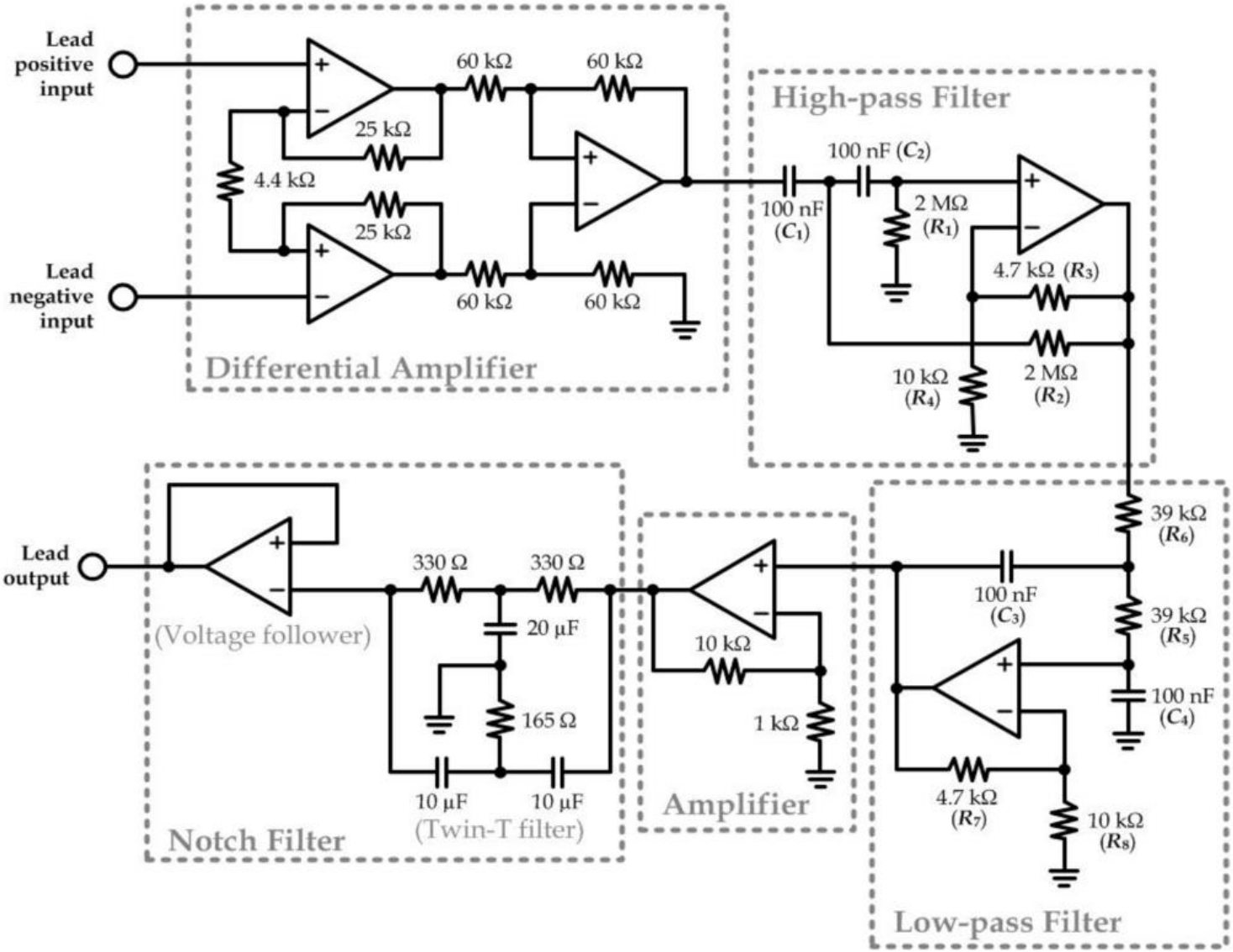

Lab 5

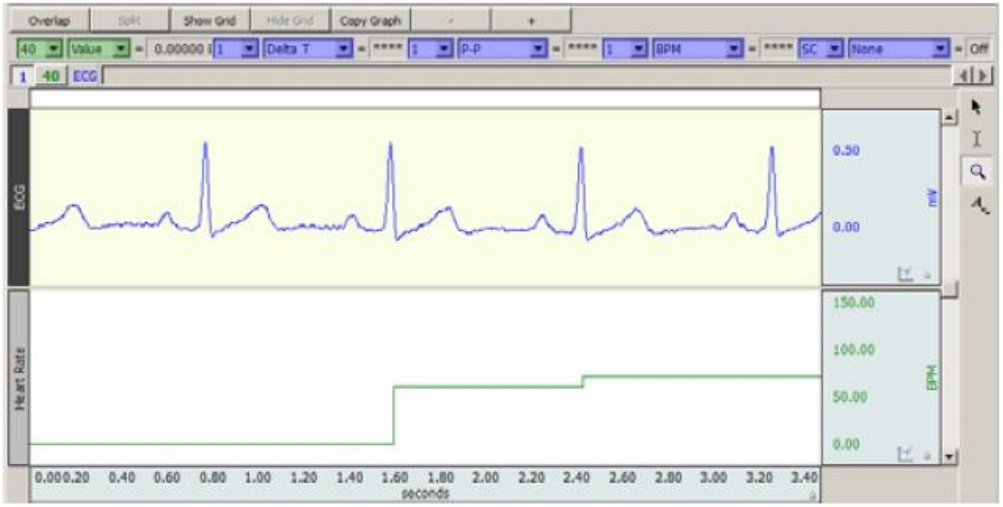
Overlap
Split
Show Grid
Hide Grid
Copy Graph
Value
Delta T
P-P
BPM
None
Off
ECG
Heart Rate
0.50
0.00
mV
150.00
100.00
50.00
0.00
BPM
0.00 0.20 0.40 0.60 0.80 1.00 1.20 1.40 1.60 1.80 2.00 2.20 2.40 2.60 2.80 3.00 3.20 3.40
seconds

Lab 5

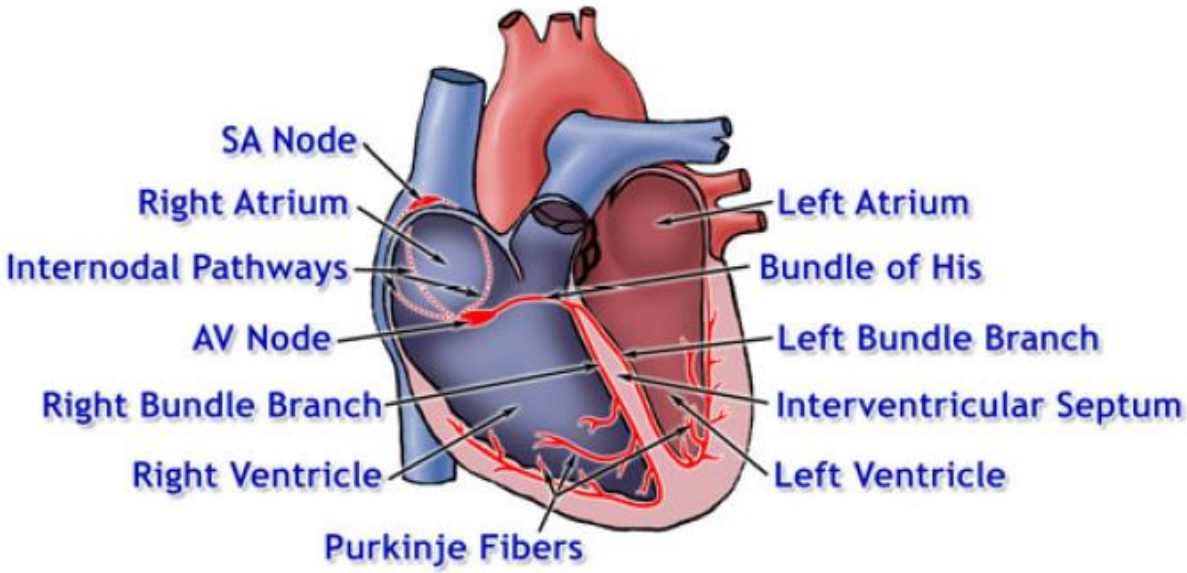
SA Node
Right Atrium
Internodal Pathways
AV Node
Right Bundle Branch
Right Ventricle
Purkinje Fibers
Left Atrium
Bundle of His
Left Bundle Branch
Interventricular Septum
Left Ventricle

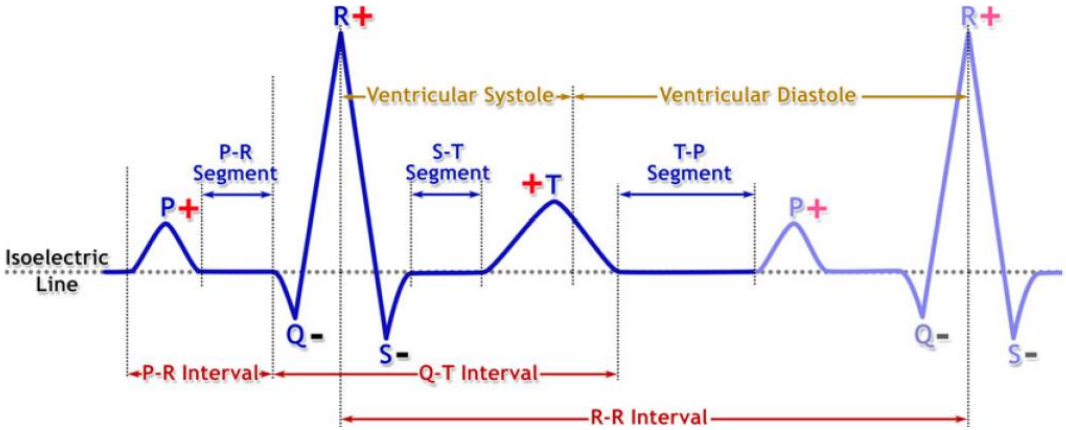
R+
R+
Ventricular Systole
Ventricular Diastole
P-R Segment
S-T Segment
T-P Segment
P+
+T
P+
Isoelectric Line
Q-
S-
Q-
S-
P-R Interval
Q-T Interval
R-R Interval

Lab 5

ECG COMPONENT		*Measurement area…*	*Represent…*	**Duration** *(seconds)*	**Amplitude** (millivolts)
Waves	**P**	begin and end on isoelectric line (baseline); normally upright in standard limb leads	depolarization of the right and left atria.	0.07 – 0.18	< 0.25
	QRS complex	begin and end on isoelectric line (baseline) from start of Q wave to end of S wave	depolarization of the right and left ventricles. Atrial repolarization is also part of this segment, but the electrical signal for atrial repolarization is masked by the larger QRS complex (see Fig. 5.2)	0.06 – 0.12	0.10 – 1.50
	T	begin and end on isoelectric line (baseline)	repolarization of the right and left ventricles.	0.10 – 0.25	< 0.5
Intervals	**P-R**	from start of P wave to start of QRS complex	time from the onset of atrial depolarization to the onset of ventricular depolarization.	0.12-0.20	
	Q-T	from start of QRS complex to end of T wave	time from onset of ventricular depolarization to the end of ventricular repolarization. It represents the refractory period of the ventricles.	0.32-0.36	
	R-R	from peak of R wave to peak of succeeding R wave	time between two successive ventricular depolarizations.	0.80	
Segments	**P-R**	from end of P wave to start of QRS complex	time of impulse conduction from the AV node to the ventricular myocardium.	0.02 – 0.10	
	S-T	between end of S wave and start of T wave	period of time representing the early part of ventricular repolarization during which ventricles are more or less uniformly excited.	< 0.20	
	T-P	from end of T wave to start of successive P wave	time from the end of ventricular repolarization to the onset of atrial depolarization.	0.0 – 0.40	

Lab 5

The particular arrangement of two electrodes (one **positive**, one **negative**) with respect to a third electrode (the **ground**) is called a **lead**. The electrode positions for the different leads have been standardized. For this lesson, you will record from **Lead II**, which has a positive electrode on the left ankle, a negative electrode on the right wrist, and the ground electrode on the right ankle. Typical Lead II .

The dominant ECG component in any normal standard lead record is the QRS complex. Usually, in a Lead II record the Q and S waves are small and negative and the R wave is large and positive as shown in Fig. . However, it is important to note many factors, normal and abnormal, determine the duration, form, rate, and rhythm of the QRS complex.

Summary

- Heart Function
- ECG System
- ECG circuit

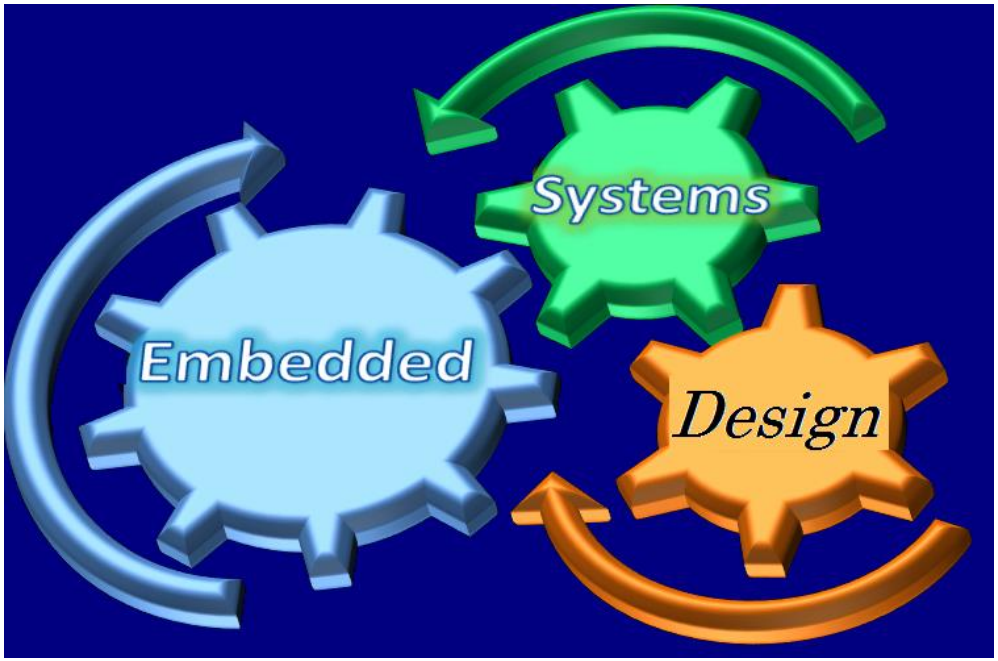

Thank You

EECS 4641: Medical Devices

Lecture #8: Bio-amplifier

Prof. Ebrahim Ghafar-Zadeh
Department of Electrical Engineering and Computer Science
Faculty of Science and Engineering
York University

Jan. 29th, 2016

Bio- Amplifier

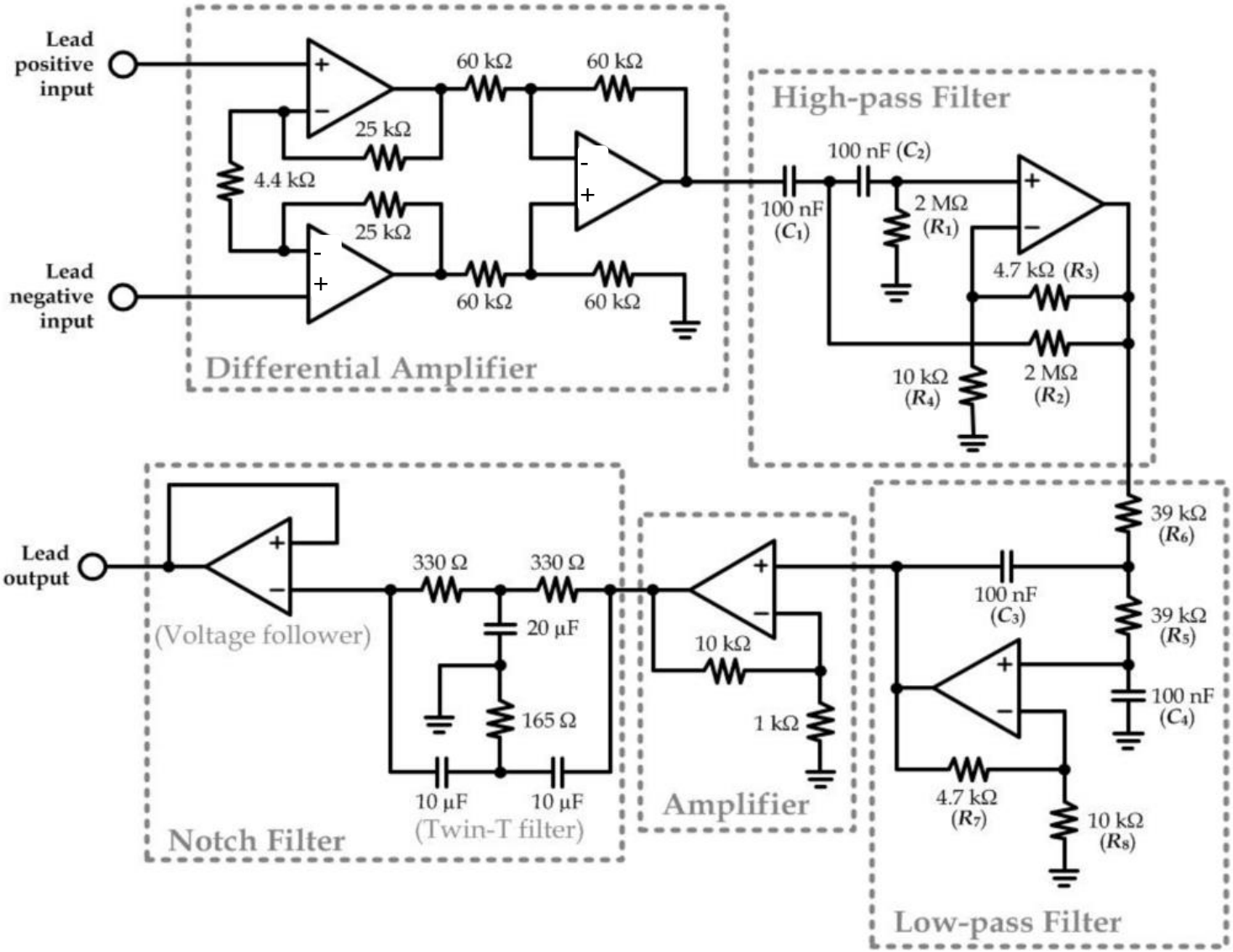

Voltage Gian

1. $(Vi^{+} - Vi^{-}) = V_{AB}$
2. $(Vo^{+} - Vo^{-}) * 4.4/(54.4) = V_{AB}$

$$(Vo^{+} - Vo^{-})/(Vi^{+} - Vi^{-}) = 54.4/4.4 = 12.36$$

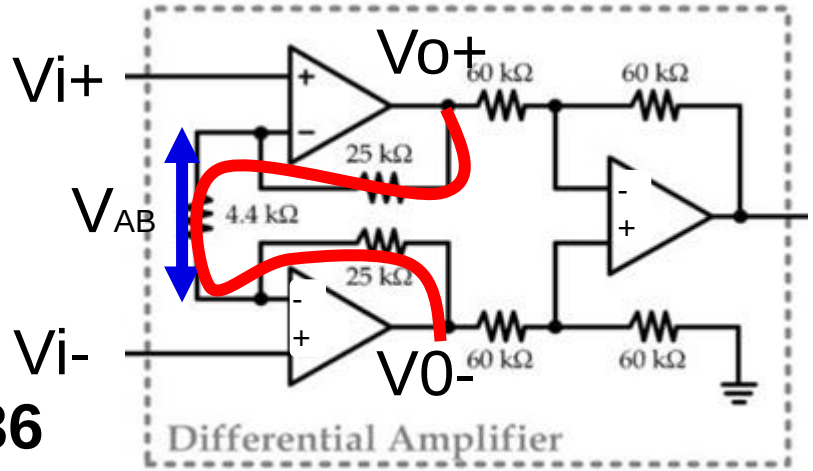

Voltage Gian

1. $V_{out}/V_{o}^{+}=-1$ ($V_{o}^{-}=0$)
1. $V_{out}/V_{o}^{-}=+1$ ($V_{o}^{+}=0$)

$$V_{out}/(V_{o}^{+}-V_{o}^{-})=1$$

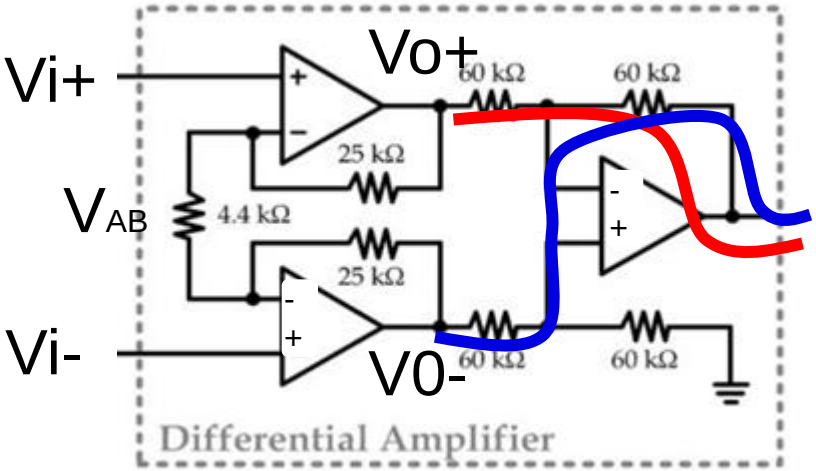

Voltage Gian

$Vout/(Vi^{+}-Vi^{-})=1*12.36=12.36$

G=12.36

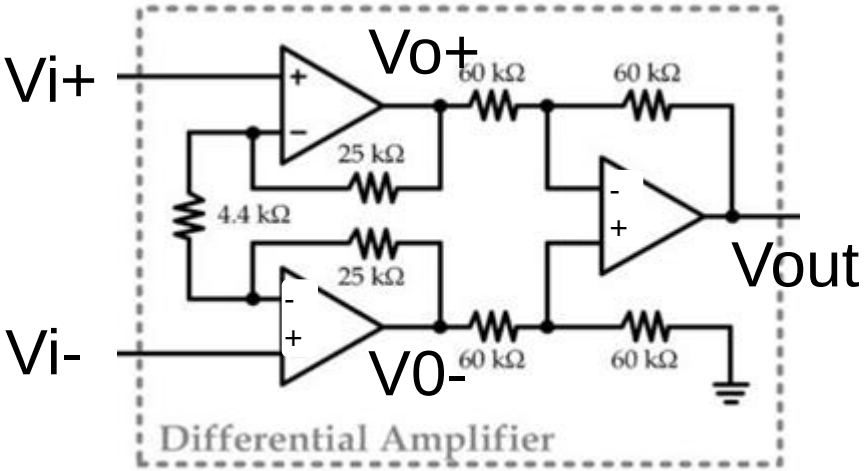

HF Filter

1. VB=Vout/1.5

2. VC=VB=Vout/1.5

Vi

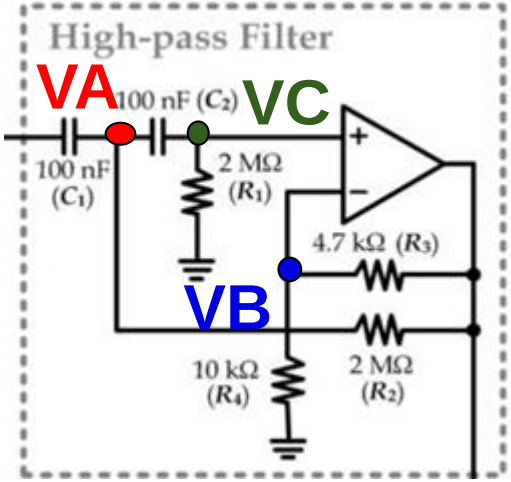

Vout

3. VA=(Vi-VA)jCw+(VC-VA)jCw+(Vout-VA)/2MΩ

4. Vout/2MΩ=(VA-Vout)jCw

Obtain H(w) Vout/Vi as a function of w= 2πf

LP Filter

R=39kΩ

1. **VC=VA ((1/jCw)/(1/jCw)+R)**

2. **VC=VB**

3. **VB=Vout/1.5**

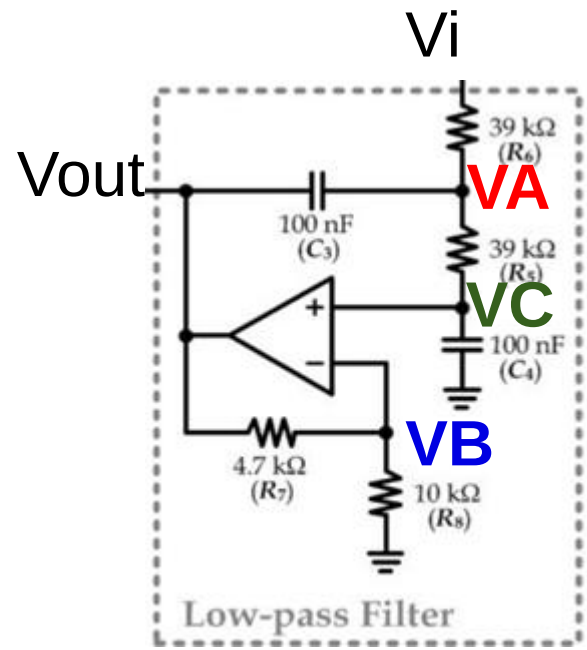

4. **(Vi-VA)/R+(VC-VA)/R+(Vout-VA)jCw=0**

Obtain H(w) Vout/Vi as a function of w= 2πf

Voltage Gain

G=1+10=11

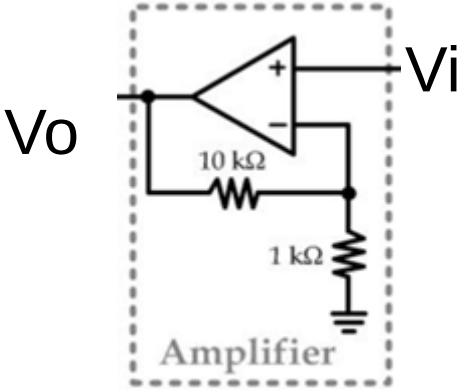

Notch Filter

R=390Ω C=10μF

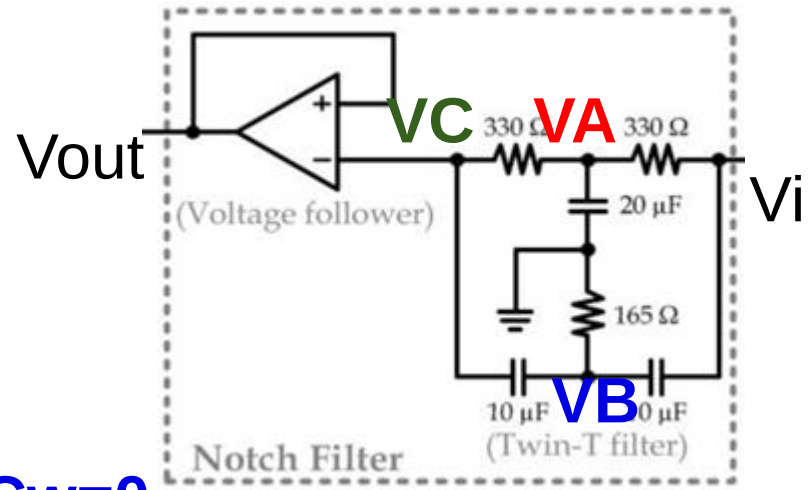

1. **(VC-VA)/R =(VB-VC)jCw**

2. **VC=Vout**

3. **(Vi-VA)/R+(VC-VA)/R-(VA)jCw=0**

4. **(Vi-VB)jCw+(VC-VB)jCw-(VB)/R=0**

Obtain H(w) Vout/Vi as a function of w= 2πf

Willem Einthoven

Invented ECG
Nobel Prize Winner

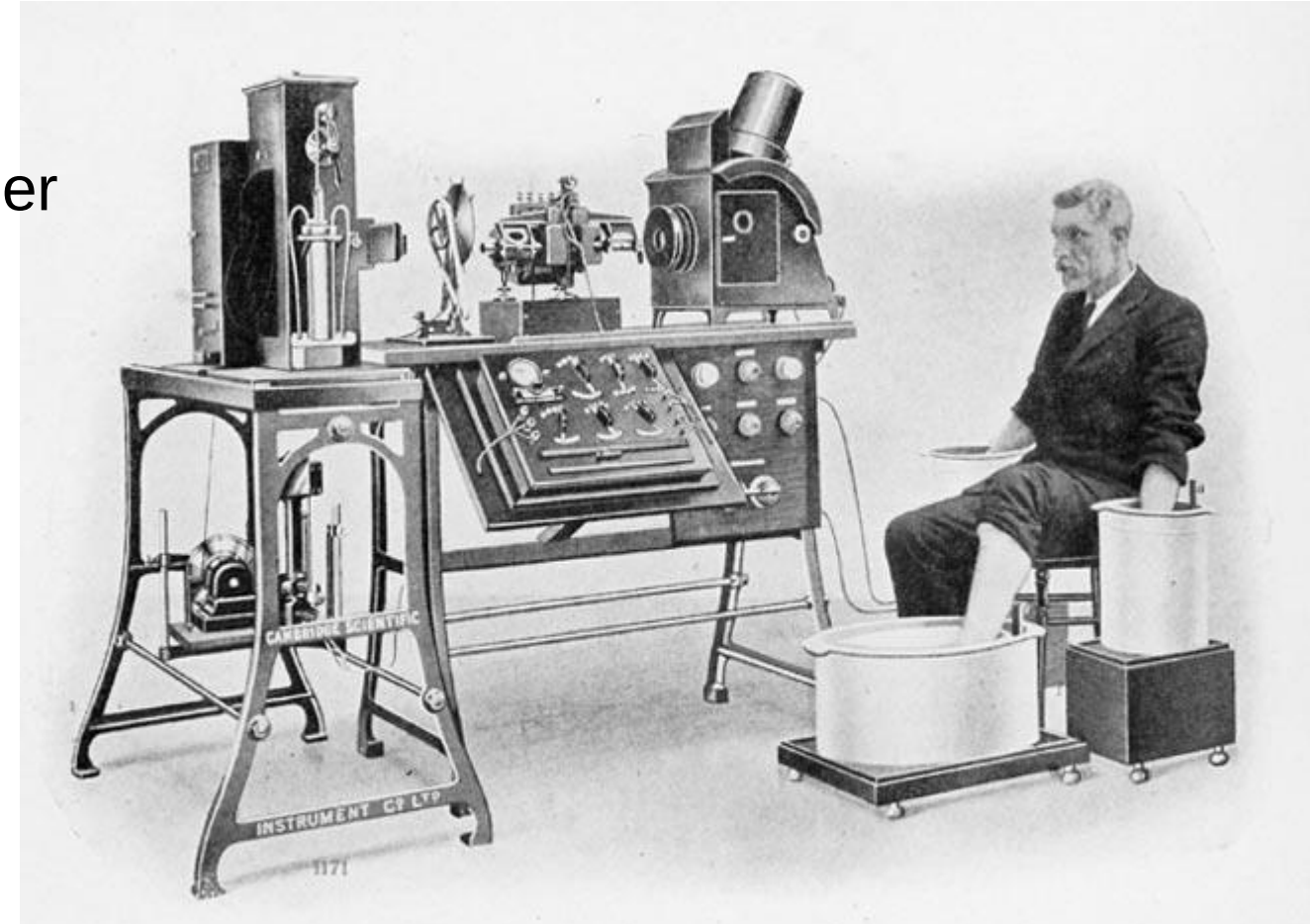

Photograph of a Complete Electrocardiograph, Showing the Manner in which the Electrodes are Attached to the Patient, In this Case the Hands and One Foot Being Immersed in Jars of Salt Solution

Willem Einthoven

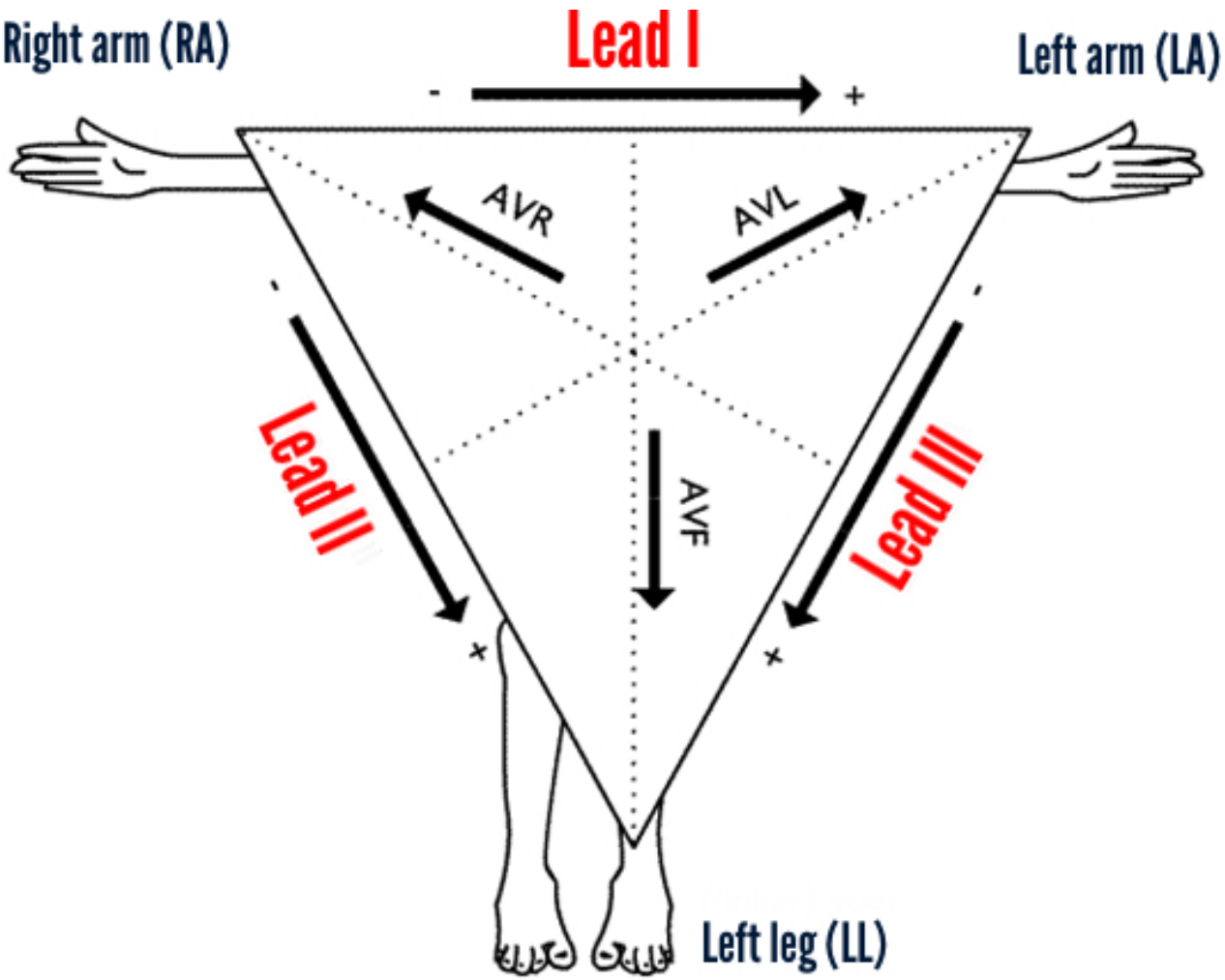

Summary

- Bioinstrumentation
- Willem Einthoven

Thank You

EECS4641:

Medical Devices

Lecture #9: Bode Plot & Active Filters

Prof. Ebrahim Ghafar-Zadeh
Department of Electrical Engineering and Computer Science
Lassonde Scholl of Engineering
York University

Feb. 1st, 2016

YORK UNIVERSITÉ UNIVERSITY

ECG System

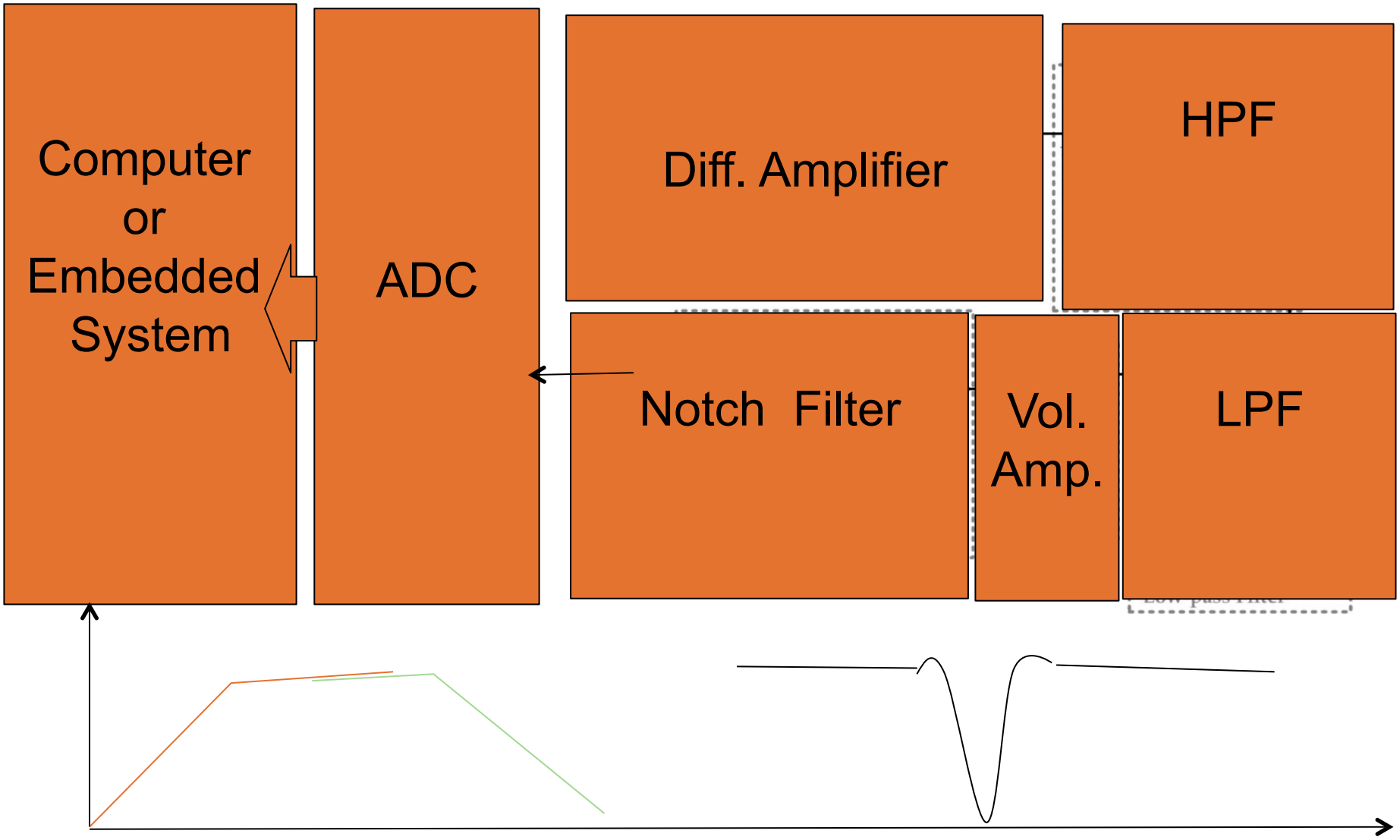
Computer or Embedded System
ADC
Diff. Amplifier
HPF
Notch Filter
Vol. Amp.
LPF

RC Passive Filter

	Circuit	Time Domain	Frequency Domain
Highpass	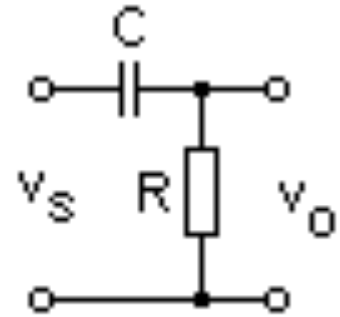	$\frac{dv_o}{dt} + \frac{v_o}{RC} = \frac{dv_s}{dt}$	$\frac{v_o}{v_s} = \frac{R}{R + \frac{1}{j\omega C}}$
Lowpass	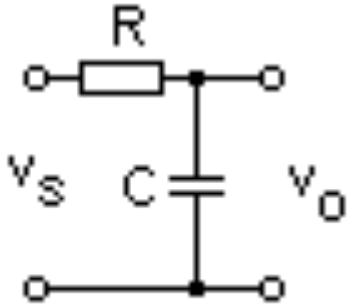	$\frac{dv_o}{dt} + \frac{v_o}{RC} = \frac{v_s}{RC}$	$\frac{v_o}{v_s} = \frac{\frac{1}{j\omega C}}{R + \frac{1}{j\omega C}}$

Single-Pole Networks

Bode plots: RC First Order

$\omega_c = 1/RC = 2\Pi f = \omega$

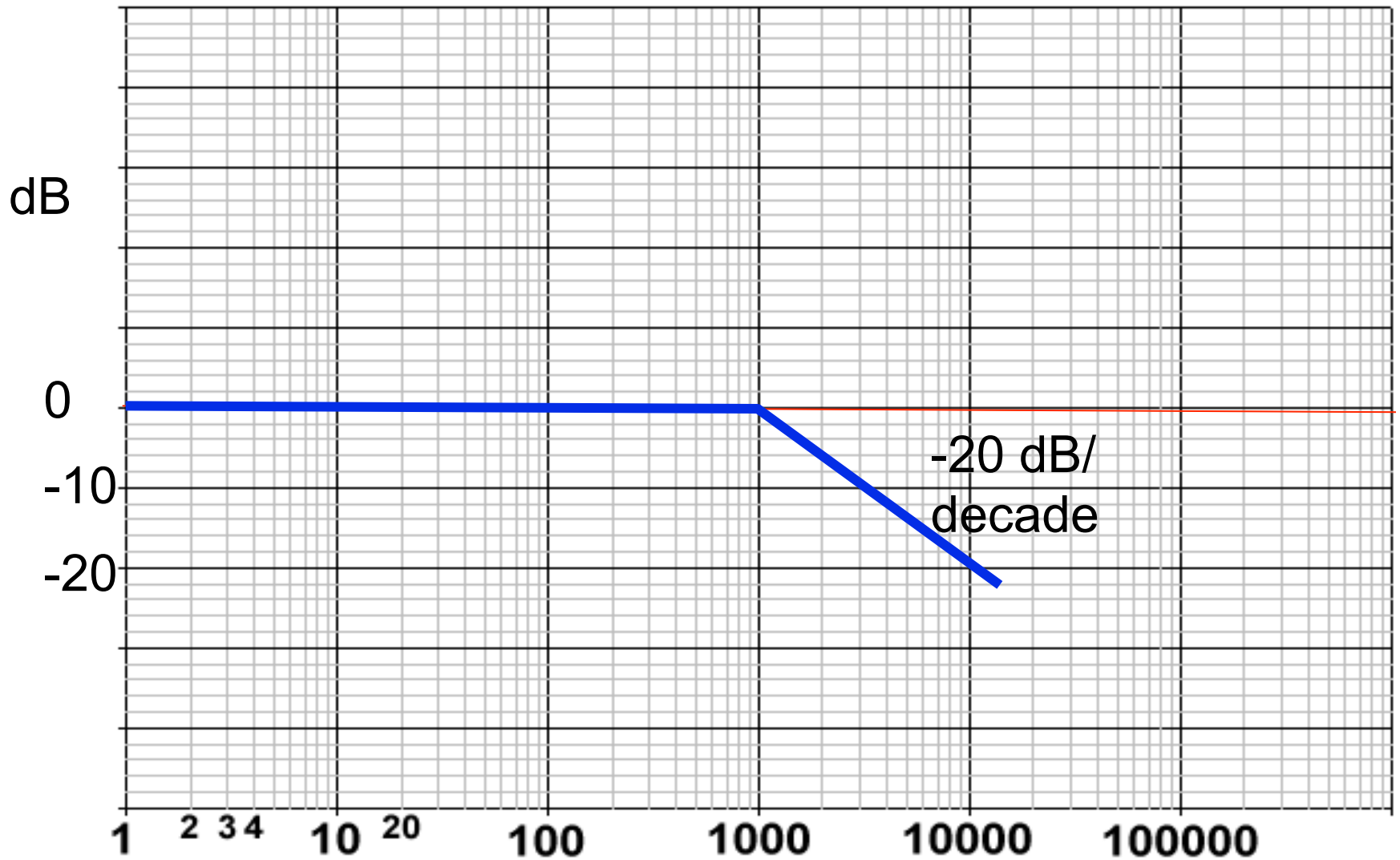

Bode plots: RC First Order

$$H_{\mathrm{lp}}(\mathrm{j}\omega) = \frac{\mathrm{j}\omega/\omega_c}{1+\mathrm{j}\frac{\omega}{\omega_c}} .$$

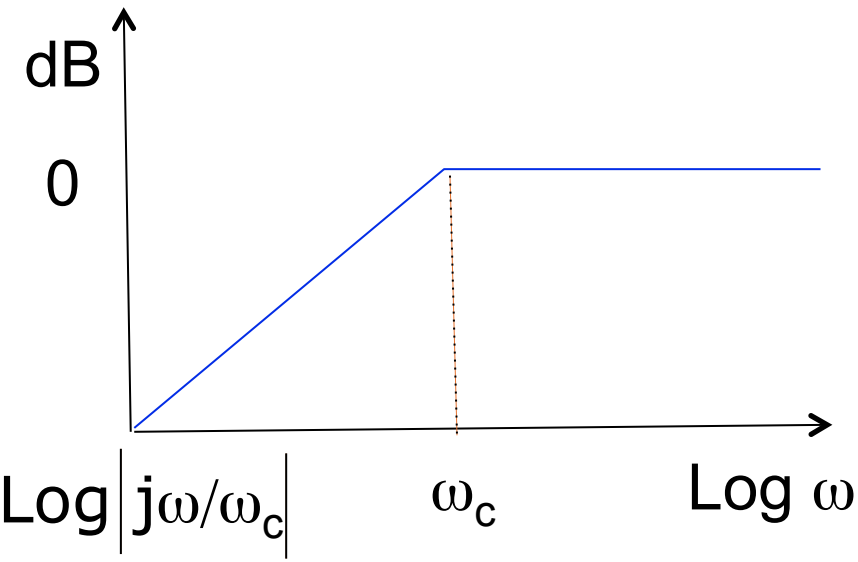

$$A_{\mathrm{vdB}} = 20 \cdot \log |H_{\mathrm{lp}}(\mathrm{j}\omega)|$$

$$= 20 \cdot \log \frac{1}{\left|1+\mathrm{j}\frac{\omega}{\omega_c}\right|} \quad +20\mathrm{Log}\left|\mathrm{j}\omega/\omega_c\right|$$

$$= -20 \cdot \log \left|1+\mathrm{j}\frac{\omega}{\omega_c}\right| \quad +20\mathrm{Log}\left|\mathrm{j}\omega/\omega_c\right|$$

$$= -10 \cdot \log \left(1+\frac{\omega^2}{\omega_c^2}\right) \quad +10\mathrm{Log}\ (\omega/\omega_c)^2$$

Bode plots: RC First Order

$\omega_c = 1/RC = 2\Pi f = \omega$

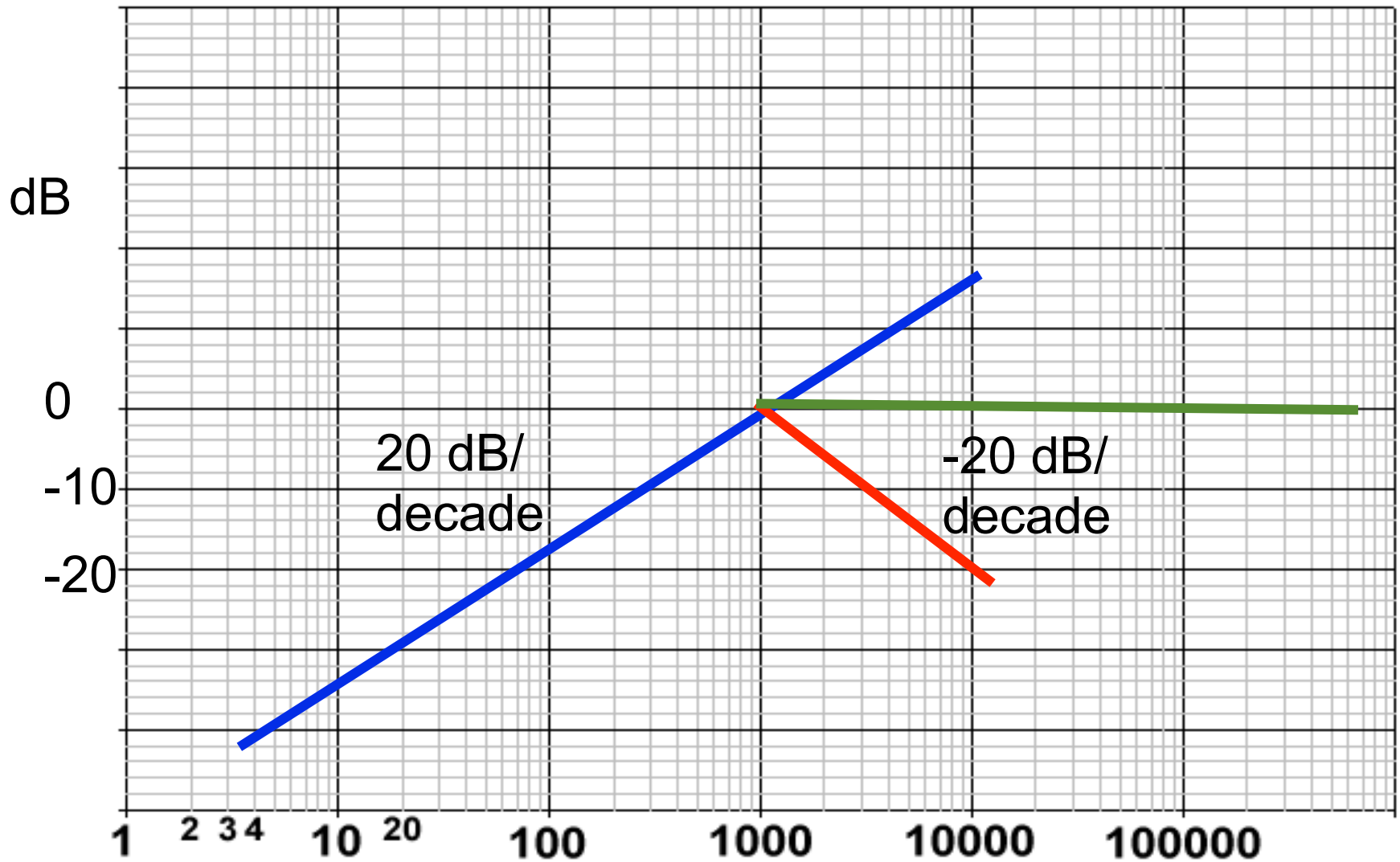

Bode plots: Active LPF

$$H_{\mathrm{lp}}(\mathrm{j}\omega) = \frac{K}{1 + \mathrm{j}\frac{\omega}{\omega_{\mathrm{c}}}}.$$

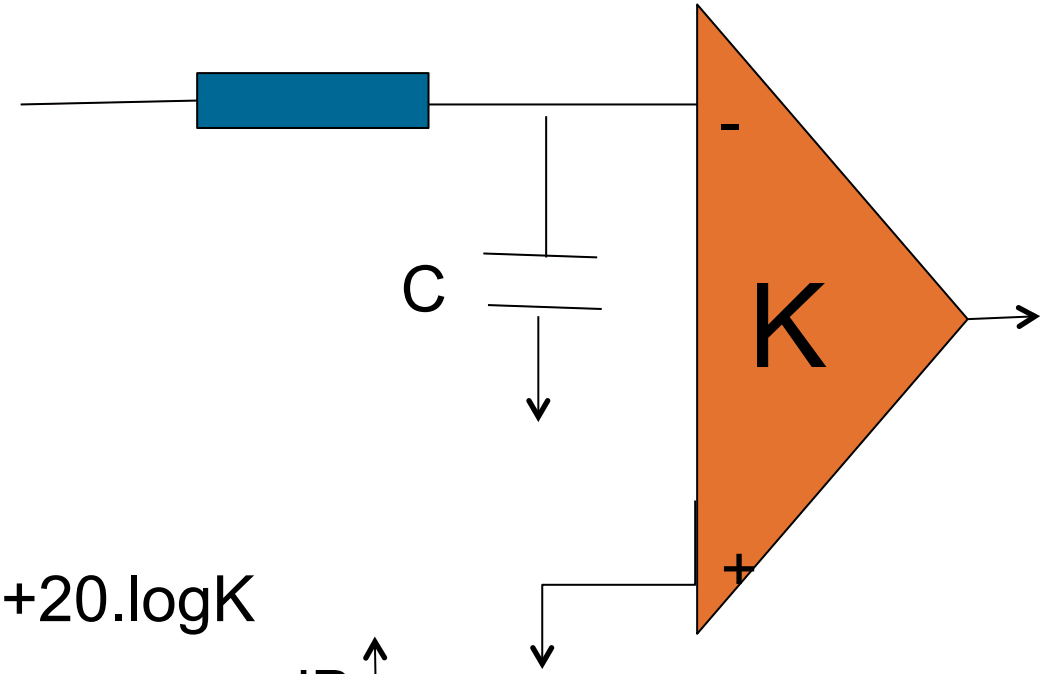

$$A_{\mathrm{vdB}} = 20 \cdot \log |H_{\mathrm{lp}}(\mathrm{j}\omega)|$$

$$= 20 \cdot \log \frac{1}{\left|1 + \mathrm{j}\frac{\omega}{\omega_{\mathrm{c}}}\right|} \text{ +20.logK}$$

$$= -20 \cdot \log \left|1 + \mathrm{j}\frac{\omega}{\omega_{\mathrm{c}}}\right| \text{ +20.logK}$$

$$= -10 \cdot \log \left(1 + \frac{\omega^2}{\omega_{\mathrm{c}}^2}\right) \text{ +20.logK}$$

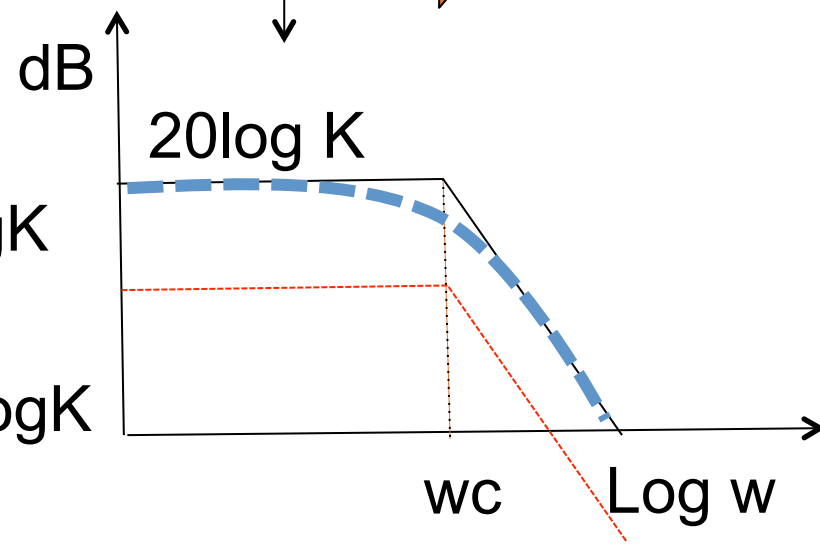

Bode plots: Active LPF

$$H_{\mathrm{lp}}(\mathrm{j}\omega) = \frac{K}{1 + \mathrm{j}\frac{\omega}{\omega_{\mathrm{c}}}}.$$

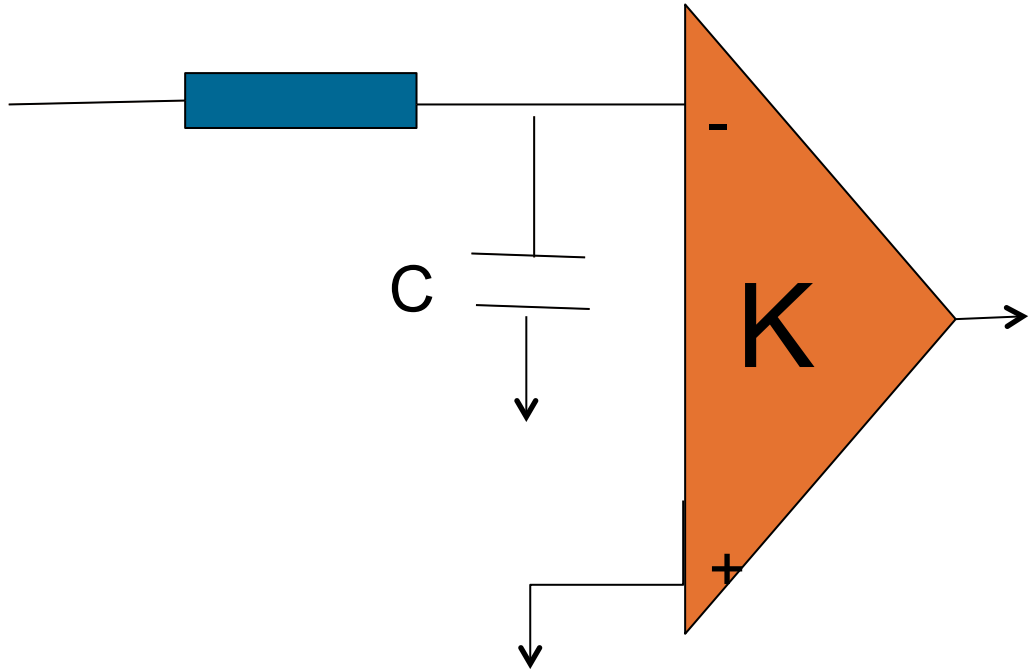

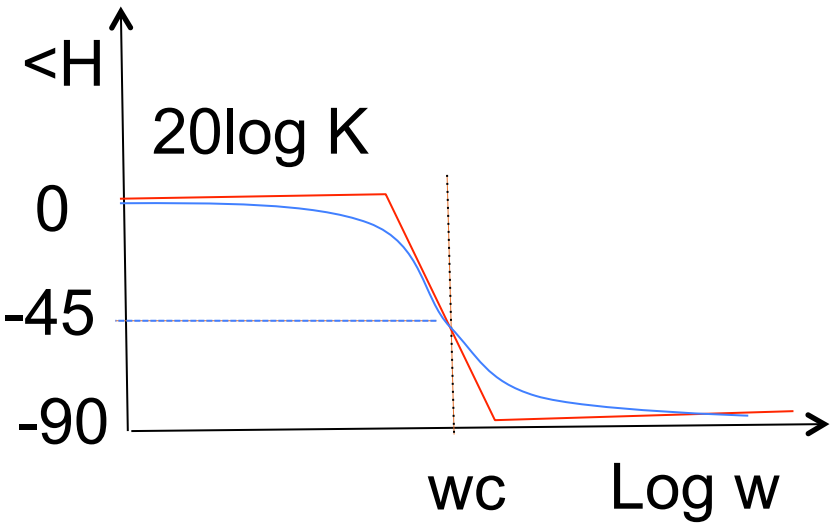

Bode plots: RC First Order

$\omega_c = 1/RC = 2\Pi f = \omega$

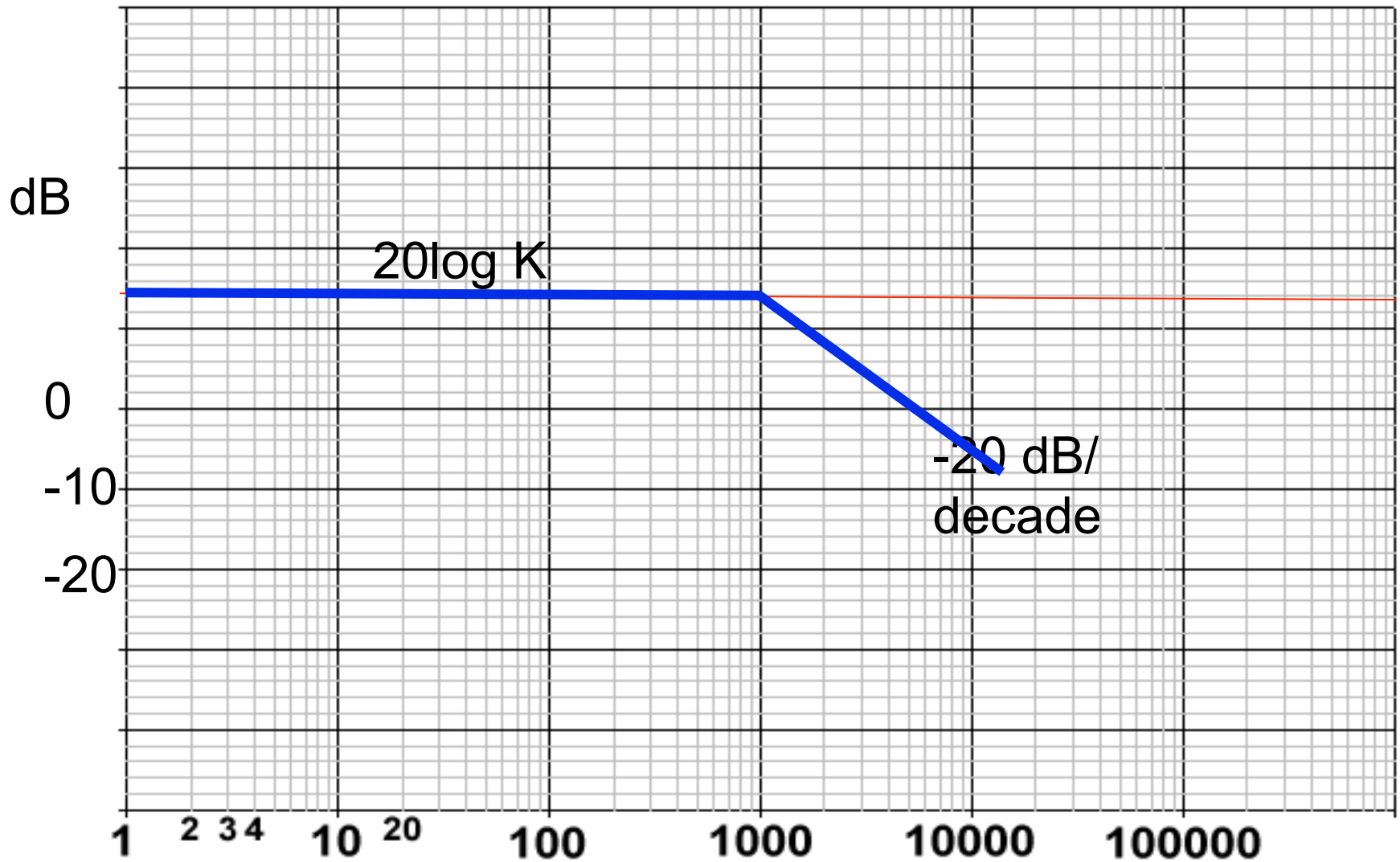

Bode plots: Standard H(s)

$$H(s)=K\frac{(s-z_1)(s-z_2)\Lambda(s-z_m)}{(s-p_1)(s-p_2)\Lambda(s-p_n)}$$

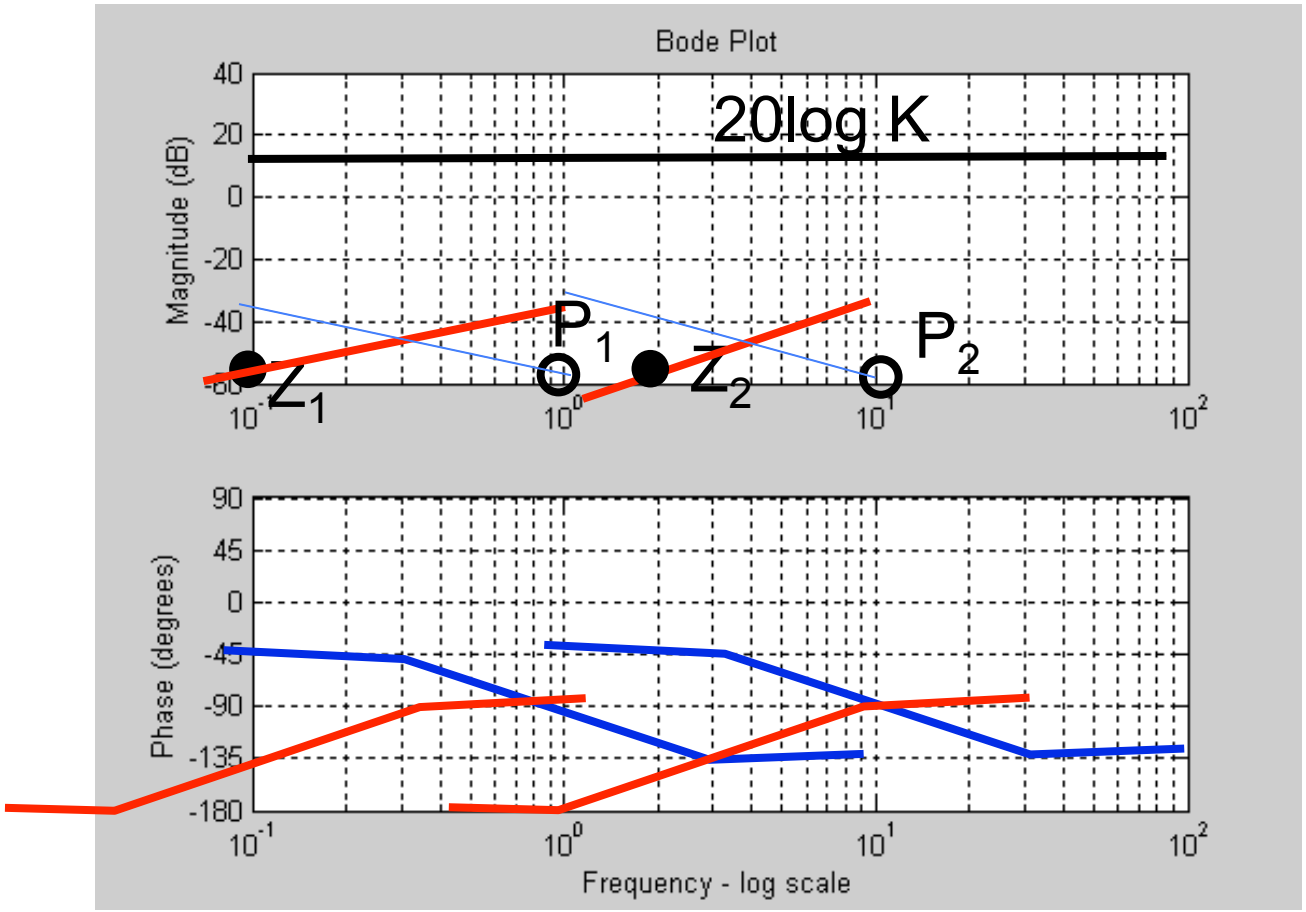

Rules

Magnitude:
In Each Zero, the magnitude increases with a +slope = 20dB/dec)
In each Pole the magnitude decreases with a -Slope = -20dB/dec)
Angle:
From a decade before Each zero, the angle increases with a slop +90/2dec (Add +45 at zero)
From a decade before each pole decreases with a slopequal to -90/dec) (add -45 at pole)

Two cascade filters

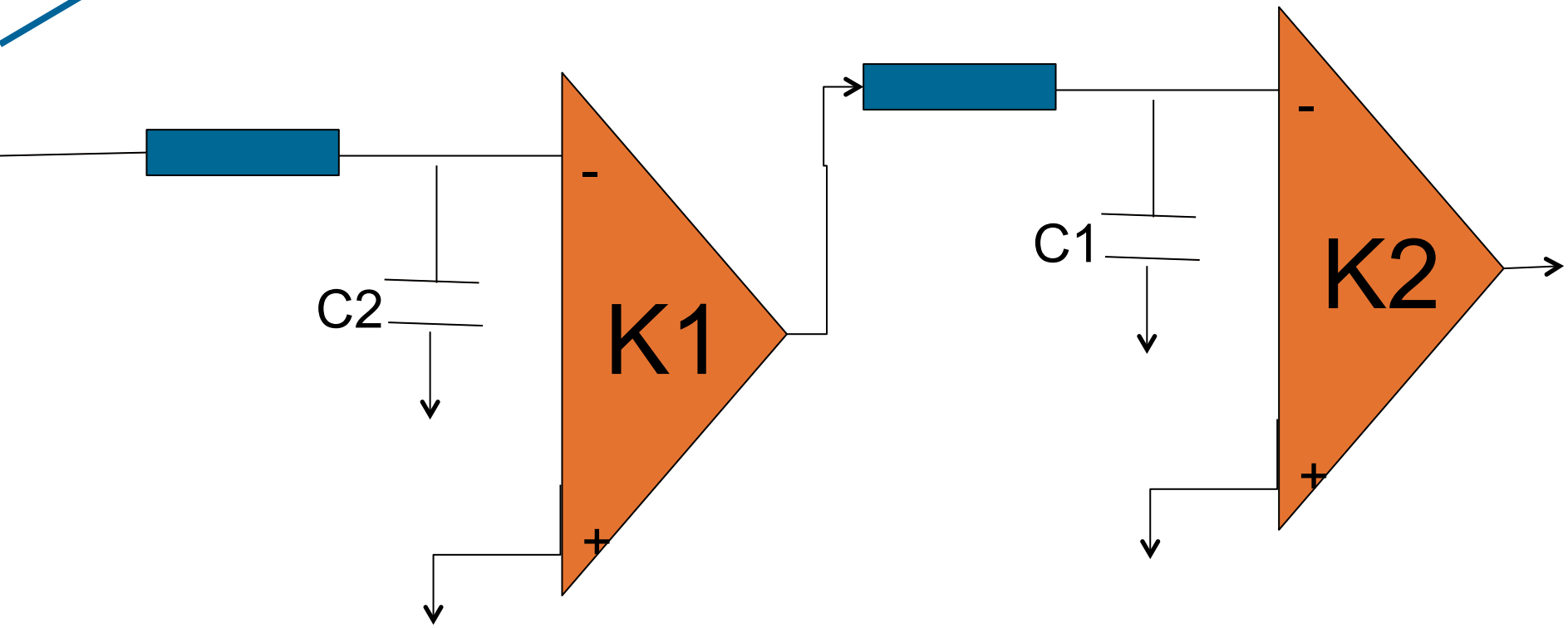

$$H_{\mathrm{lp}}(\mathrm{j}\omega) = \frac{K1}{1+\mathrm{j}\frac{\omega}{\omega_{\mathrm{c}1}}} \times \frac{K2}{1+\mathrm{j}\frac{\omega}{\omega_{\mathrm{c}2}}}.$$

Bode plots: two cascade filters

f_c=10 Hz , 10KHz

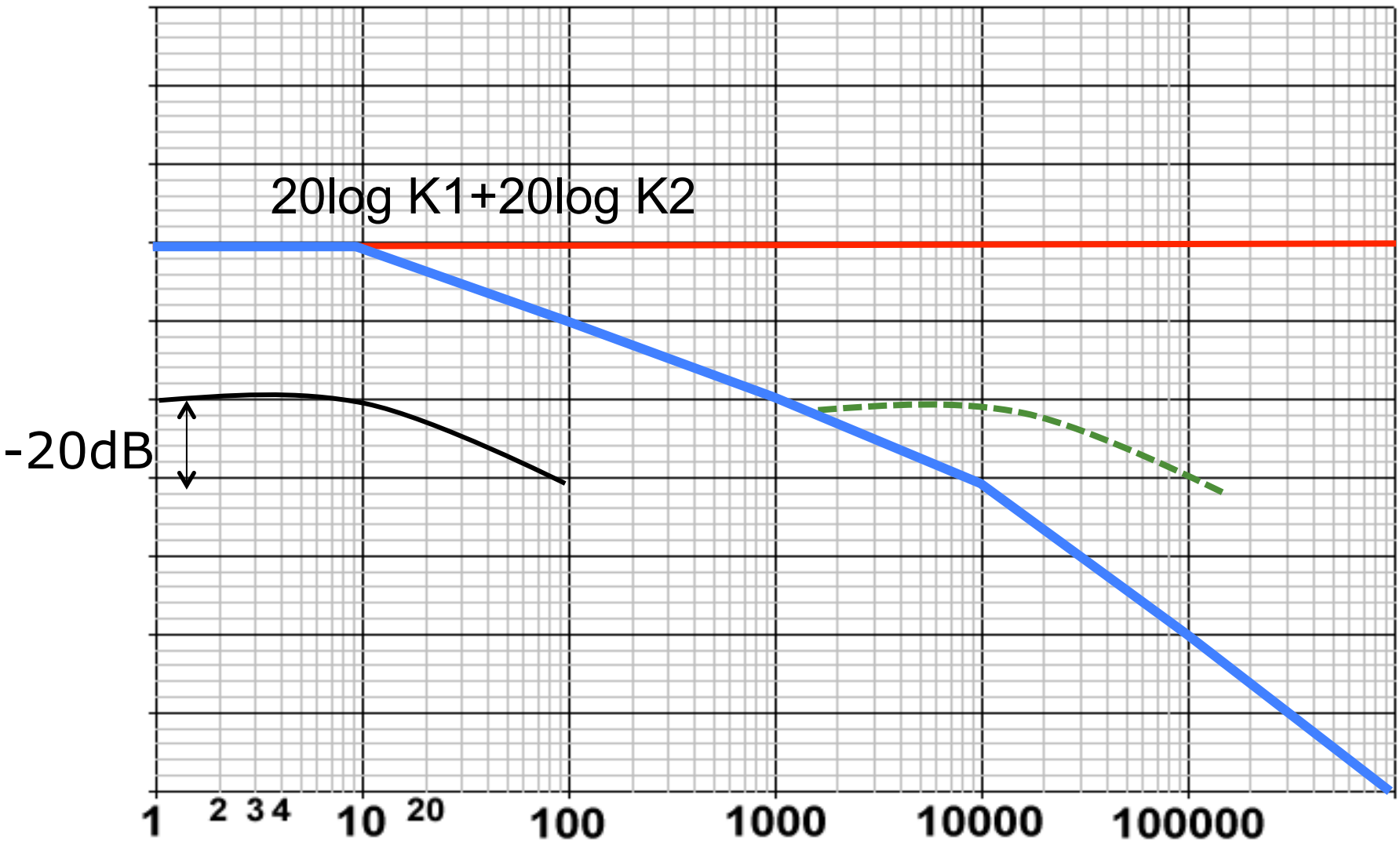

Bode plots: Second Order

f_c=10 Hz , 10KHz

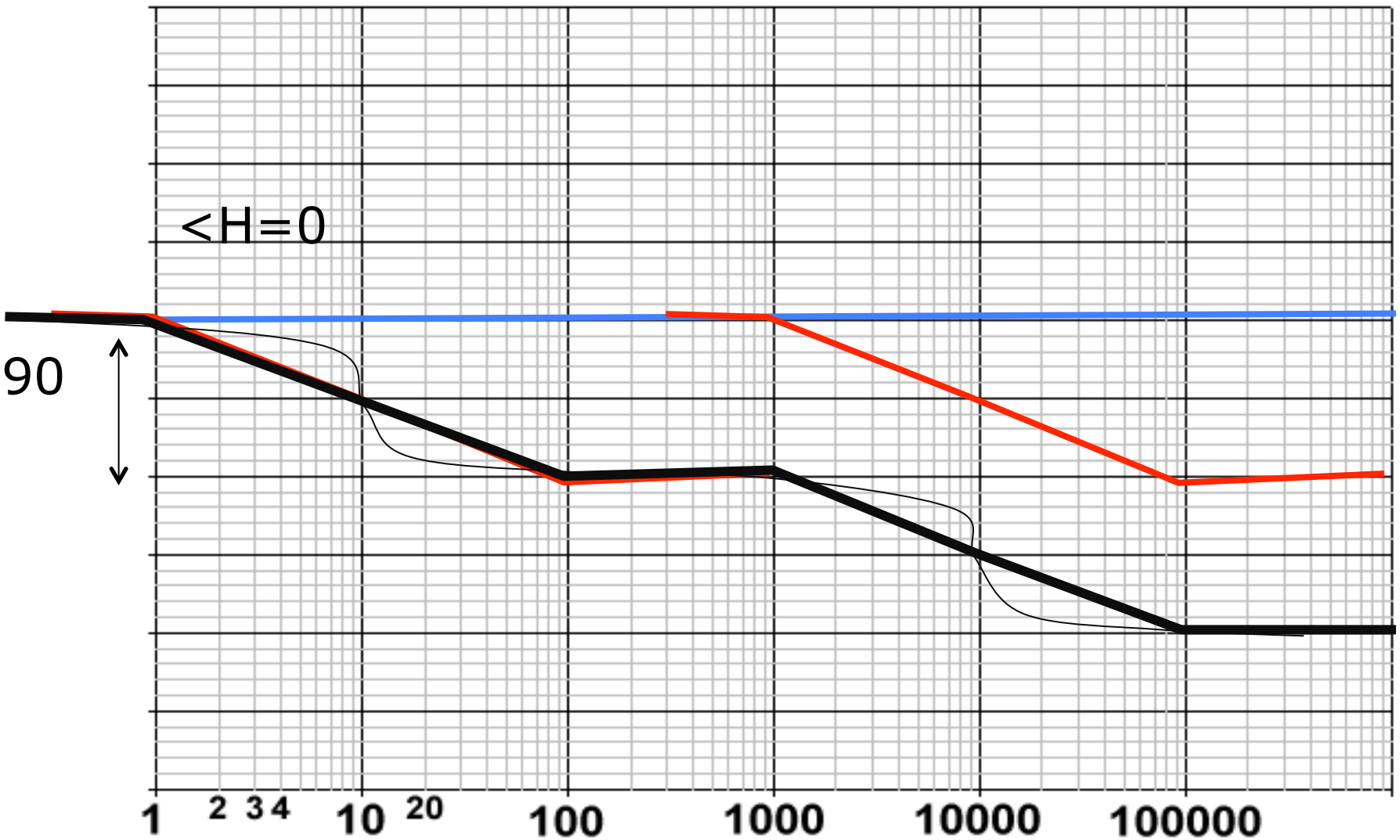

Bode plots: Second Order

$$H(s) = k_0 \frac{\omega_n^2}{s^2 + 2\zeta\omega_n s + \omega_n^2}$$

$$H(\omega) = \frac{\omega_n^2}{-\omega^2 + 2\zeta\omega_n j\omega + \omega_n^2} = \frac{1}{1 - (\frac{\omega}{\omega_n})^2 + j2\zeta(\frac{\omega}{\omega_n})}$$

$$20log_{10}|H(\omega)| = -10log_{10}[(1 - \frac{\omega^2}{\omega_n^2})^2 + (2\zeta\frac{\omega}{\omega_n}^2)]$$

$$\angle H(\omega) = -tan^{-1}\frac{2\zeta\omega/\omega_n}{1 - (\omega/\omega_n)^2}$$

Examples: Second Order

$$T(s) = \frac{\omega_n^2}{s^2 + 2\zeta\omega_n s + \omega_n^2}$$

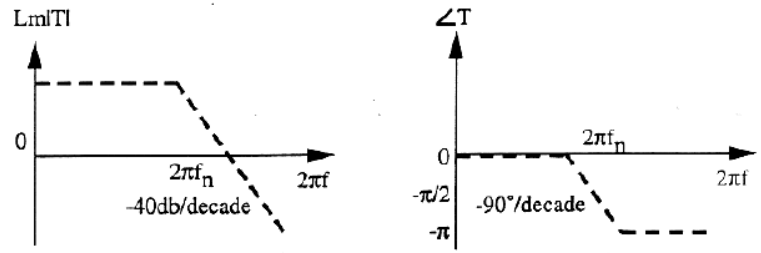

$$T(s) = \frac{2\zeta\omega_n s}{s^2 + 2\zeta\omega_n s + \omega_n^2}$$

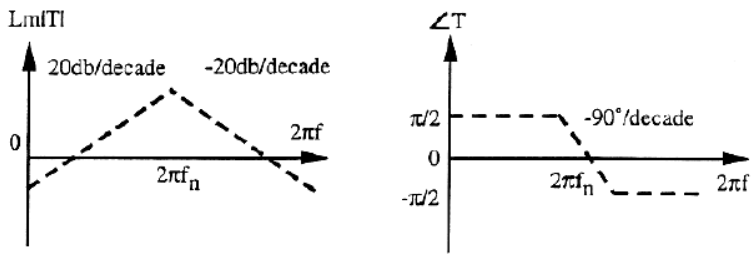

$$T(s) = \frac{s^2}{s^2 + 2\zeta\omega_n s + \omega_n^2}$$

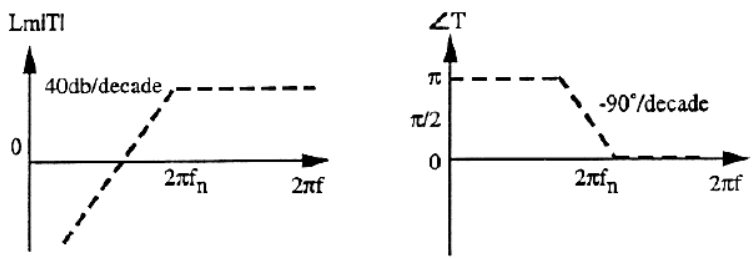

ECG Amplifier

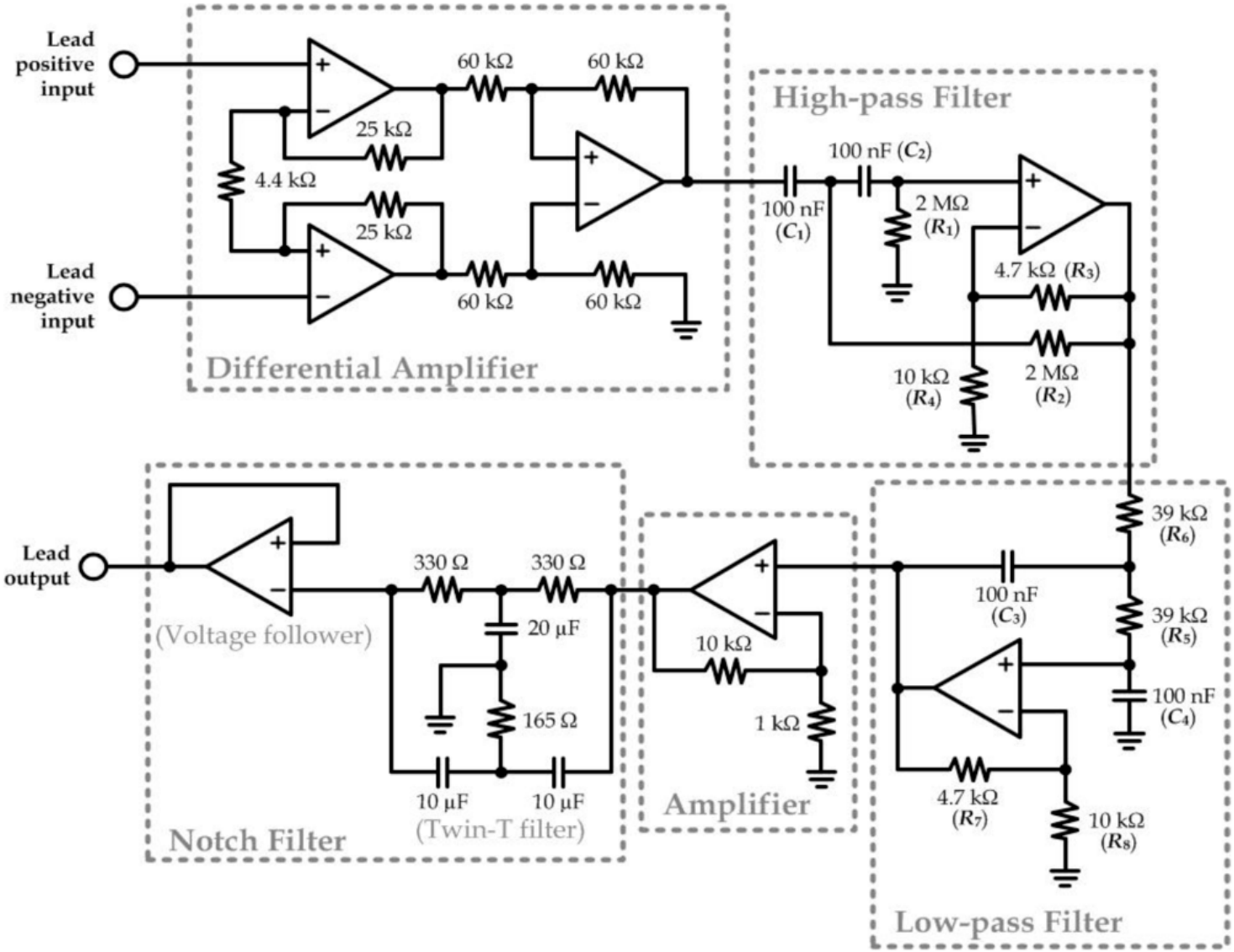

ECG Amplifier

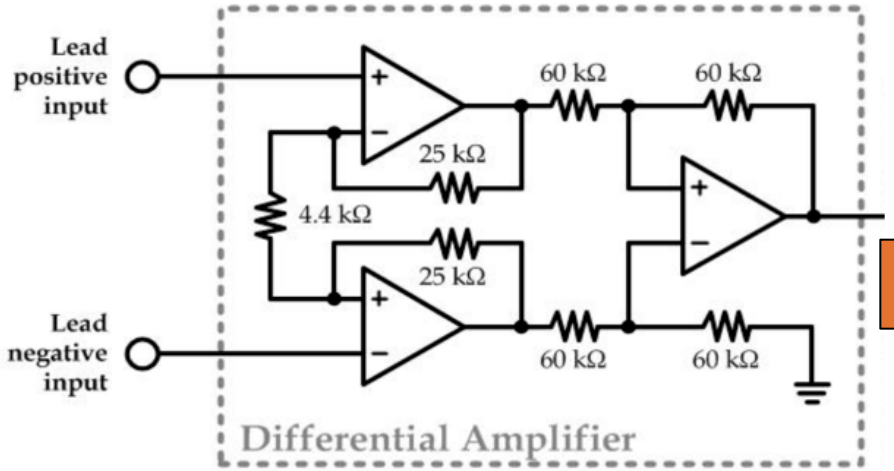

Gv=12.36

Gv=11

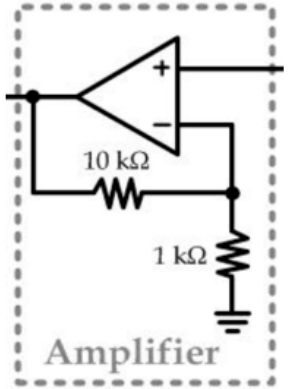

ECG Amplifier: HPF

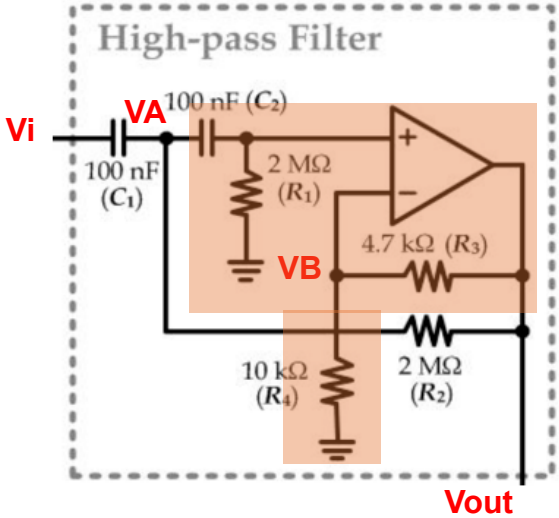

(Vi-VA)jCw+(Vout/1.5-VA)jCw+(Vout-VA)/2M=0 ➔

VA=[Vout(1/2M+jCw/1.5)+VijCw]/(2jCw+1/2M) = [Vout(1+j0.13w)+0.2jwVi]/[0.4jw+1]=VA➔

VA.2M/(2M+1/jCw)=Vout/1.5 ➔VA=Vout (0.2jw+1)/0.3jw

Vout (0.2jw+1)/0.3jw = [Vout(1+j0.13w)+0.2jwVi]/[0.4jw+1]

Vout [(0.2jw+1)/0.3jw-(0.13jw+1)/(0.4jw+1)]= 0.2jwVi/[0.4jw+1]

Vout (0.2jw+1)(1+0.7jw)/0.3jw(0.4jw+1)]=0.2jwVi/[0.4jw+1]

Vout $(1-0.1jw-0.12w^2)/0.3jw=0.2jwVi$ ➔

$[Vout/Vi] = 0.06w^2/\sqrt{[(1-0.041w^2)^2+(0.73w)^2]}$

$Vout/Vi=0.06S^2 / (1-0.1S+0.12S^2)$

$$H(\omega) = \frac{\omega_n^2}{-\omega^2 + 2\zeta\omega_n j\omega + \omega_n^2} = \frac{1}{1 - (\frac{\omega}{\omega_n})^2 + j2\zeta(\frac{\omega}{\omega_n})}$$

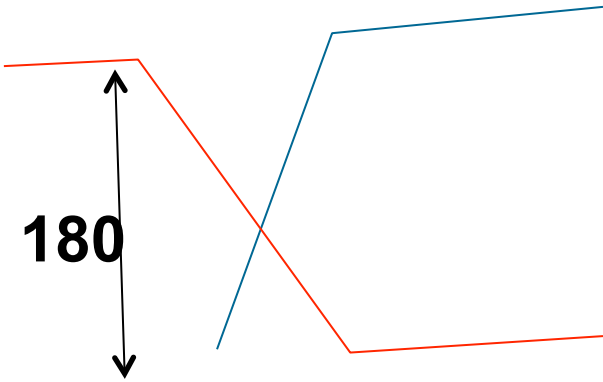

ECG Amplifier

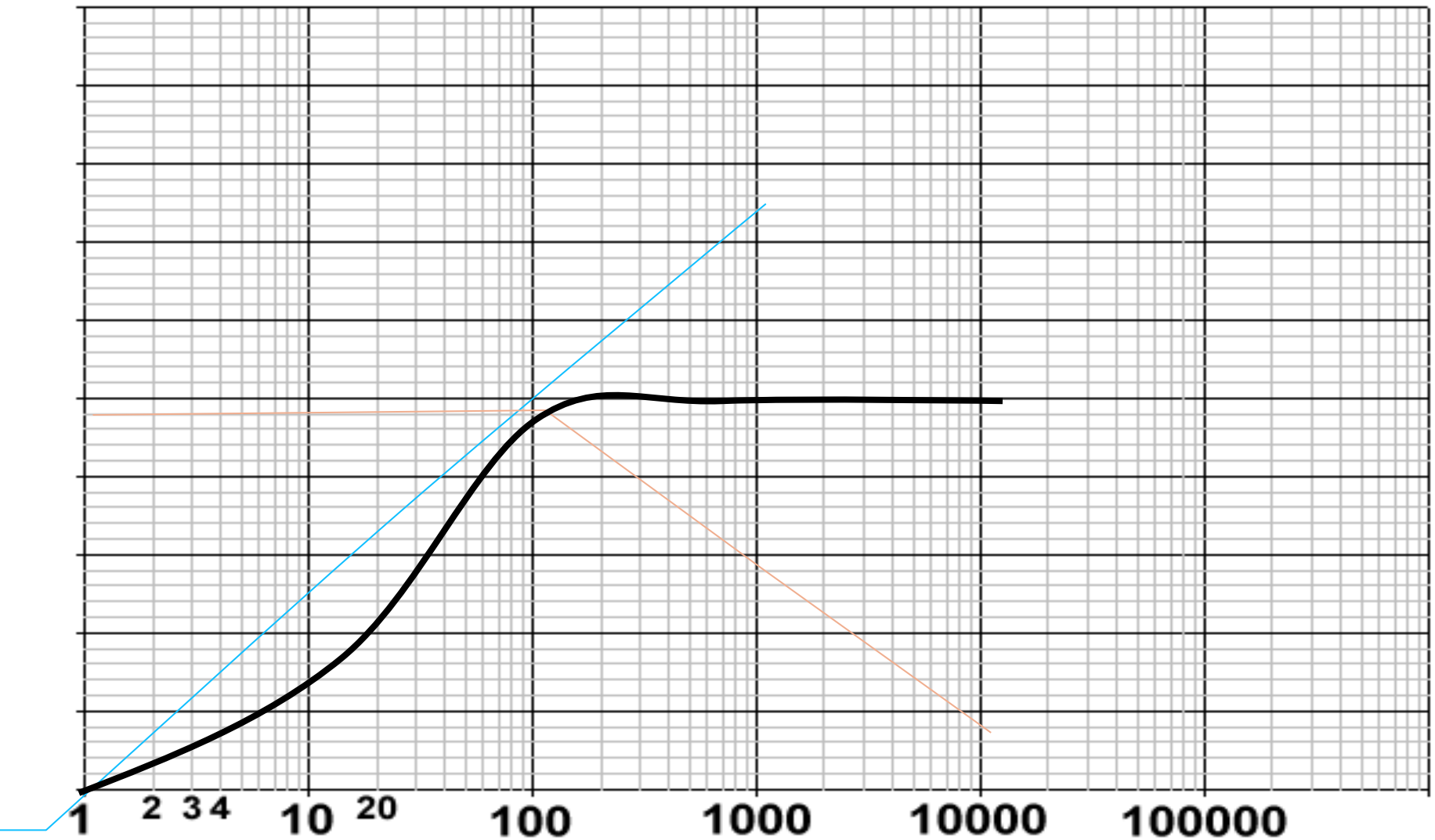

LPF

(Vi-VA)/R+(Vout/1.5-VA)/R+(Vout-VA)jCw=0 ➔

VA=[Vout(1/1.5R+jCw)+Vi/R]/(jCw+2/R)

Vout (RCwj+1)

[Vout(1/1.5R+jCw)+Vi/R]/(jCw+2/R) = Vout (RCwj+1)

Vout [(1.5RCwj+1)/(jRCw+2).1.5-(jRCw+1)]=Vi/(jRcw+2)

Vout/Vi= 1.5[(jRCw+2).1.5-(jRCw+1)]/[(1.5RCwj+1) (jRcw+2)]

H = 1.5 [0.5jRCw+2]/[-1.5(RCw)^2+4jRCw+2]

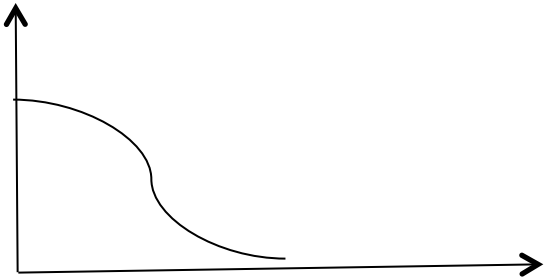

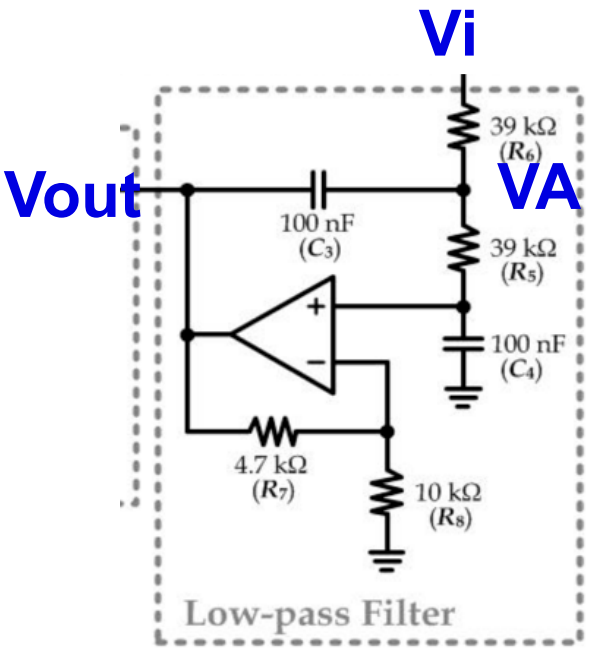

LP filter

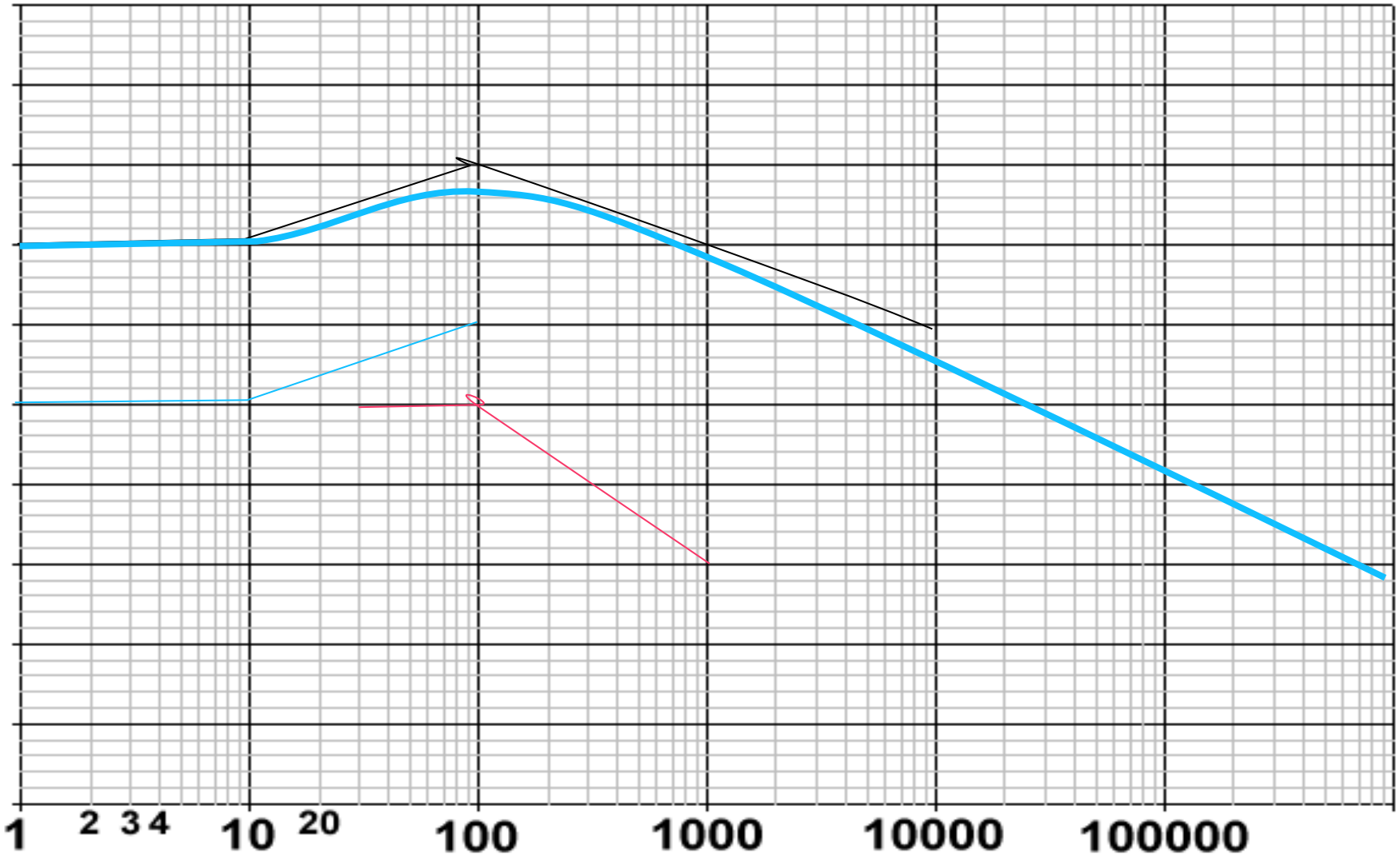

Notch Filter

(Vi-VA)/R+(Vout-VA)/R=VAjCw
Vi/R+Vout/R=VA(jCw+2/R)
(Vi+Vout)/(2+jRCw)=VA

(Vi-VB)jCw/2+(Vout-VB)jCw/2=2VB/R
(Vi+Vout)jCw/2=VB(jCw/2+2/R)
(Vi+Vout)jRCw/(4+jRCw)=VB

(4+jRCw)/jRCw(2+jRCw)=VA/VB

(Vout-VB)jCw+ (Vout-VA)/R=0

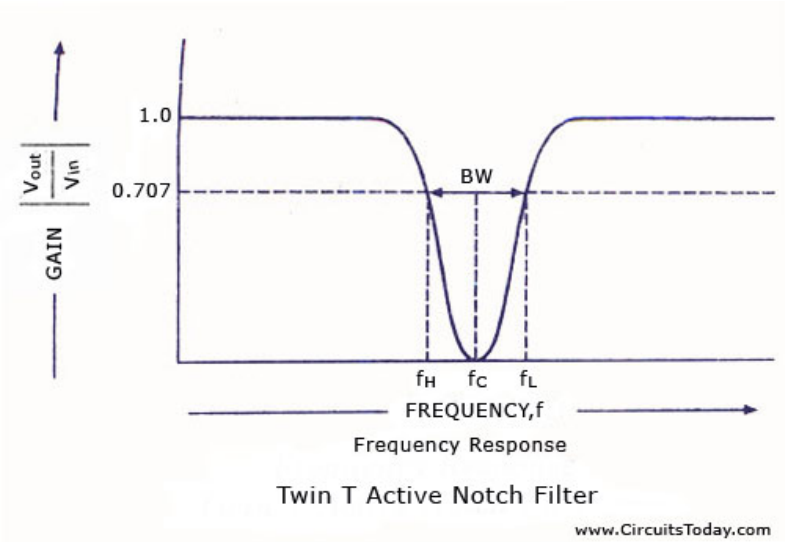

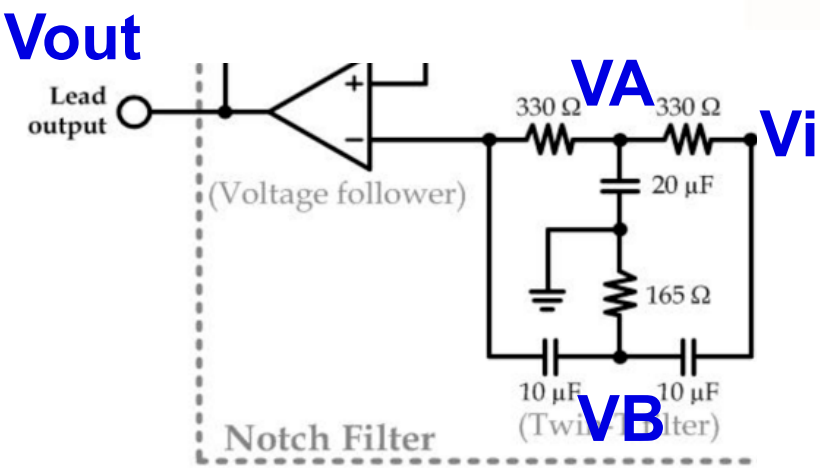

fn = Fc = 2∏RC

Notch filter

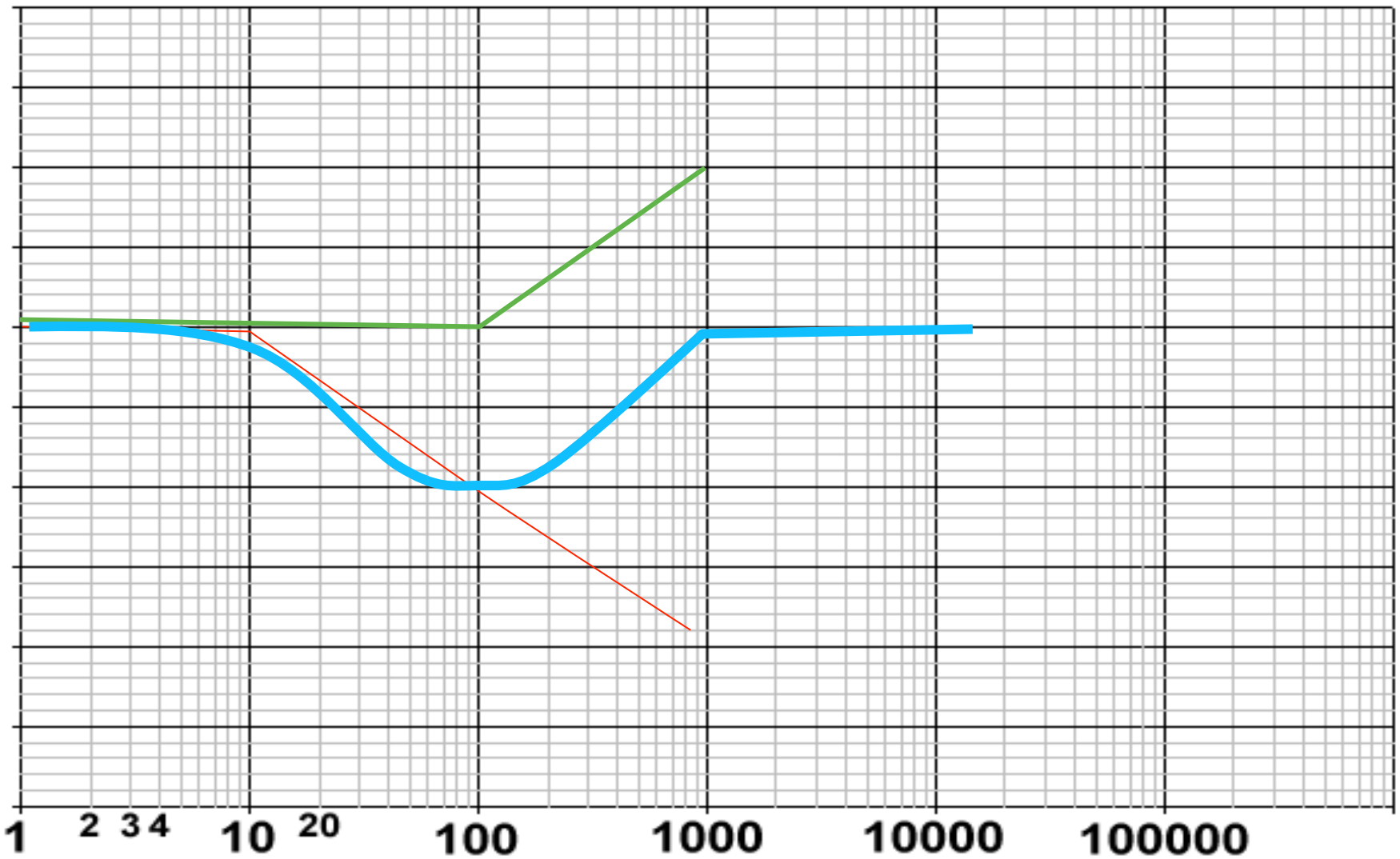

Summary

Bode Plot
Active Filters

Thank You

EECS 4641: Medical Devices

Lecture #10: Positive Feedback

Prof. Ebrahim Ghafar-Zadeh
Department of Electrical Engineering and Computer Science
Faculty of Science and Engineering
York University

Jan. 25th, 2016

Negative/Positive Feedback

Negetive

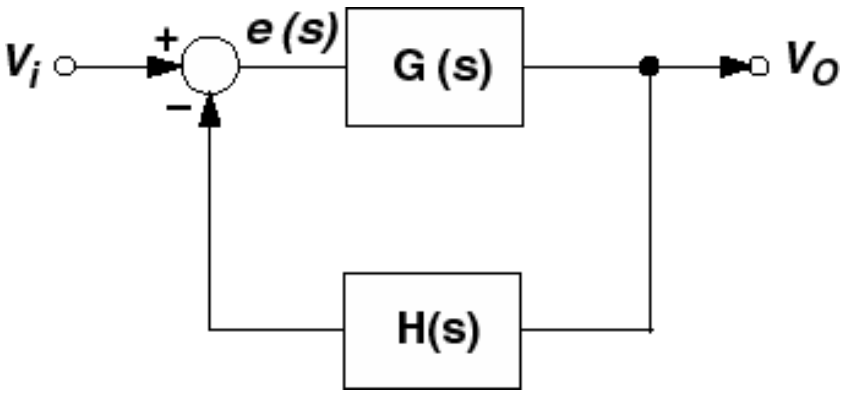

e(s)=Vi(s)-H(s).Vo(s)
Vo(s)=G(s).e(s)

==> Vo(s)/Vi(s) = G(s)/(1+H(s)G(s))

Feedback is positive Vo =Vcc or it is osilating

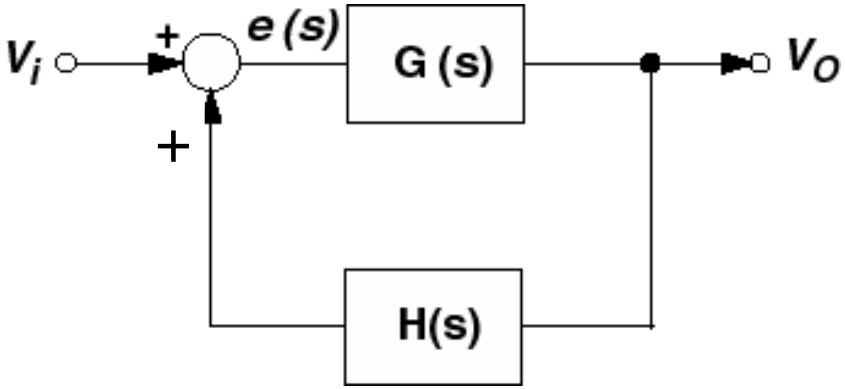

Negative Feedback

G(s)=A

H(s)= R2/(R2+R1)

Vo(s)/Vi(s)=G(s)/(1+H(s)G(s))

If A = High ==> Vo(s)/Vi(s)= 1/H(s)= 1+R2/R1

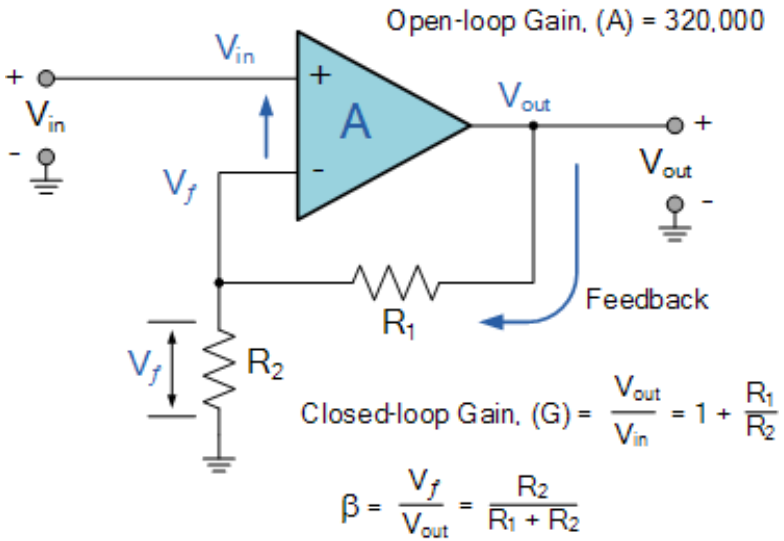

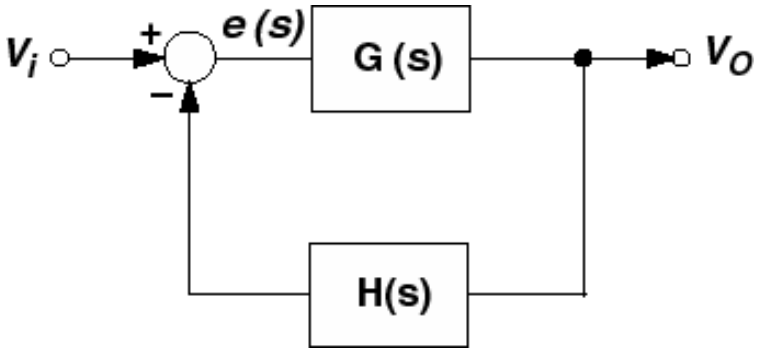

Negative Feedback

H(s)=1
G(s)=A

Vo(s)/Vi(s)=1/H(s)=1

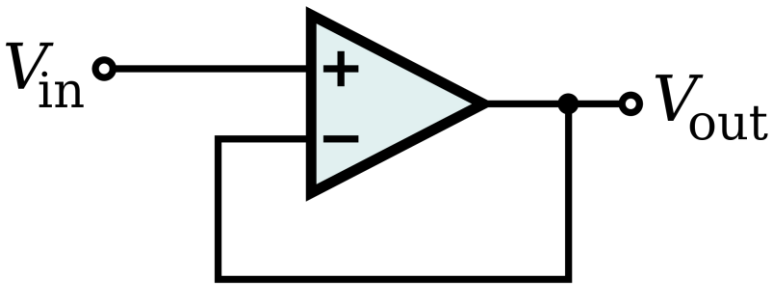

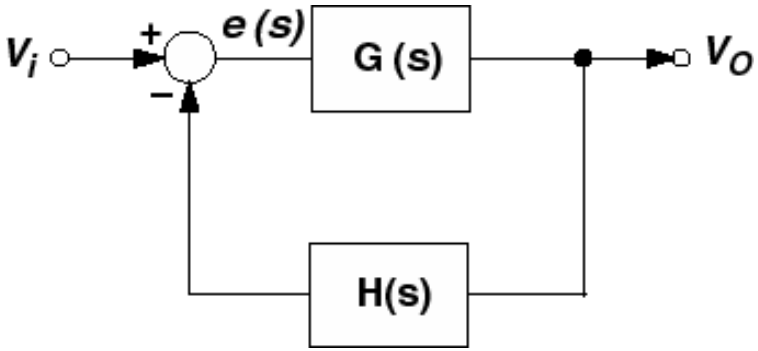

Negative Feedback

G(s)=A
H(s)=R1/[R1+R2/(R2CS+1)]

Vo(s)/Vi(s)=G(s)/(1+G(s)H(s))

= A/(1+AH(s))

if A = High ==> Vo(s)/Vi(s)=1/H(s)

Vo(s)/.Vi(s)=1+R2/[R1(R2CS+1)]

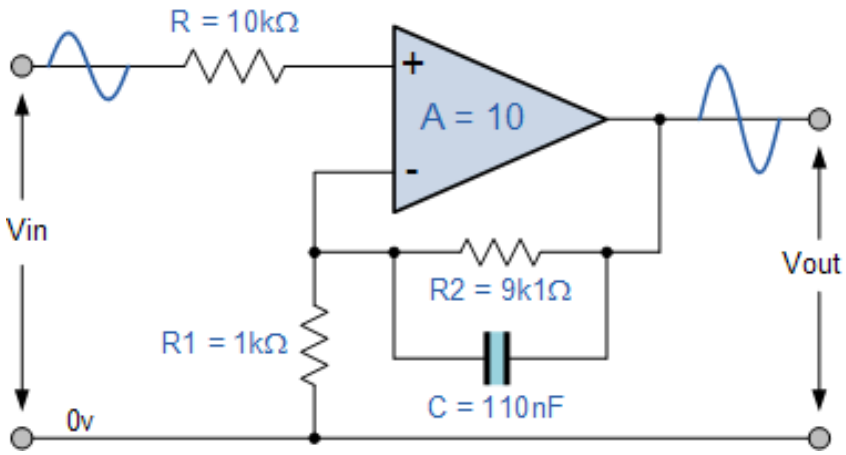

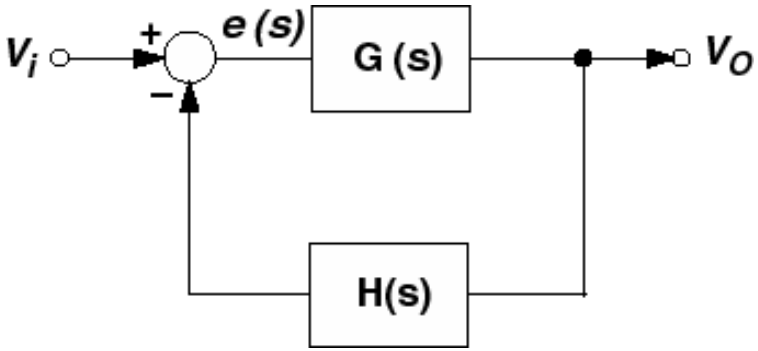

Positive Feedback

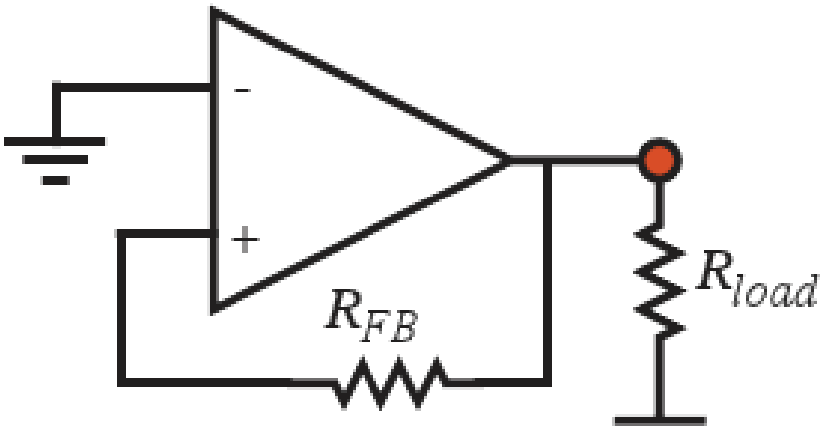

Positive Feedback

Negative Feedback

Let us assume Vc=0 ==> Feedback is positive ==> Vout=Vcc ==> C is charged and by knoiwing that Vcc=10 then :

Vc(t)= 10(1-e[t/RC])

When Vc(t) =V- is higher to V+ then V- - V+>0 then Vout=-Vee [=0]

By knowing that V+= [R2/(R2+R1)].Vcc and Vcc=10 then V+ = 4.62

Therefore, Vc(t)= 4.62e[-t/RC]

When V- - V+<0 then Vout=Vcc=10

Therefore Vc(t) and Vout can be seen as follows.

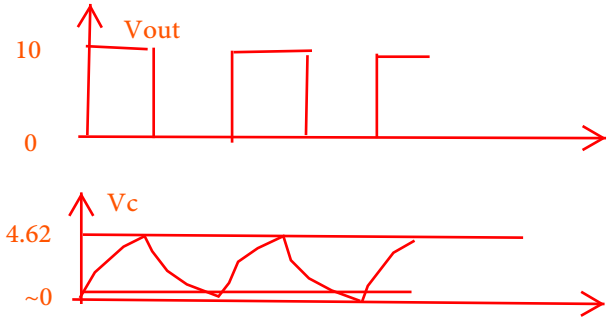

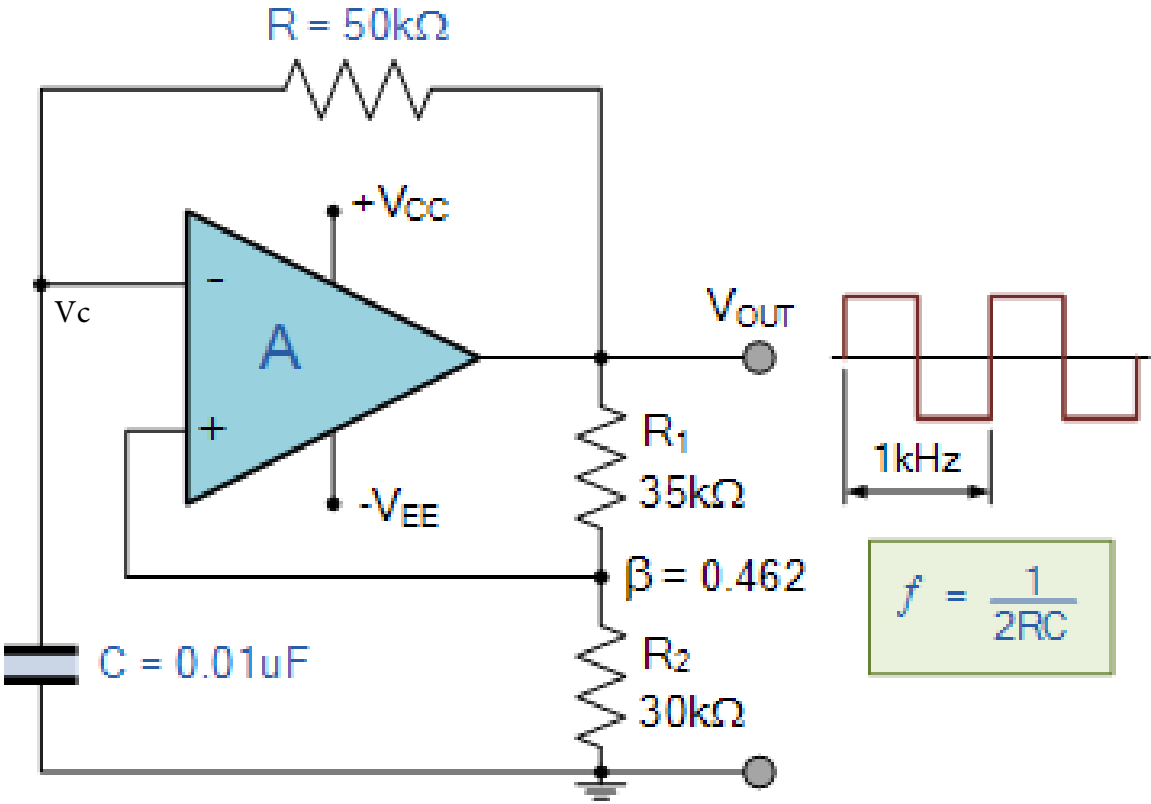

Negative Feedback

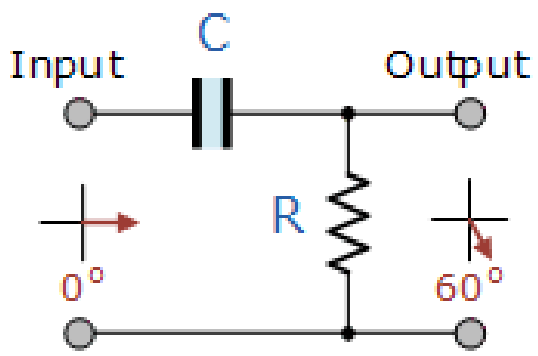

H(s)= RCS/(RCS+1) ==> Angle H(s)= Arc tang (RCw)

R, C and w can be so selected that Angle of H(s) = 60 degree

Negative Feedback

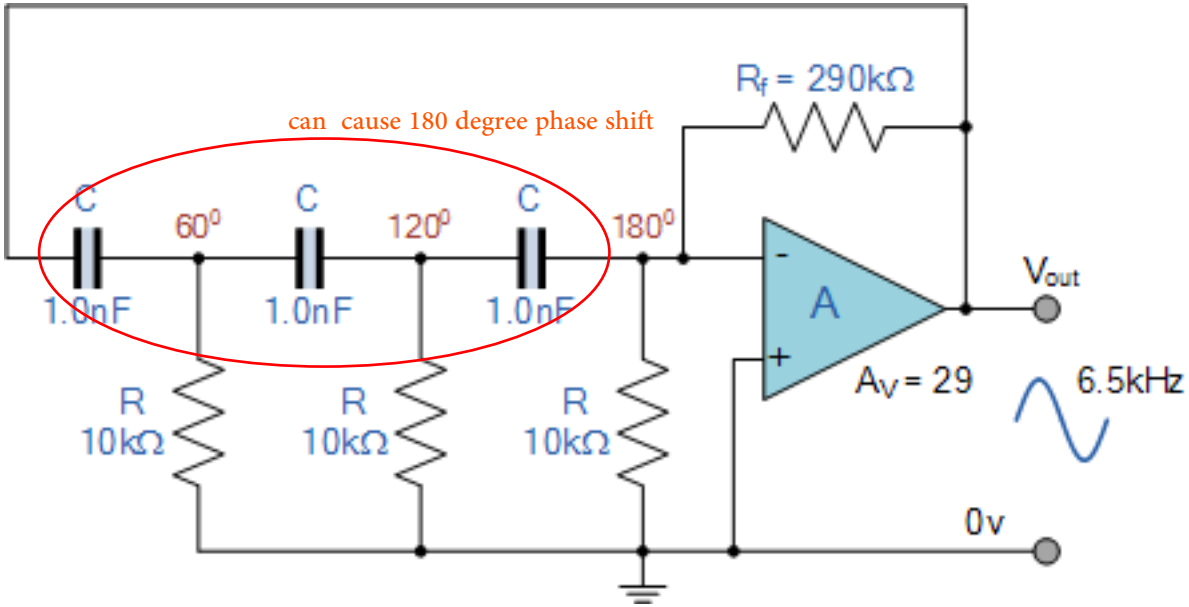

$$f_r = \frac{1}{2\pi RC\sqrt{2N}}$$

The total frequency is obtained from this relationship when N=3

Negative Feedback

H2(s)= 1+1/RCS]=[1+R1CS]/R1CS

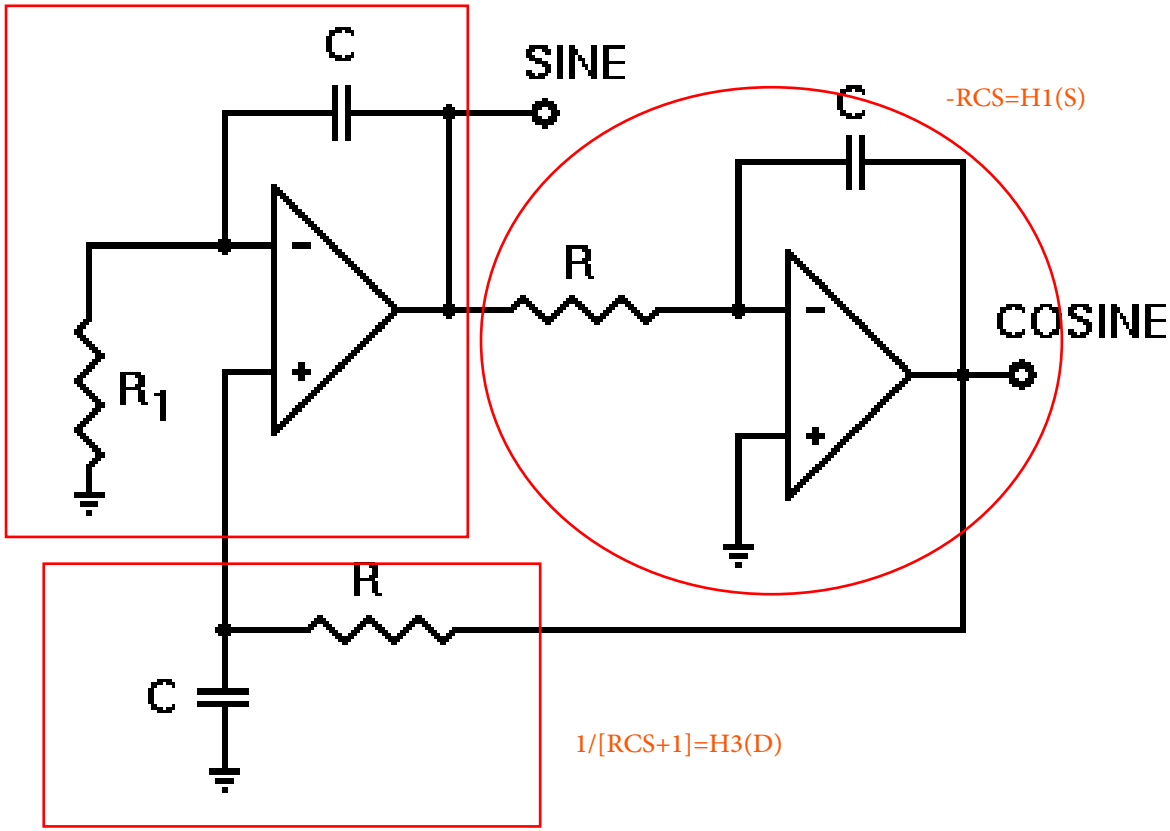

H1H2H3(s)= -RCS . [(1+R1CS)/RCS] . [1/(RCS+1)]=-1 If R1=R then the feedback is negative.

Negative Feedback

Feedback is positive

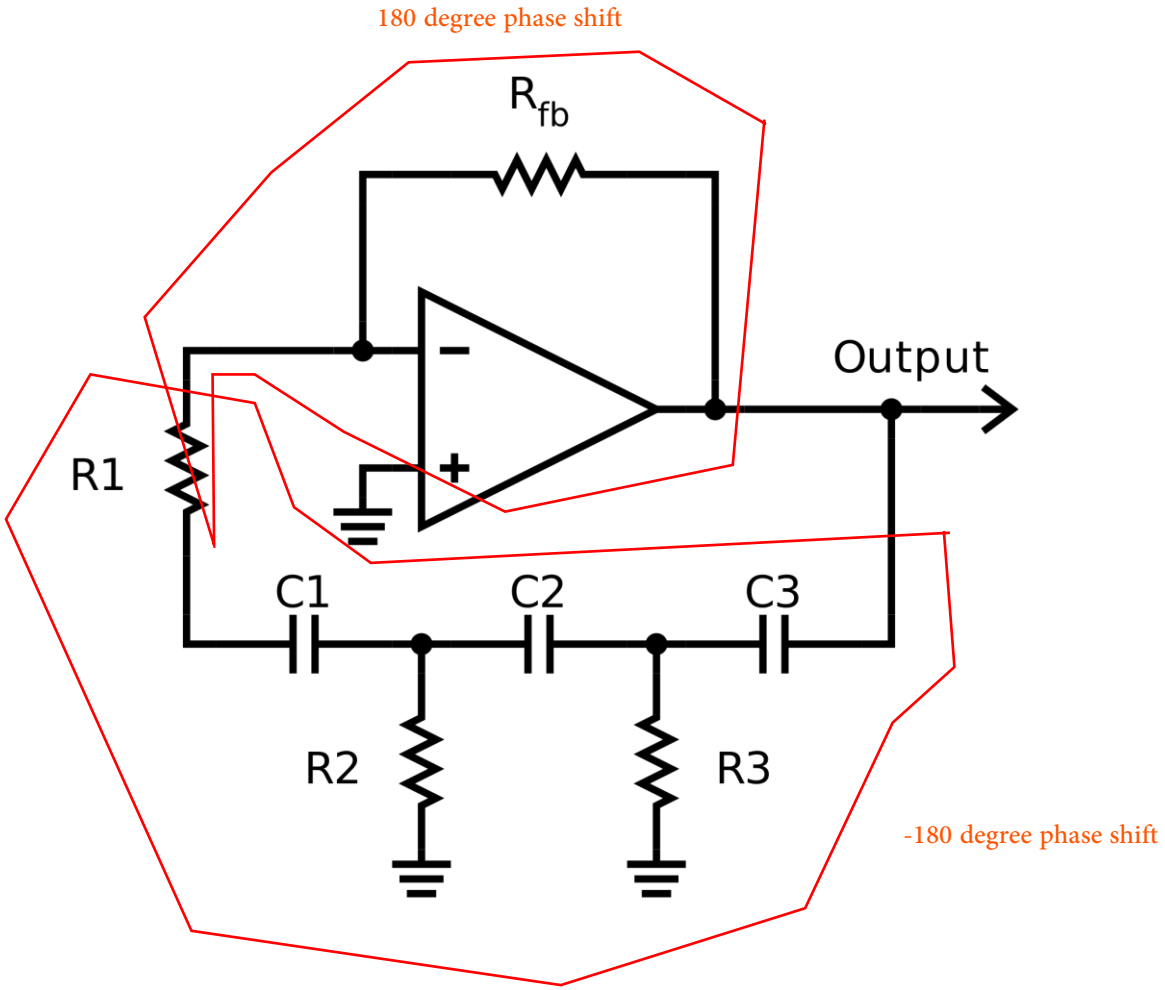

Negative Feedback

IC 555

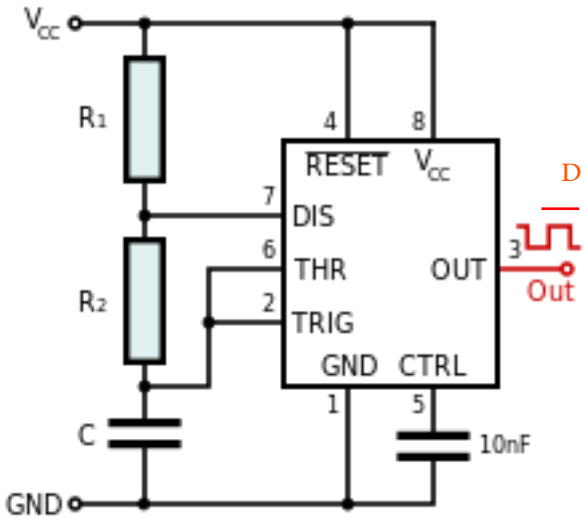

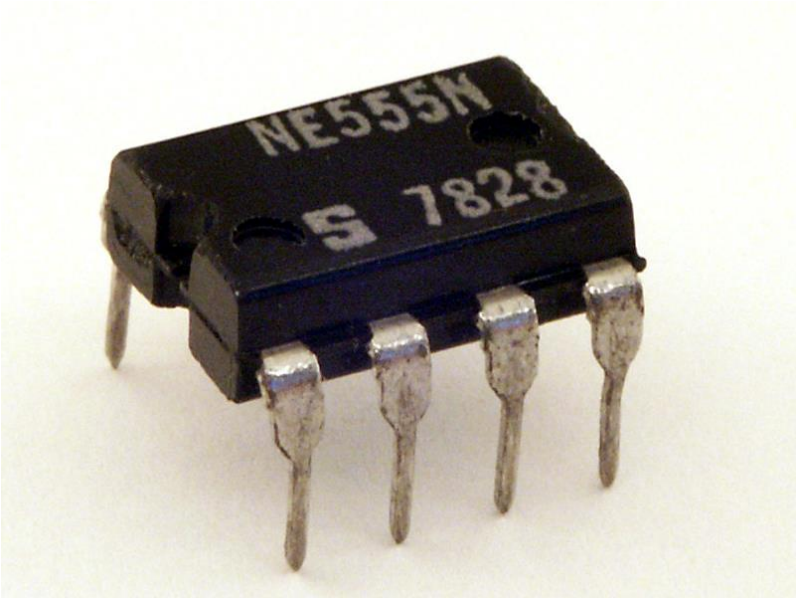

The output pulse width D is equal to Ln(3).RC=1.1RC

The frequncy of output is equal to :
f= 1/(ln(2).C.(R1+2R2))

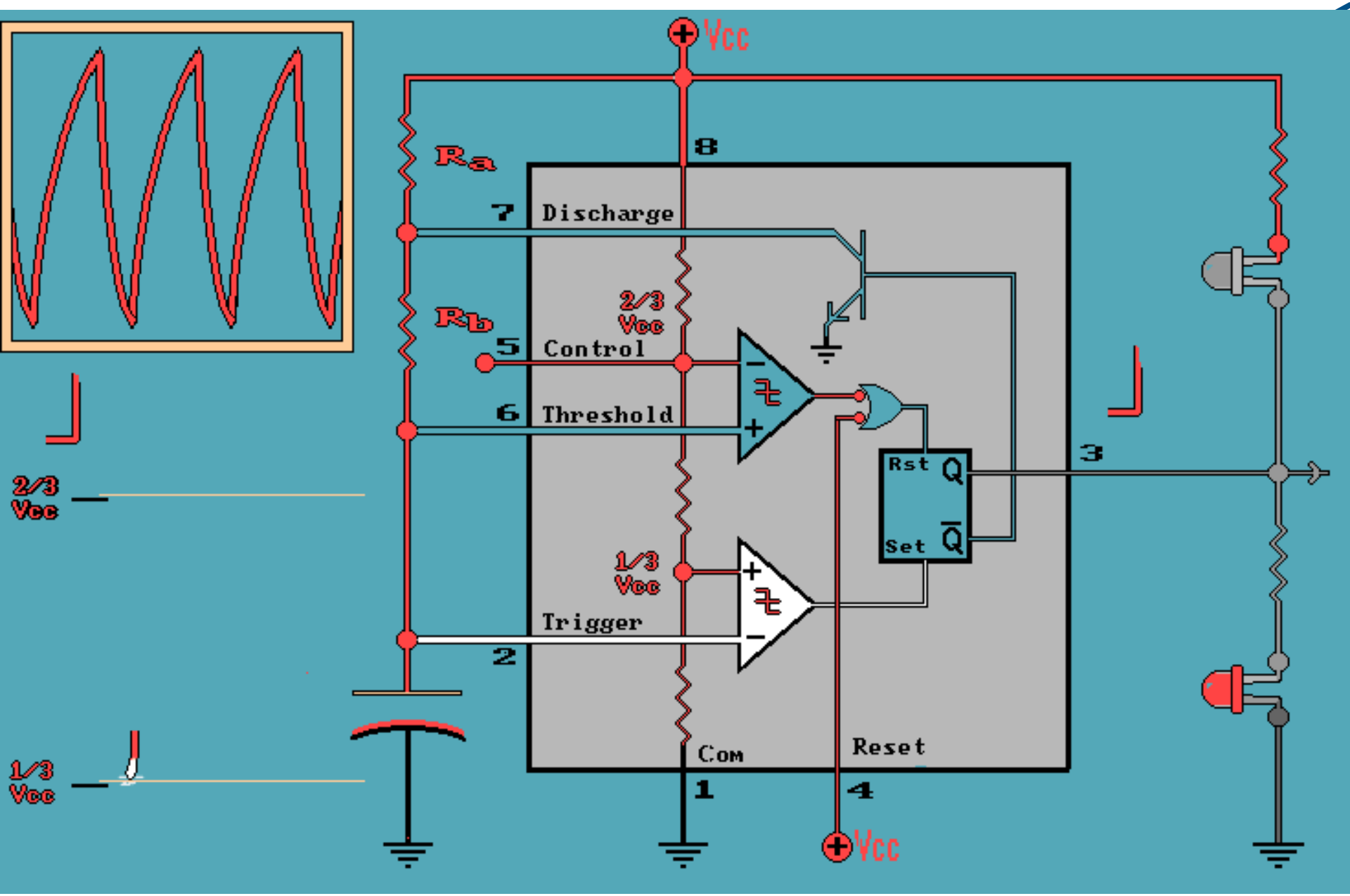
Vcc
8
Ra
7
Discharge
2/3
Vcc
Rb
5
Control
6
Threshold
Rst
Q
3
Set
Q̄
2/3
Vcc
1/3
Vcc
Trigger
2
1/3
Vcc
Com
Reset
1
4
Vcc

Summary

- Positive Feedback
- Negative Feedback

Thank You

EECS 4641: Medical Devices

Lecture #11: Labs 7-10

Prof. Ebrahim Ghafar-Zadeh
Department of Electrical Engineering and Computer Science
Faculty of Science and Engineering
York University

Feb. 8th, 2016

YORK UNIVERSITÉ UNIVERSITY

Osilator

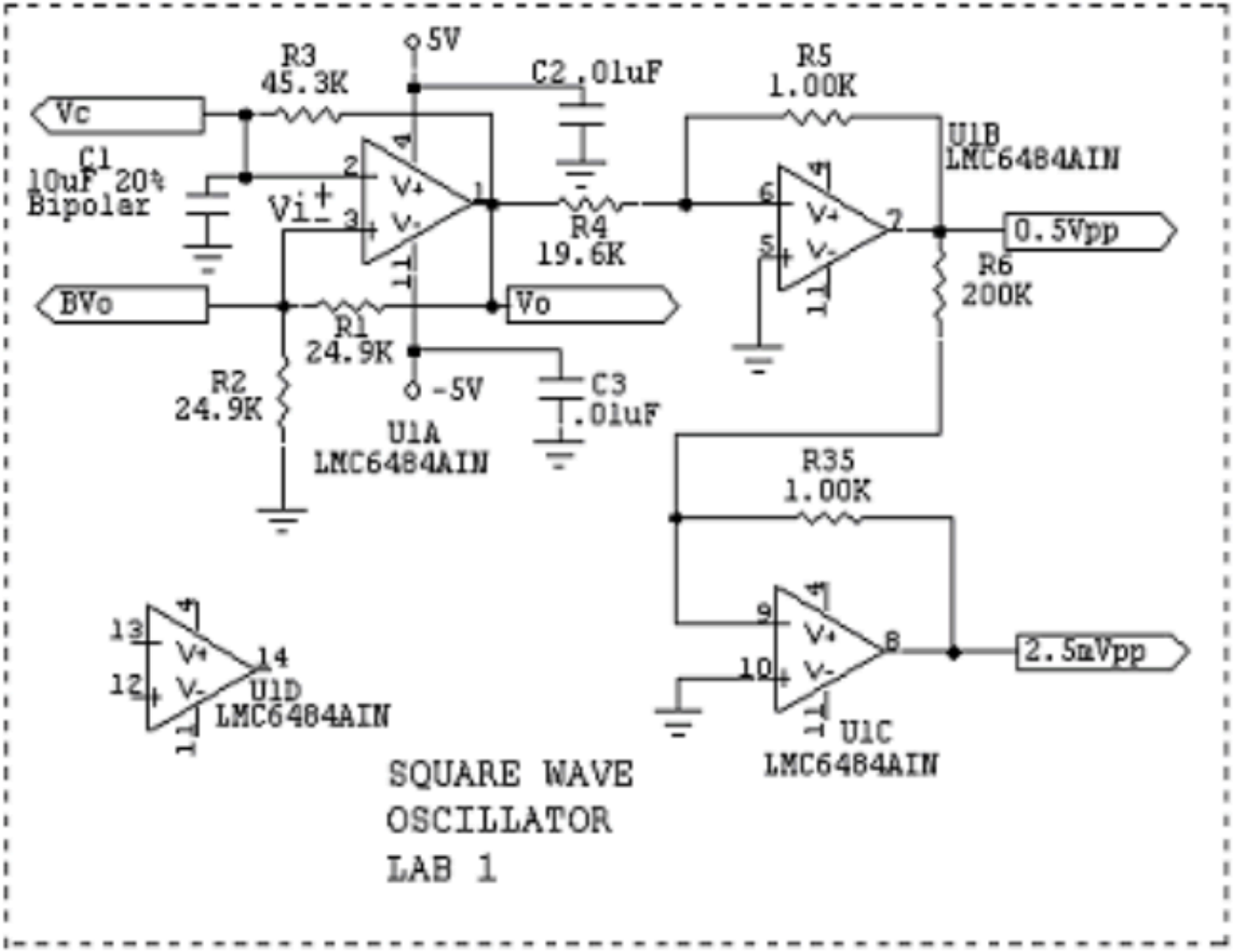
5V
R3
45.3K
C2 .01uF
R5
1.00K
Vc
C1
10uF 20%
Bipolar
Vi+
Vi-
U1B
LMC6484AIN
R4
19.6K
0.5Vpp
R6
200K
BVo
Vo
R1
24.9K
R2
24.9K
-5V
C3
.01uF
U1A
LMC6484AIN
R35
1.00K
2.5mVpp
U1D
LMC6484AIN
U1C
LMC6484AIN
SQUARE WAVE
OSCILLATOR
LAB 1

Amplifier

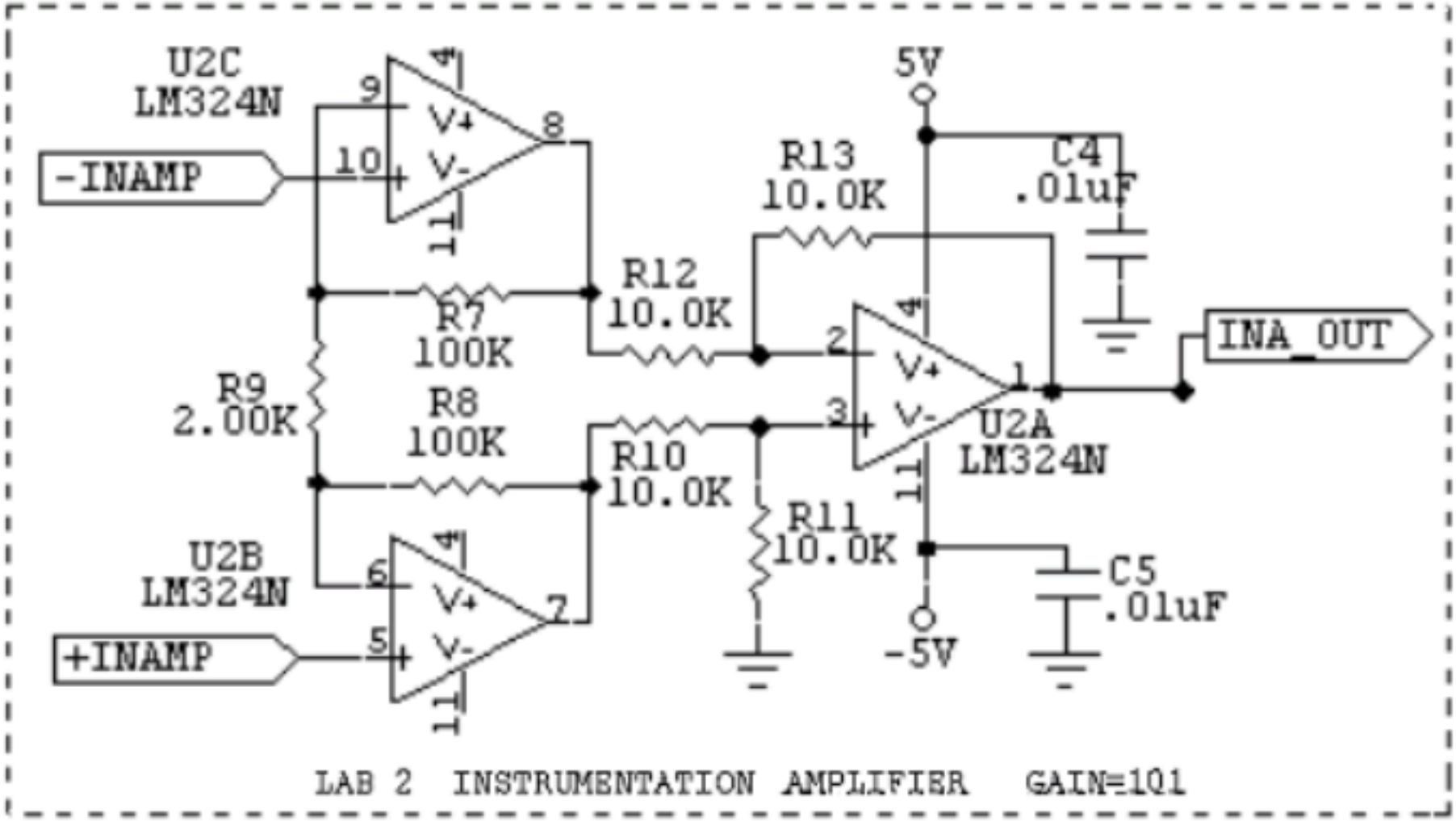
U2C
LM324N
-INAMP
+INAMP
U2B
LM324N
R7
100K
R8
100K
R9
2.00K
R10
10.0K
R11
10.0K
R12
10.0K
R13
10.0K
C4
.01uF
C5
.01uF
5V
-5V
U2A
LM324N
INA_OUT
LAB 2 INSTRUMENTATION AMPLIFIER GAIN=101

Filter 1

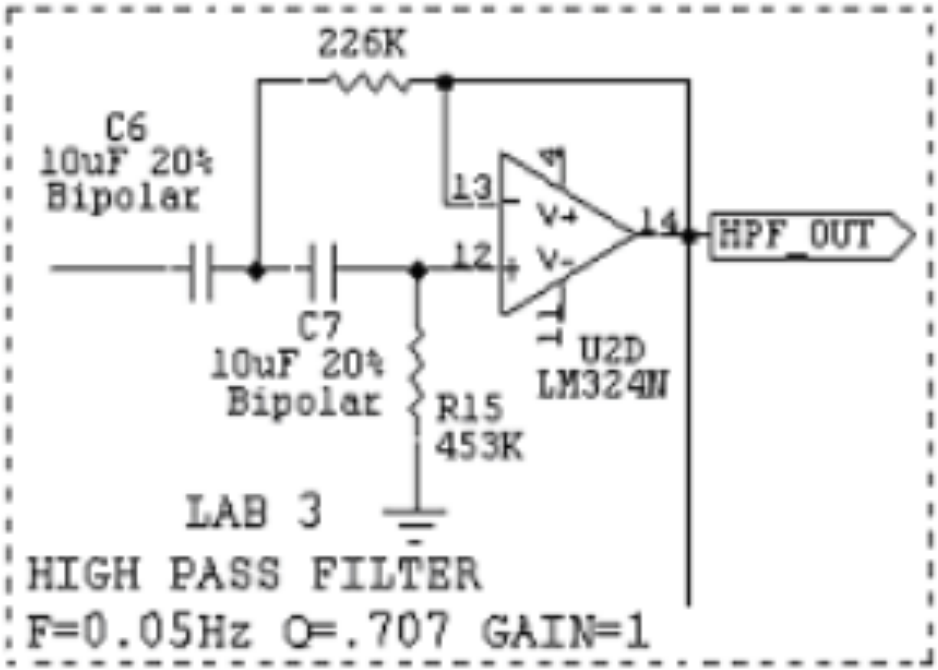
226K
C6
10uF 20%
Bipolar
13
12
V+
V-
14
HPF_OUT
C7
10uF 20%
Bipolar
R15
453K
U2D
LM324N
LAB 3
HIGH PASS FILTER
F=0.05Hz Q=.707 GAIN=1

Filter 2

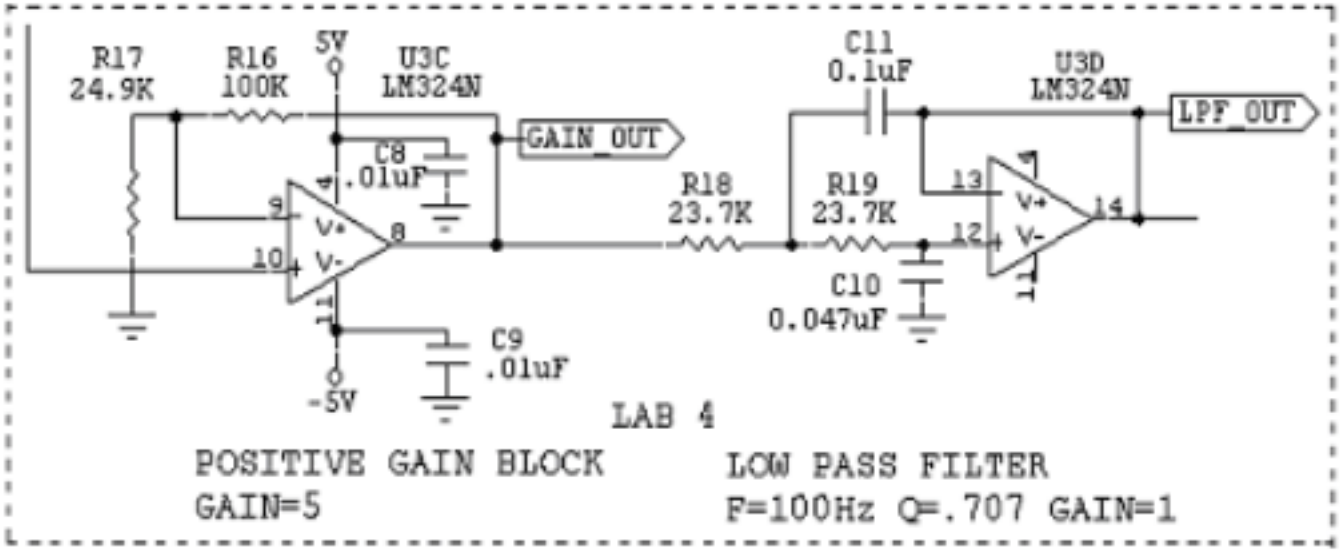
R17
24.9K
R16
100K
5V
U3C
LM324N
C8
.01uF
GAIN_OUT
C11
0.1uF
U3D
LM324N
LPF_OUT
R18
23.7K
R19
23.7K
C10
0.047uF
C9
.01uF
-5V
LAB 4
POSITIVE GAIN BLOCK
GAIN=5
LOW PASS FILTER
F=100Hz Q=.707 GAIN=1

Summary

- Lab 7-10

Thank You