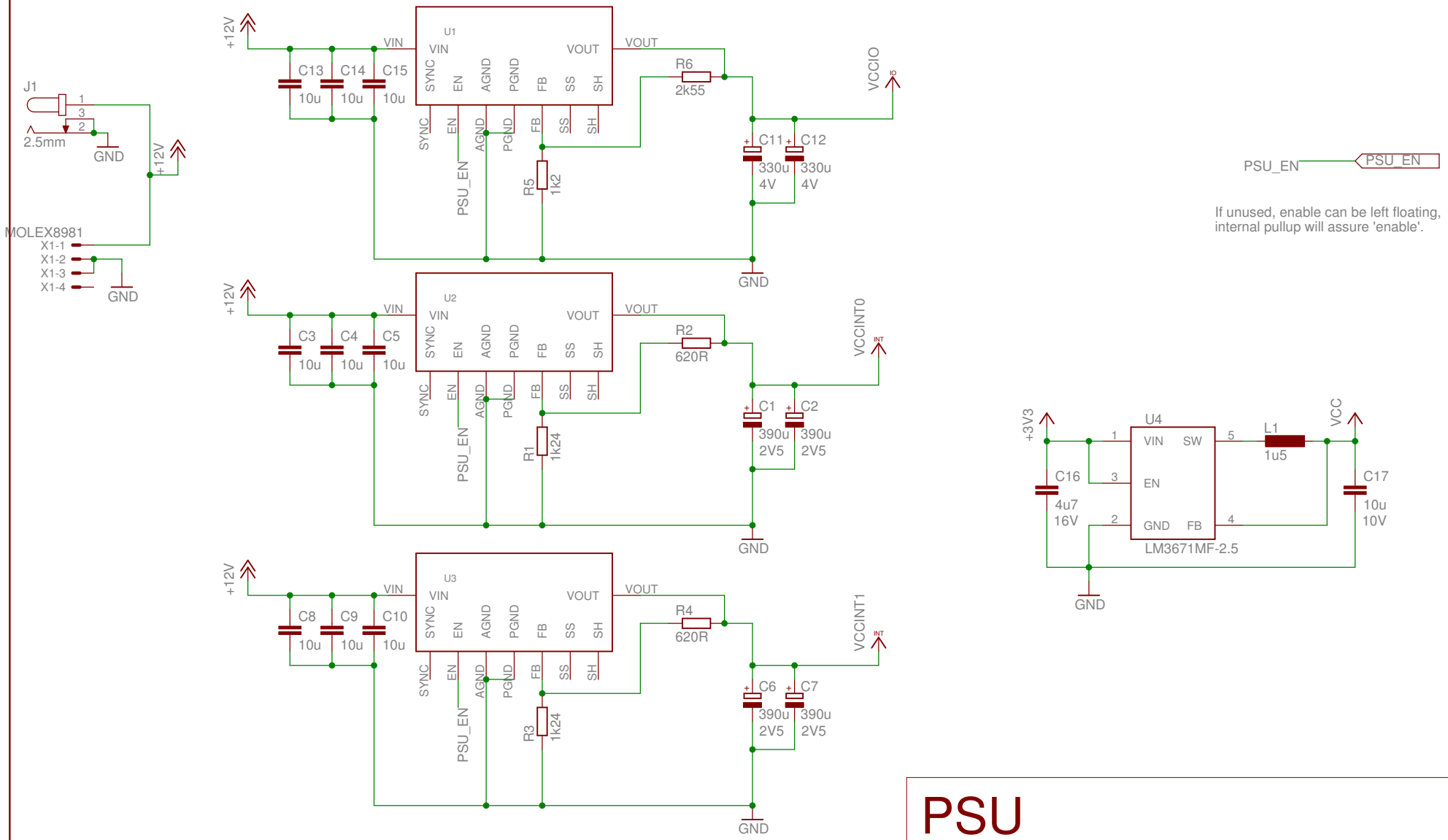

PSU

TITLE: PSU

Document Number:

REV: 0

Date: 31.07.11 17:28

Sheet: 1/1

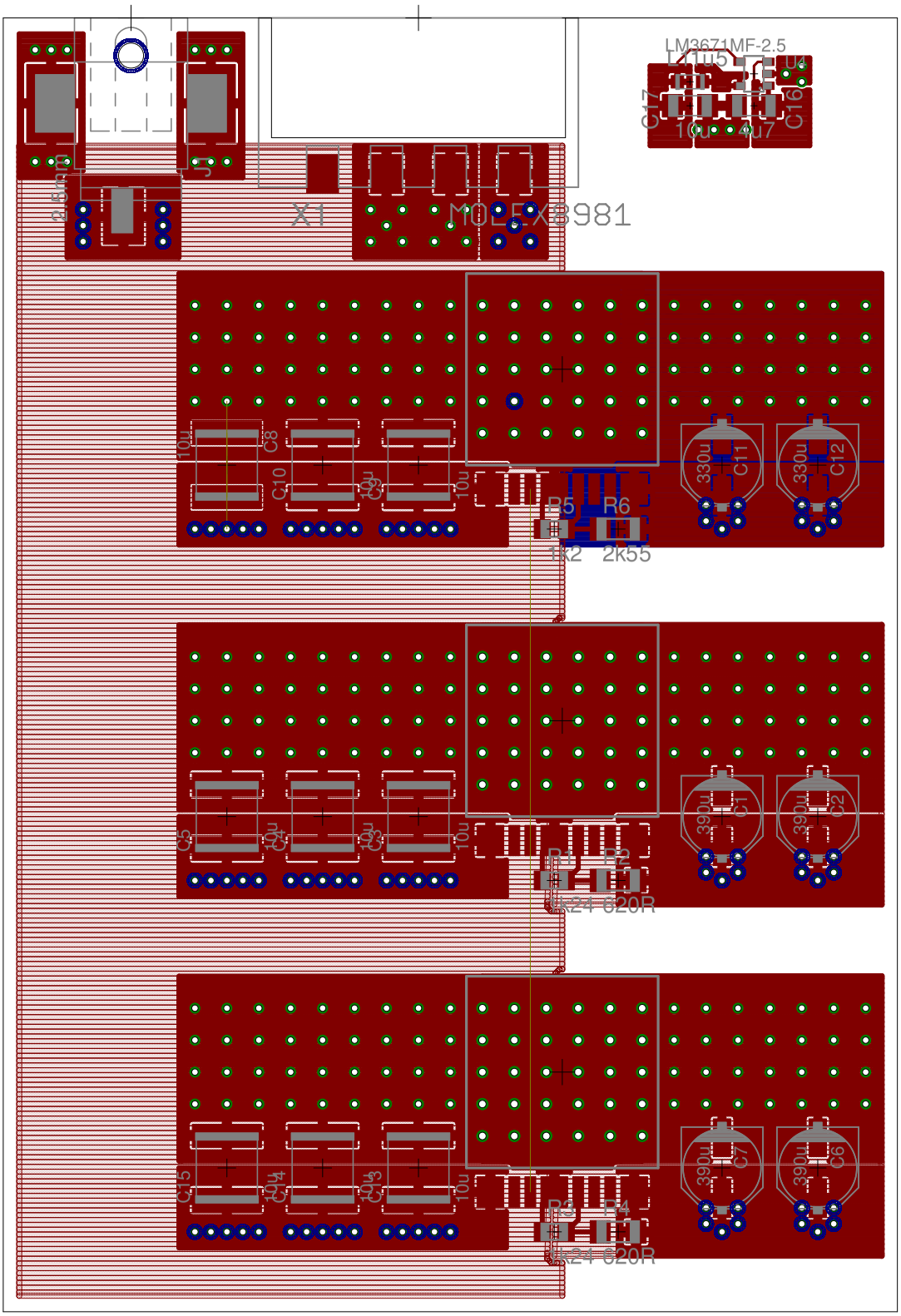
LM3671MF-2.5
L1 4u5
U4
C17
10u
4u7
C16
J1
X1
MOLEX8981
10u
C8
C10
10u
C9
10u
R5
R6
1k2
2k55
330u
C11
330u
C12
C5
10u
C4
10u
C3
10u
R1
R2
1k24
620R
390u
C1
390u
C2
C15
10u
C14
10u
C13
10u
R3
R4
1k24
620R
390u
C7
390u
C6

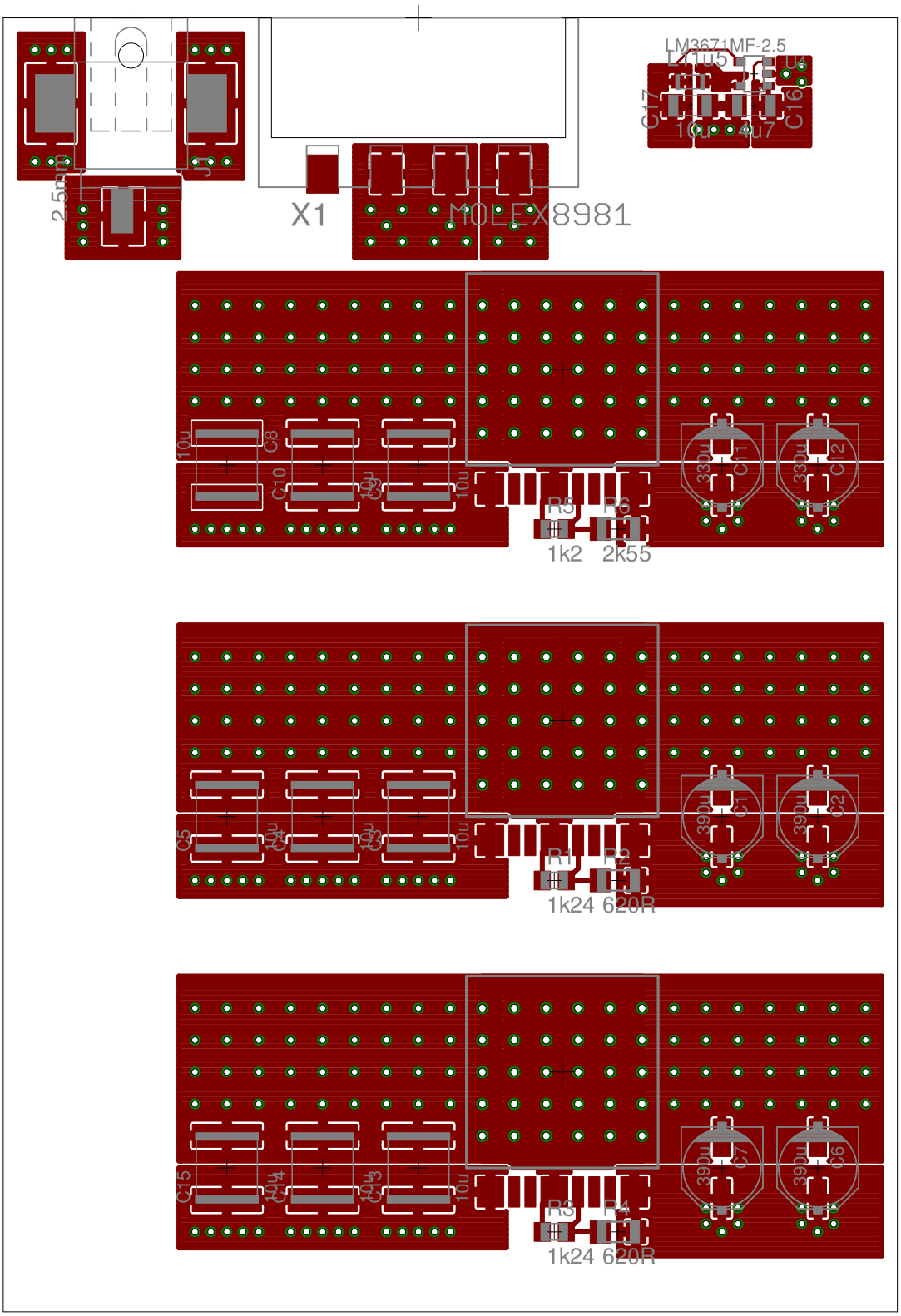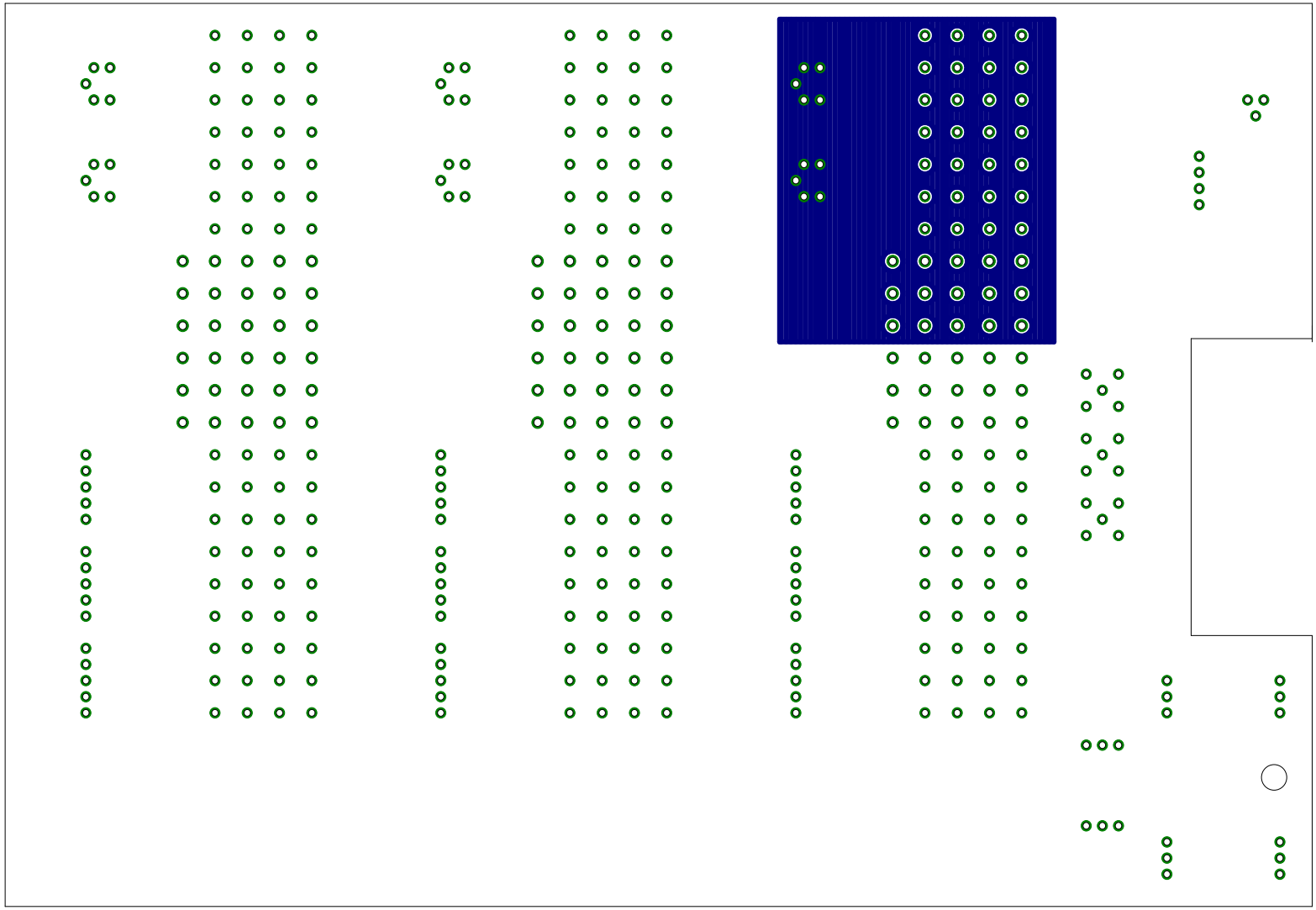
LM3671MF-2.5
L1 10u
U4
C17
C16
10u
4u7
J1
2.5mm
X1
MOLEX8981
C8
10u
C10
10u
C9
10u
10u
330u
C11
330u
C12
R5
R6
1k2
2k55
C5
10u
C4
10u
C3
10u
10u
390u
C1
390u
C2
R1
R2
1k24
620R
C15
10u
C14
10u
C13
10u
10u
390u
C7
390u
C6
R3
R4
1k24
620R