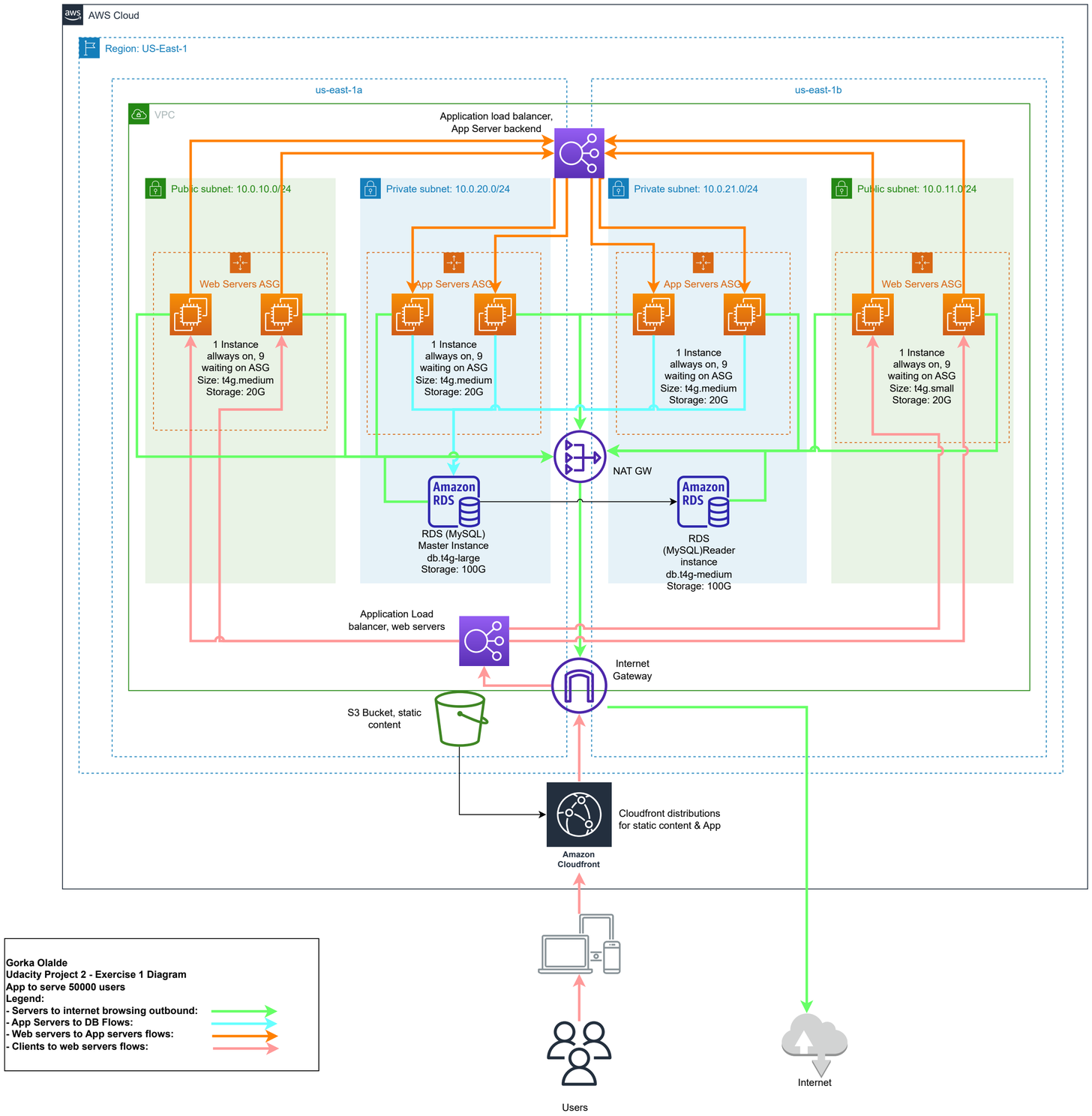

Gorka Olalde
Udacity Project 2 - Exercise 1 Diagram
App to serve 50000 users
Legend:
- Servers to internet browsing outbound:
- App Servers to DB Flows:
- Web servers to App servers flows:
- Clients to web servers flows: