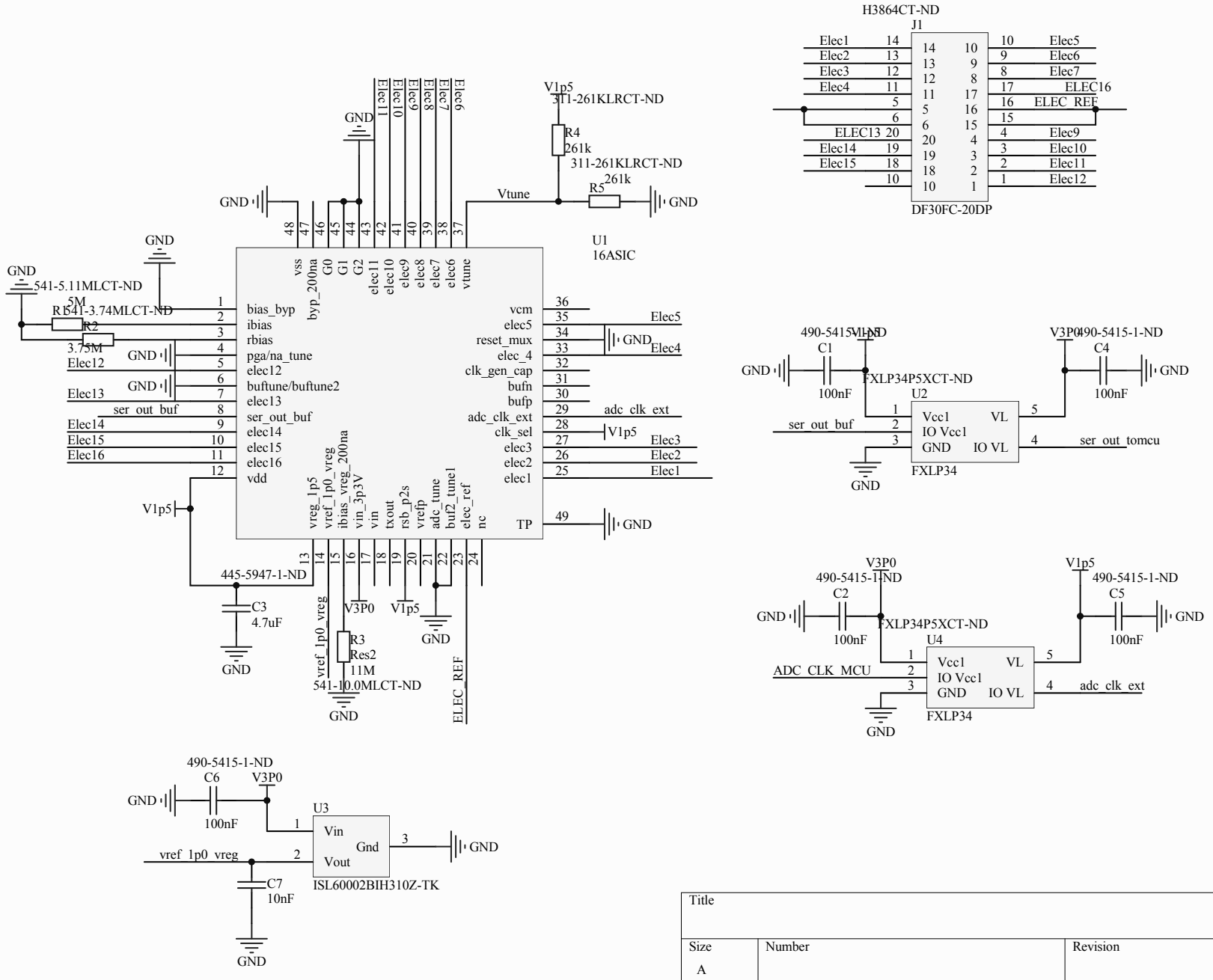

Title		
Size A	Number	Revision
Date: 7/11/2011		Sheet of
File: C:\Users\..\16ASIC.SchDoc		Drawn By: