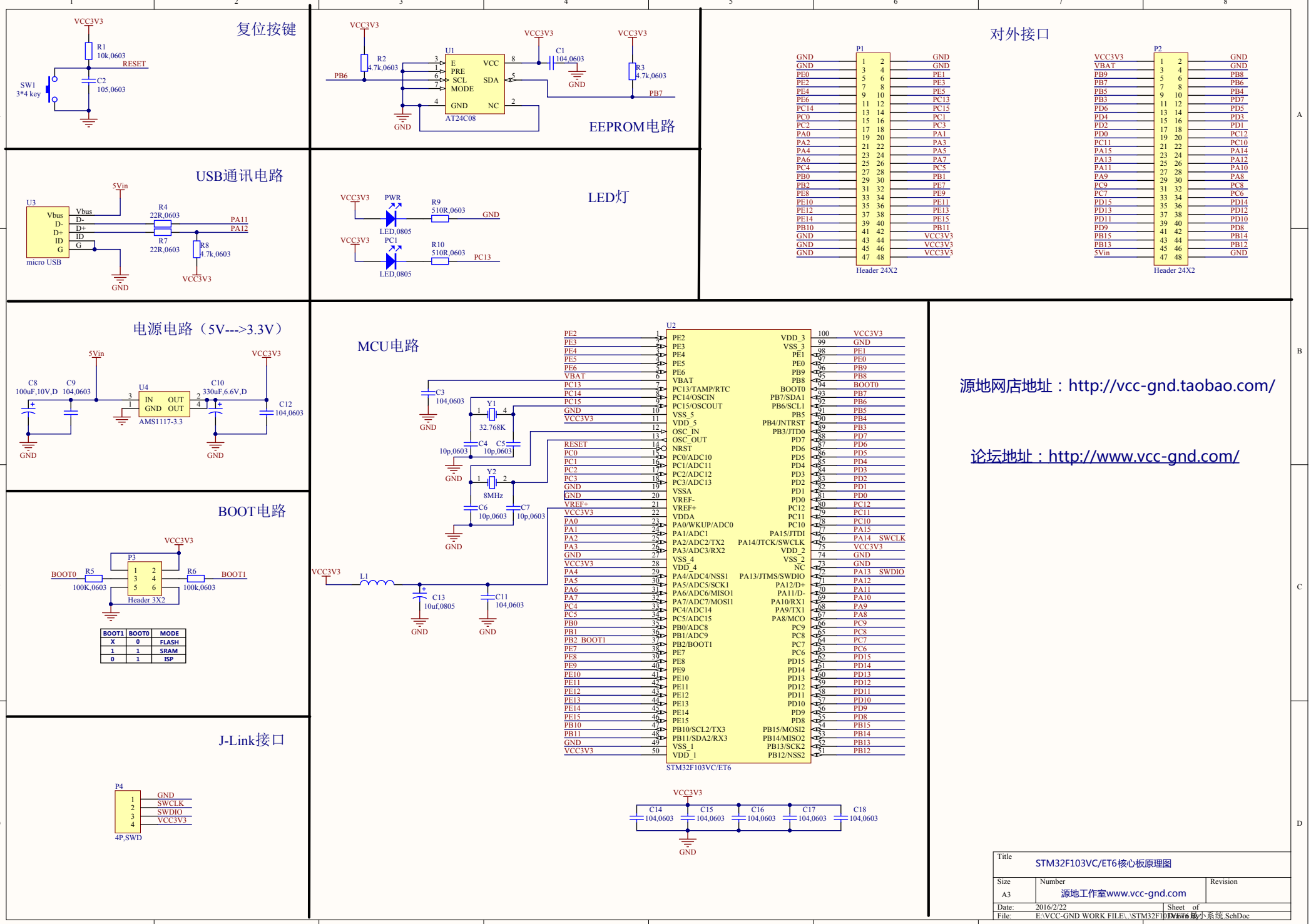
复位按键
VCC3V3
R1
10k,0603
RESET
SW1
3*4 key
C2
105,0603
EEPROM电路
U1
E
PRE
SCL
MODE
VCC
SDA
GND
NC
AT24C08
R2
4.7k,0603
PB6
C1
104,0603
R3
4.7k,0603
PB7
USB通讯电路
U3
Vbus
D-
D+
ID
G
micro USB
5Vin
R4
22R,0603
R7
22R,0603
R8
4.7k,0603
PA11
PA12
LED灯
PWR
LED,0805
R9
510R,0603
PC1
R10
510R,0603
PC13
对外接口
P1
Header 24X2
P2
Header 24X2
电源电路（5V--->3.3V）
C8
100uF,10V,D
C9
104,0603
U4
IN
OUT
GND
AMS1117-3.3
C10
330uF,6.6V,D
C12
104,0603
MCU电路
U2
STM32F103VC/ET6
C3
104,0603
Y1
32.768K
C4
10p,0603
C5
10p,0603
Y2
8MHz
C6
10p,0603
C7
10p,0603
L1
C13
10uf,0805
C11
104,0603
C14
104,0603
C15
104,0603
C16
104,0603
C17
104,0603
C18
104,0603
BOOT电路
P3
Header 3X2
BOOT0
R5
100K,0603
R6
100k,0603
BOOT1
BOOT1 BOOT0 MODE
X 0 FLASH
1 1 SRAM
0 1 ISP
J-Link接口
P4
4P,SWD
GND
SWCLK
SWDIO
VCC3V3
源地网店地址：http://vcc-gnd.taobao.com/
论坛地址：http://www.vcc-gnd.com/
Title
STM32F103VC/ET6核心板原理图
Size
A3
Number
源地工作室www.vcc-gnd.com
Revision
Date: 2016/2/22
Sheet of
File: E:\VCC-GND WORK FILE\...\STM32F103VC/ET6核心系统.SchDoc