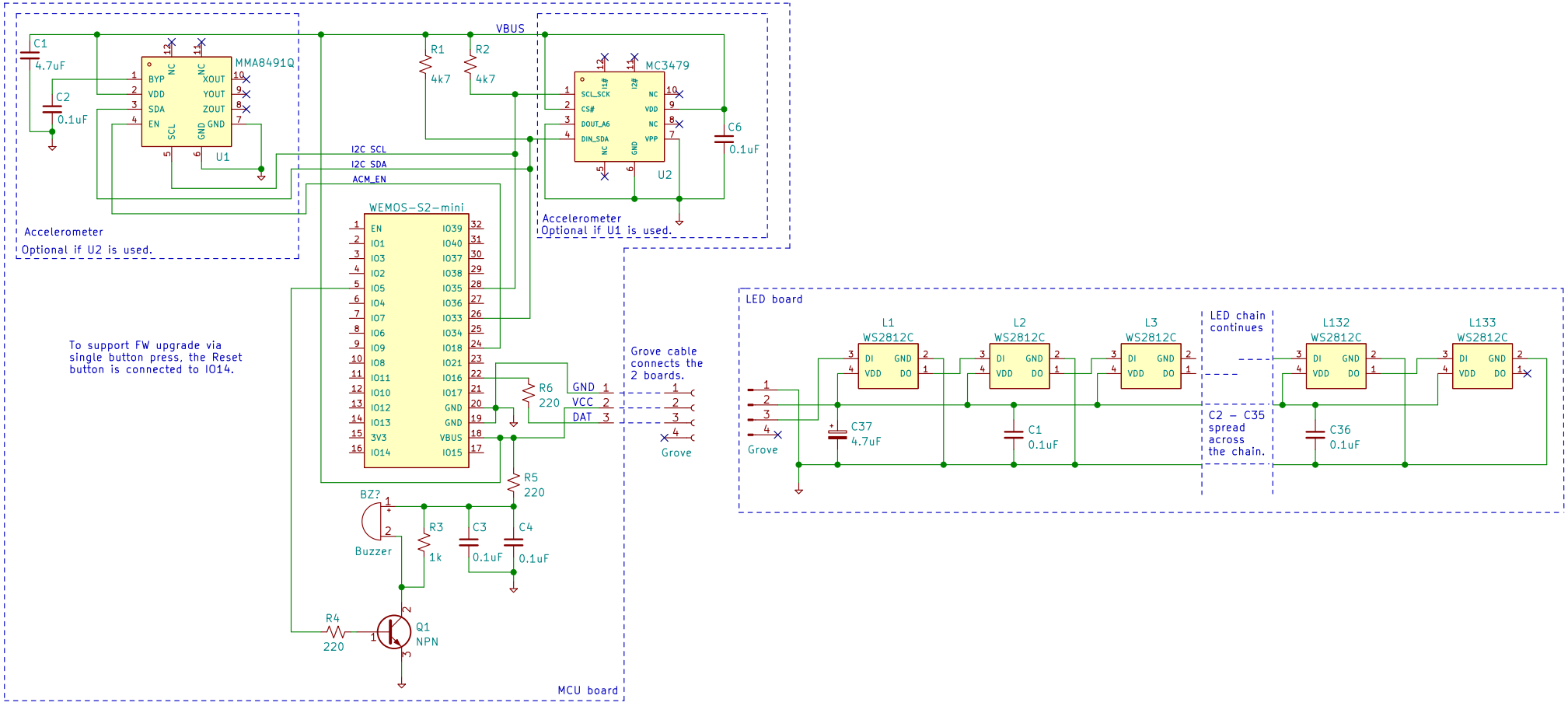

Sheet: /
File: tick-led-schem.kicad_sch

Title: tick-led

Date: 2022-11-25

Rev: 3

Id: 1/1