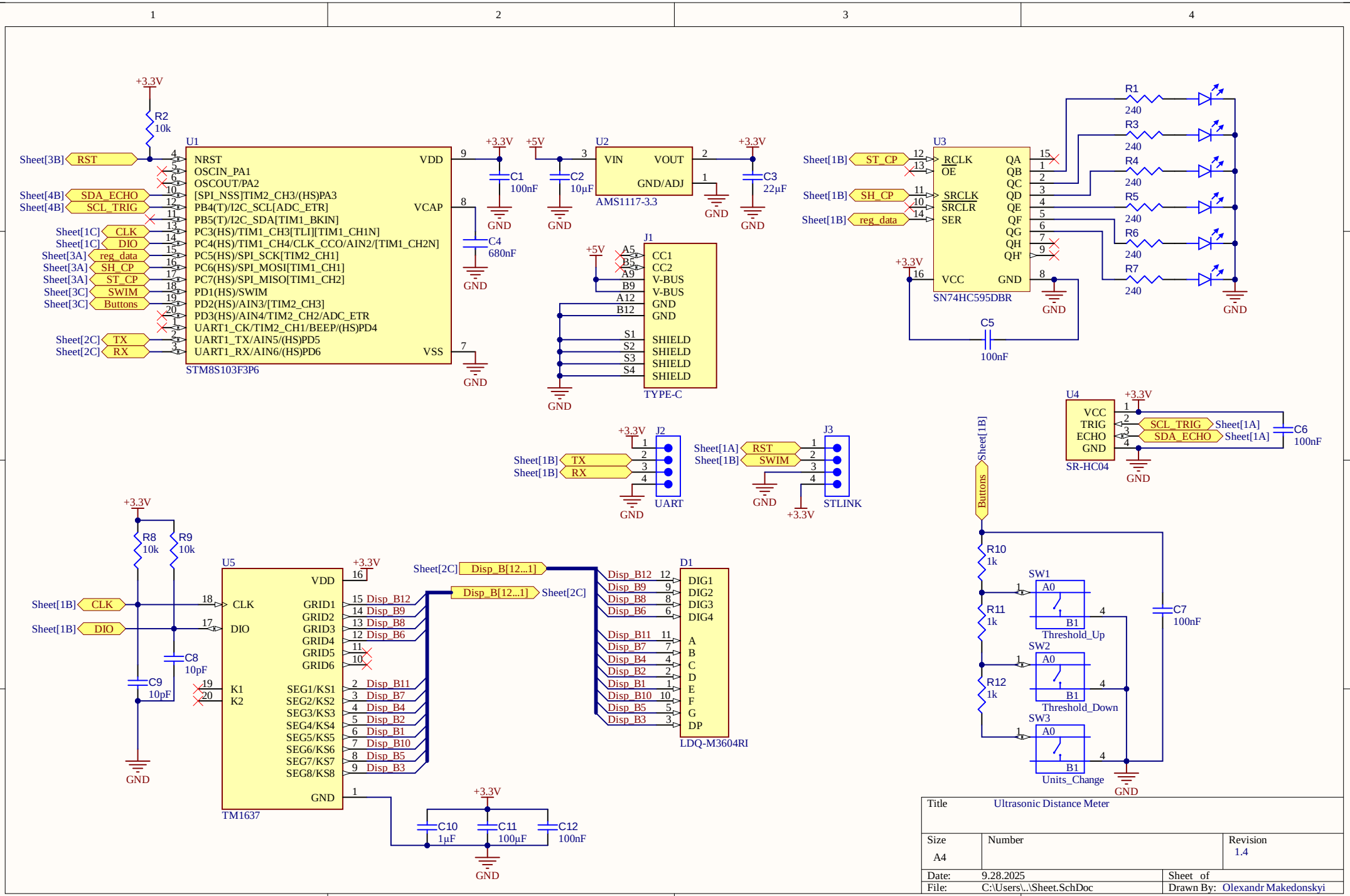

Title	Ultrasonic Distance Meter	
Size A4	Number	Revision 1.4
Date: 9.28.2025		Sheet of
File: C:\Users\..\Sheet.SchDoc		Drawn By: Olexandr Makedonskyi