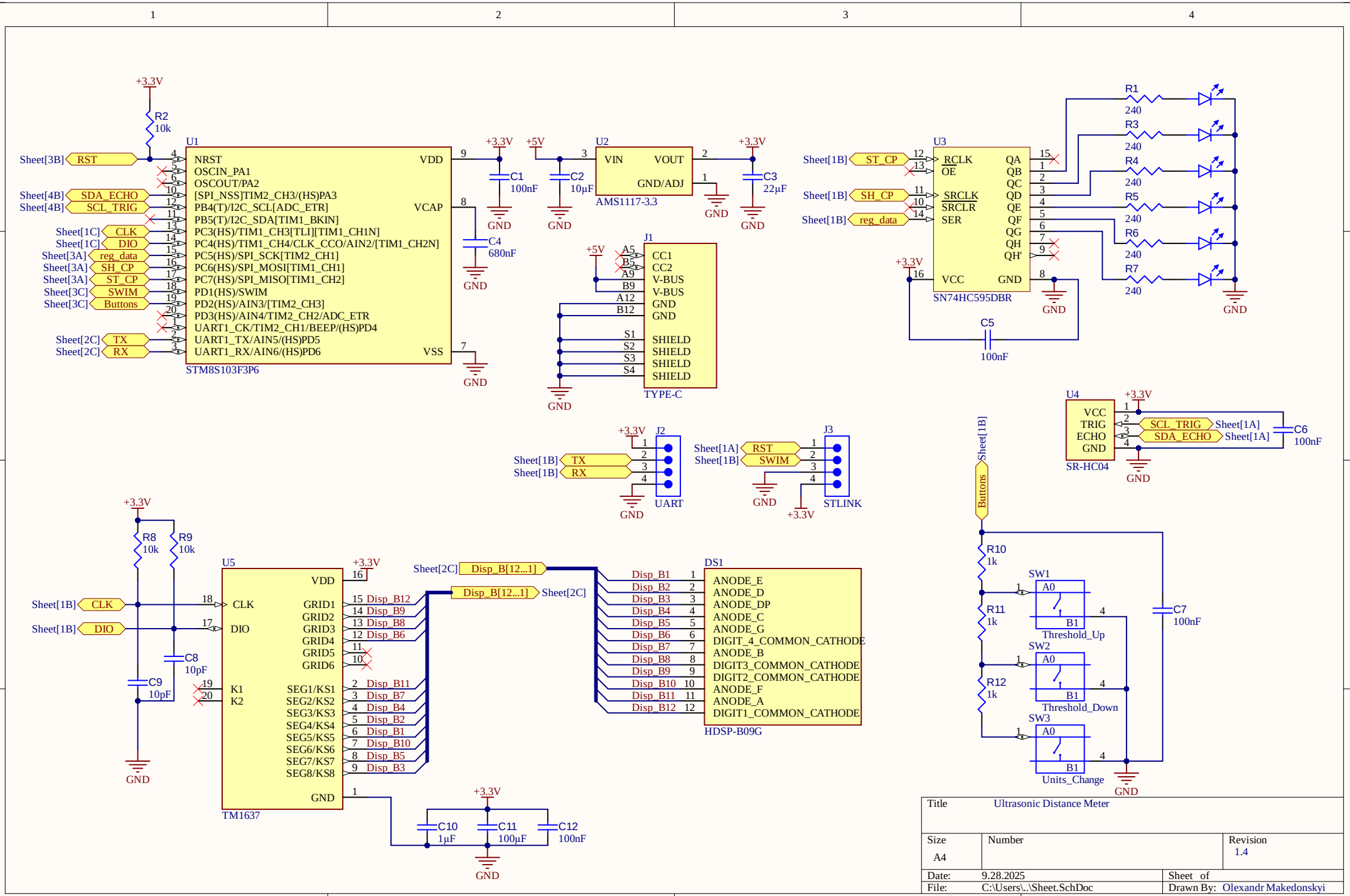
U1
STM8S103F3P6
NRST
OSCIN_PA1
OSCOUT/PA2
[SPI_NSS]TIM2_CH3/(HS)PA3
PB4(T)/I2C_SCL[ADC_ETR]
PB5(T)/I2C_SDA[TIM1_BKIN]
PC3(HS)/TIM1_CH3[TLI][TIM1_CH1N]
PC4(HS)/TIM1_CH4/CLK_CCO/AIN2/[TIM1_CH2N]
PC5(HS)/SPI_SCK[TIM2_CH1]
PC6(HS)/SPI_MOSI[TIM1_CH1]
PC7(HS)/SPI_MISO[TIM1_CH2]
PD1(HS)/SWIM
PD2(HS)/AIN3/[TIM2_CH3]
PD3(HS)/AIN4/TIM2_CH2/ADC_ETR
UART1_CK/TIM2_CH1/BEEP/(HS)PD4
UART1_TX/AIN5/(HS)PD5
UART1_RX/AIN6/(HS)PD6
VDD
VCAP
VSS
Sheet[3B] RST
Sheet[4B] SDA_ECHO
Sheet[4B] SCL_TRIG
Sheet[1C] CLK
Sheet[1C] DIO
Sheet[3A] reg_data
Sheet[3A] SH_CP
Sheet[3A] ST_CP
Sheet[3C] SWIM
Sheet[3C] Buttons
Sheet[2C] TX
Sheet[2C] RX
R2 10k
+3.3V
C1 100nF
C4 680nF
GND
U2
AMS1117-3.3
VIN
VOUT
GND/ADJ
+5V
C2 10µF
C3 22µF
J1
TYPE-C
CC1
CC2
V-BUS
V-BUS
GND
GND
SHIELD
SHIELD
SHIELD
SHIELD
U3
SN74HC595DBR
RCLK
OE
SRCLK
SRCLR
SER
QA
QB
QC
QD
QE
QF
QG
QH
QH'
VCC
GND
Sheet[1B] ST_CP
Sheet[1B] SH_CP
Sheet[1B] reg_data
C5 100nF
R1 240
R3 240
R4 240
R5 240
R6 240
R7 240
U4
SR-HC04
VCC
TRIG
ECHO
GND
SCL_TRIG Sheet[1A]
SDA_ECHO Sheet[1A]
C6 100nF
J2
UART
Sheet[1B] TX
Sheet[1B] RX
J3
STLINK
Sheet[1A] RST
Sheet[1B] SWIM
U5
TM1637
VDD
CLK
DIO
K1
K2
GRID1
GRID2
GRID3
GRID4
GRID5
GRID6
SEG1/KS1
SEG2/KS2
SEG3/KS3
SEG4/KS4
SEG5/KS5
SEG6/KS6
SEG7/KS7
SEG8/KS8
GND
Sheet[1B] CLK
Sheet[1B] DIO
R8 10k
R9 10k
C8 10pF
C9 10pF
Disp_B[12...1]
Sheet[2C]
Disp_B12
Disp_B9
Disp_B8
Disp_B6
Disp_B11
Disp_B7
Disp_B4
Disp_B2
Disp_B1
Disp_B10
Disp_B5
Disp_B3
DS1
HDSP-B09G
ANODE_E
ANODE_D
ANODE_DP
ANODE_C
ANODE_G
DIGIT_4_COMMON_CATHODE
ANODE_B
DIGIT3_COMMON_CATHODE
DIGIT2_COMMON_CATHODE
ANODE_F
ANODE_A
DIGIT1_COMMON_CATHODE
C10 1µF
C11 100µF
C12 100nF
Sheet[1B] Buttons
R10 1k
R11 1k
R12 1k
SW1
Threshold_Up
SW2
Threshold_Down
SW3
Units_Change
C7 100nF
Title Ultrasonic Distance Meter
Size A4
Number
Revision 1.4
Date: 9.28.2025
Sheet of
File: C:\Users\..\Sheet.SchDoc
Drawn By: Olexandr Makedonskyi