Display Architecture

ELEN 4193
Oliver Durnan

Structure of This Course

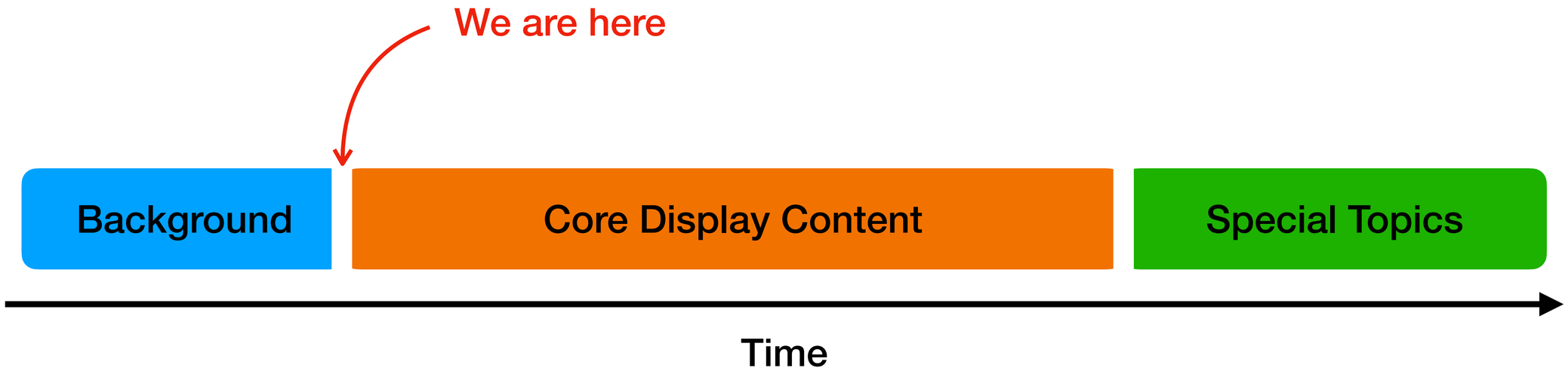

Goals Today

1. Introduce the basic architecture of modern displays

2. Introduce the terminology used to describe them

Anatomy of a Display

A full display can be broken up into a few groups of components:

1. **Panel** → Where patterned light is generated
2. **Optical Stack** → How light gets out of the panel and reaches the viewer
3. **Driver** → What controls the panel
4. **Packaging** → Where the panel is housed

The boundaries between these components aren't always so clear, but this gives the basic idea

Display Panel

- This is the active component that patterns the light
  - Light-emitting
  - Light-modulating
- Contains pixels in a grid
  - “**pic**ture” + “**el**ement”
- Determines: resolution, pixel pitch, color gamut among other things

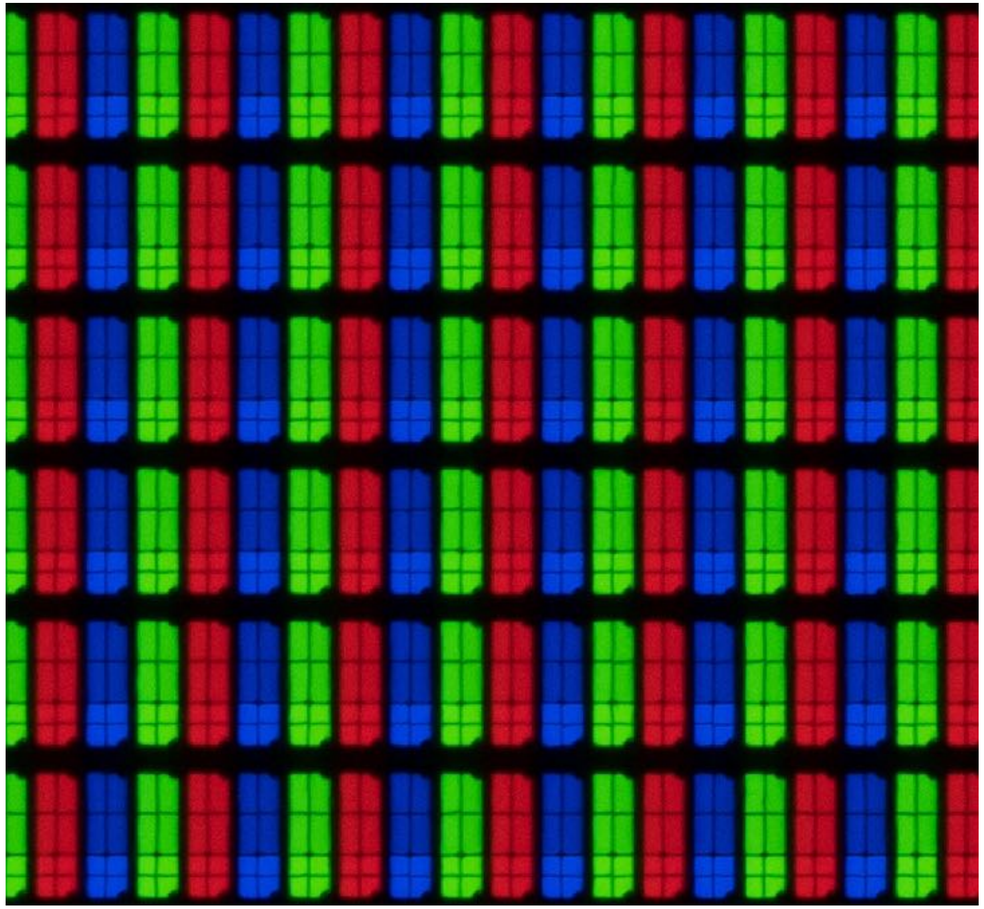

LCD Pixels from Vizio TV - Credit: rtings

Frontplane and Backplane

- Frontplane → The light emitting/patterning medium visible to the viewer
- Backplane → The underlying electronic switches used for controlling the frontplane
- Not necessarily made from the same materials!
- Backplane and frontplane are co-designed in order to meet desired specifications of the panel

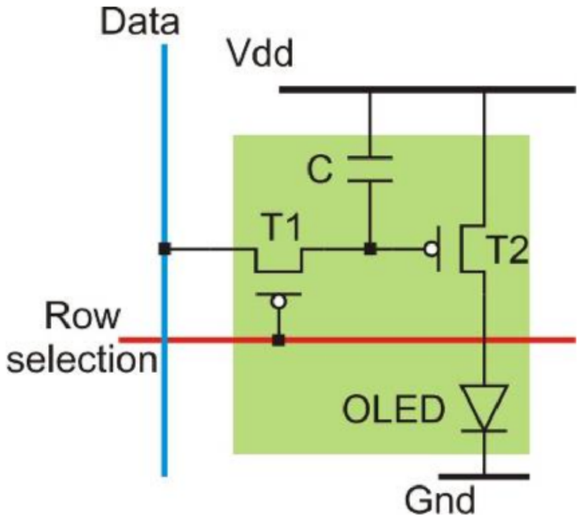

AM pixel circuit- Credit: Organic Light Emitting Diode - Material, Process and Devices by Heremans et al.

Backplane Frontplane

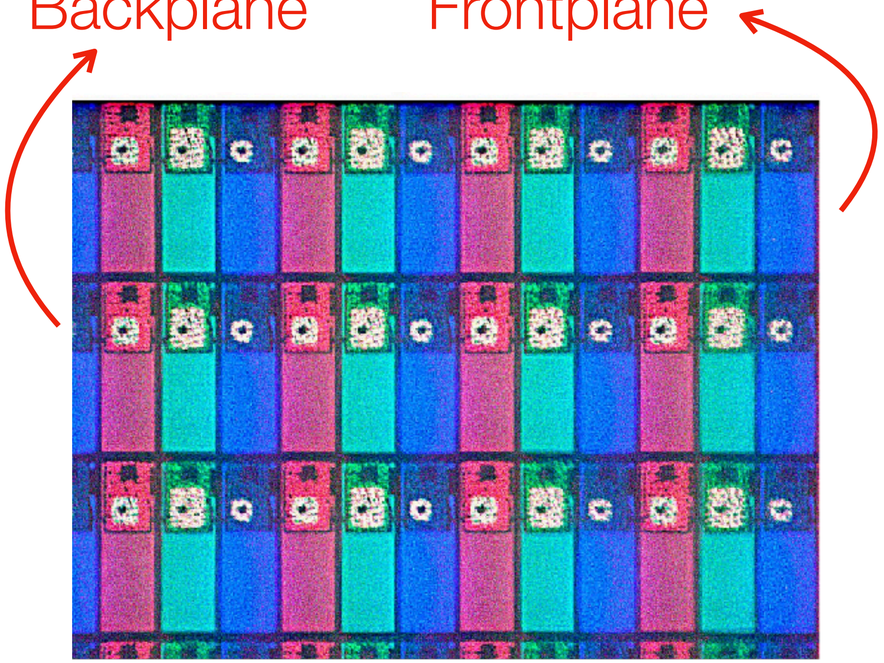

LCD pixels - Credit: wikipedia

Display Optics

- These components exist between the panel and the viewer's eye
- Or sometimes integrated into the panel…
- Primary effects: viewing angle and contrast

Screen privacy protector - Credit: Apple/Belkin

Display Optics: Glossy vs. Matte

- Some monitors have “glossy” finish, others “matte”
- Glossy is a smooth, reflective optical coating
  - Bad reflections, but light coming out of the panel is “perfect”
- Matte is textured to reduce glare by scattering light
  - Less reflections, but light from panel is scattered
  - Leads to loss of clarity
- Choice depends on use case:
  - TVs → Used in dark, cinematic environment → Typically glossy
  - Monitors → Used in bright, office environment → Typically matte

Glossy

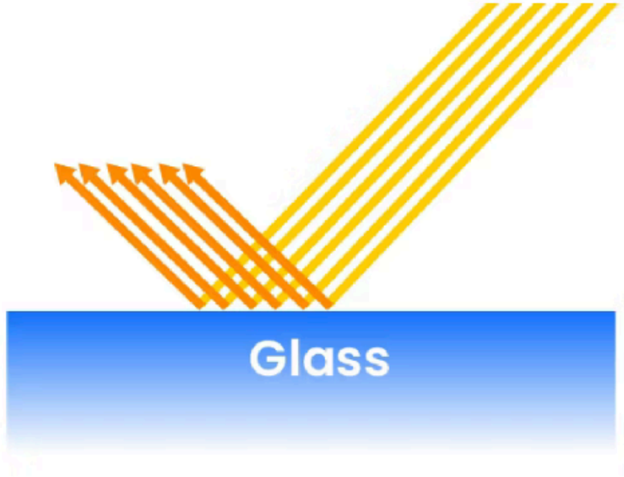

Matte

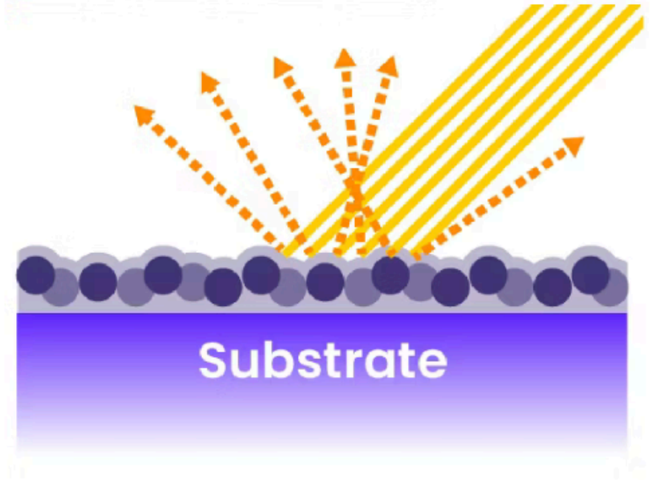

Glossy vs. Matte - Credit: BenQ

Display Optics: Anti-Reflective Coatings

- Thin-film interference creates reflections on flat surfaces
- Even if all layers are transparent, refractive index mismatch creates reflections when we stack them
- Anti-reflective coatings
  - Engineer a stack of layers to provide destructive interference over desired wavelength range
  - More layers → Better broad spectrum reflection cancellation, but more complicated and expensive
  - Single layer AR coating often reflects blue

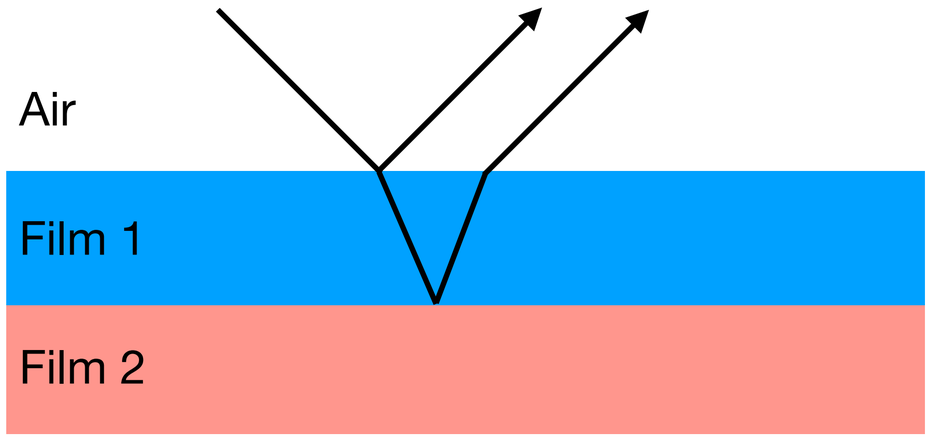

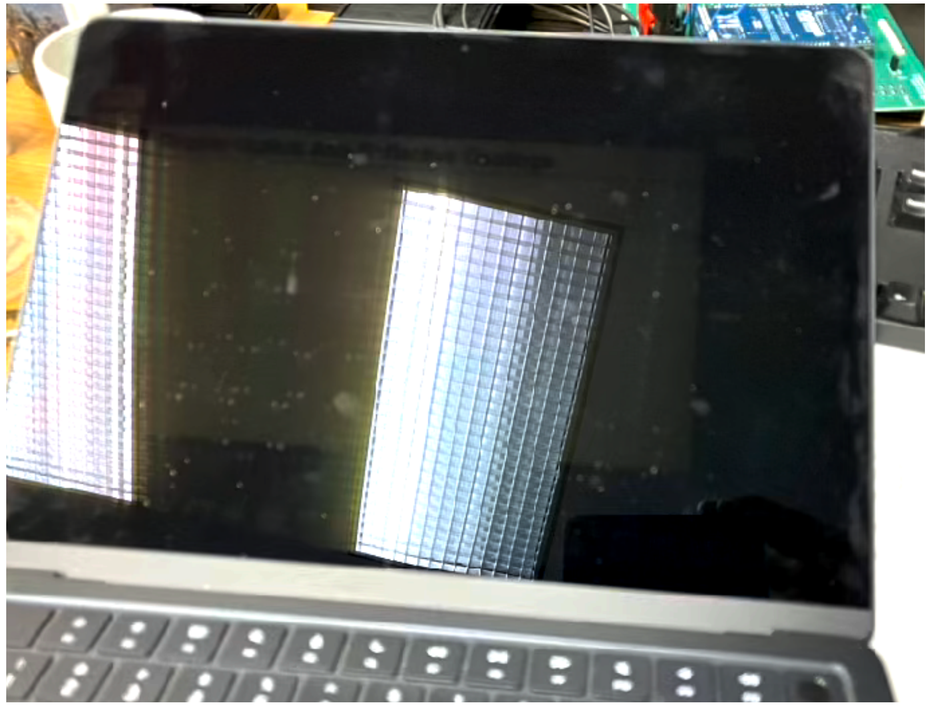

Display Optics: Lenses

- Lenses may be used to steer light in a particular direction
- May be integrated onto the panel, or another layer added on top
- Usually trying to accomplish one of two things:
  - Directional emission → Send light only in a single direction, don't waste photons that aren't going towards the viewer
  - Wide-angle emission → Spread out emitted photons in all directions all, make sure the display can be seen from all viewing angles

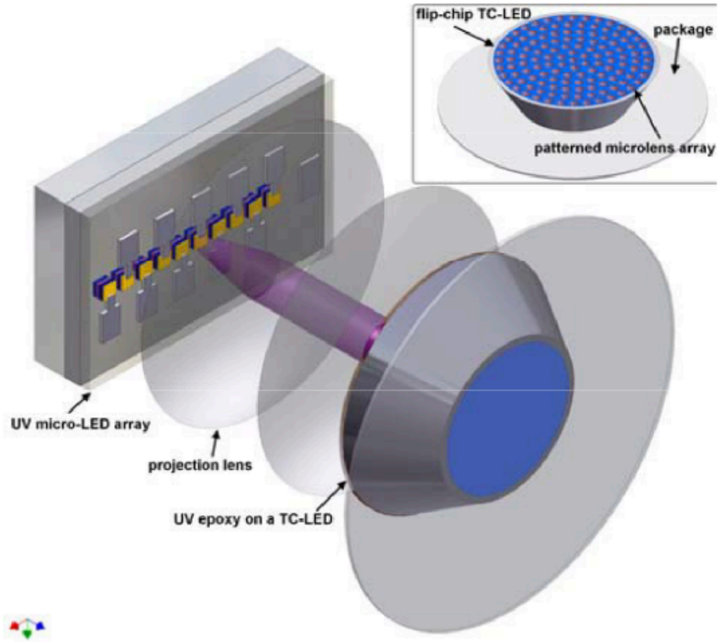

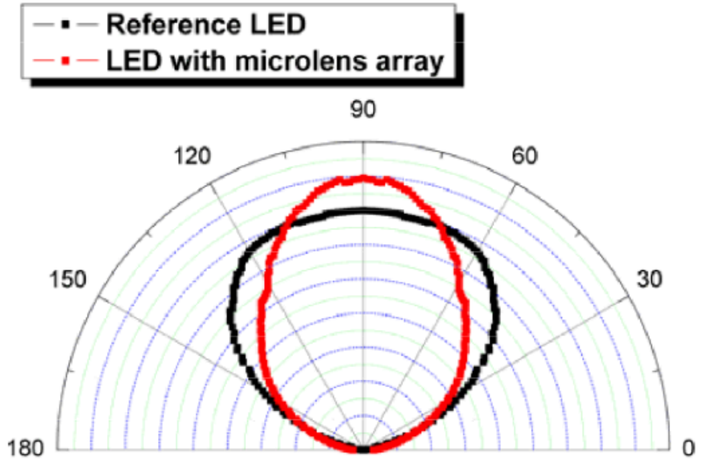

Microlens - Credit: Zhu et al. In IEEE Xplore (2011)

Display Optics: Polarizers

- Many displays have a circular polarizer on top of the panel
- Let's talk about why…

What is this polarizer doing here?

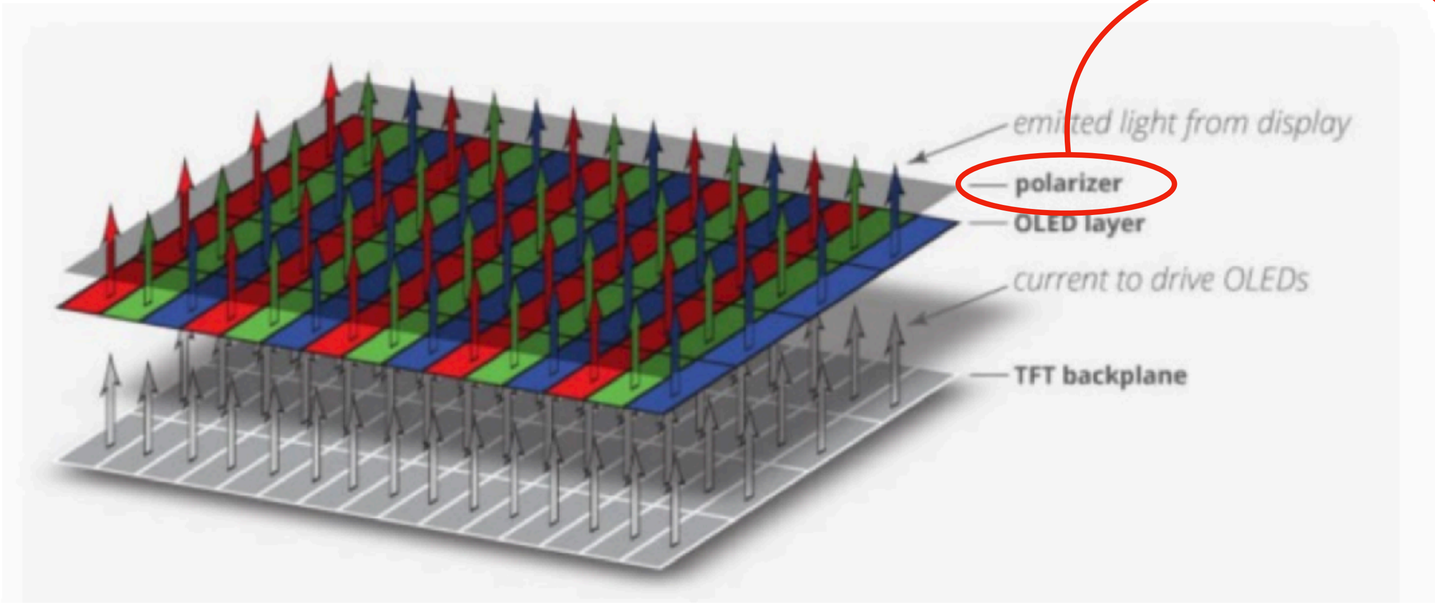

OLED display stack - Credit: ignisinnovation.com

Display Driver

- These are the electronics that control the panel
- Converts video signal from PC into voltages/currents asserted onto output pins to control the state of each pixel in the panel

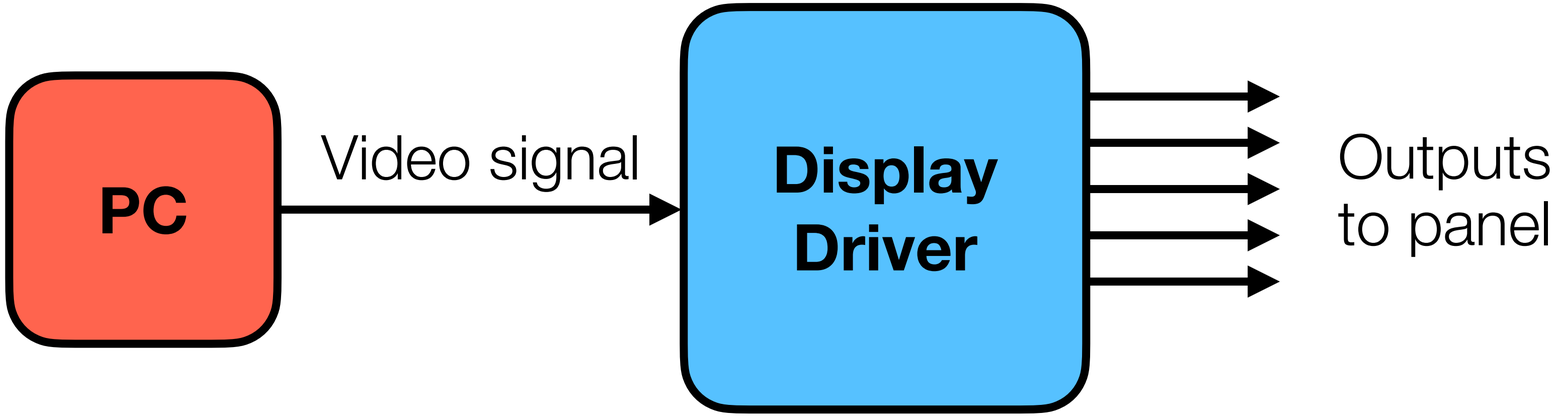

Display Driver Components

- What's going on inside the display driver?
- **Timing controller:** receive video data, generate timing signals, reformat for scaling or color space conversion, store image data to memory buffer
- **Buffer:** store display state, possibly perform image processing
- **Gate Driver:** scan through each row of the display, activating one at a time
- **Source Driver:** apply desired current/voltage to the pixel
- The driver is like the "brain" of the display → Converts commands like image to show or brightness into specific signals

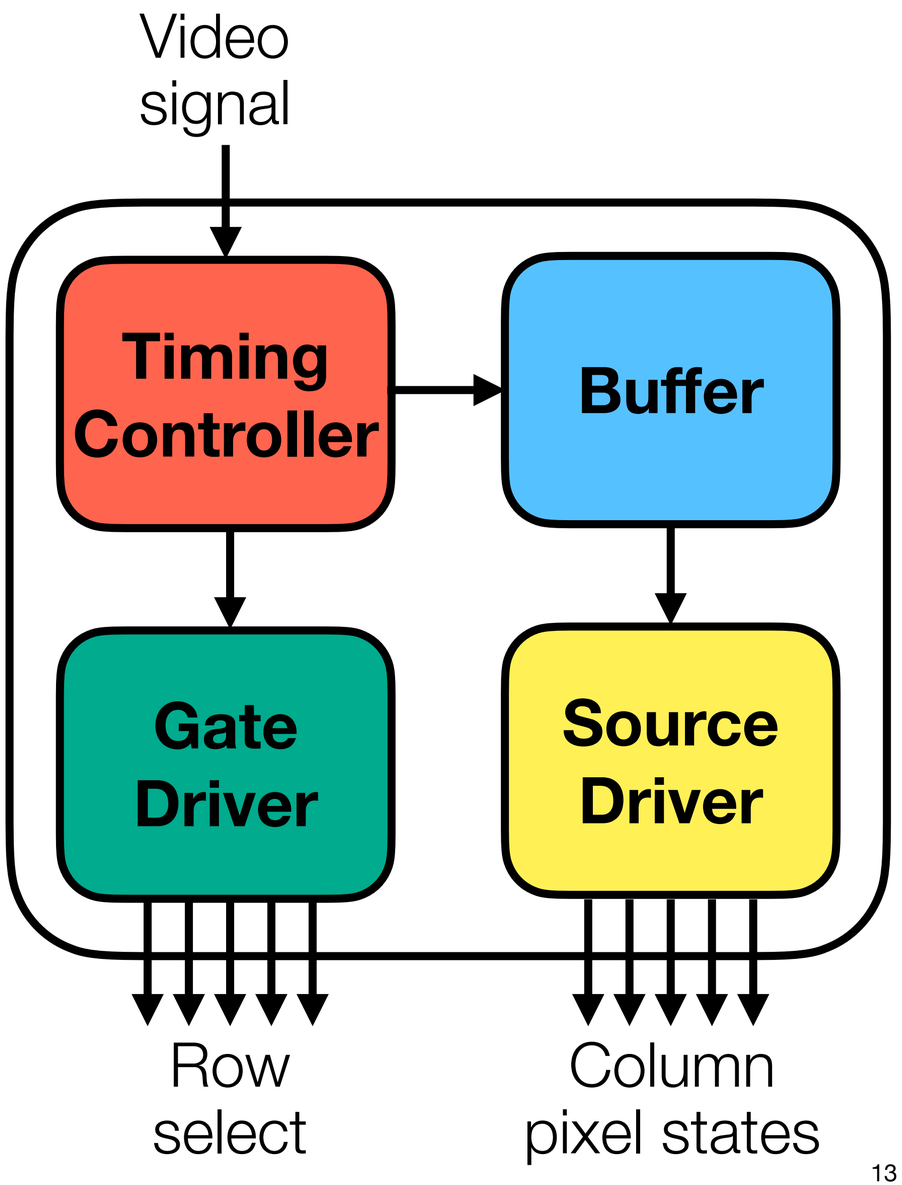

Display Packaging

- The mechanical housing that contains all of the other display components
- Provides structural support, environmental protection
- Mounting hardware
- May have thermal management solutions → heat sinks and fans
- Increasingly important for thin, flexible, and air-sensitive displays (OLED)

Flat-panel display monitor - Credit: wikipedia

Addressing Schemes

- We often talk about how a display is "addressed"
- High resolution → Lots of pixels → Impractical to wire them all individually
- We typically differentiate between addressing schemes:
  - **Direct:** each pixel has a dedicated connection
  - **Matrix:** pixels connected in rows / columns
  - **Raster Scanning:** "pixels" activated by scanning a source in space

4K Pixel Count:

Direct:

Matrix:

Scanning:

Active vs. Passive Matrix Backplanes

Passive Matrix

1. Only passive components (wires)
2. No storage at pixel

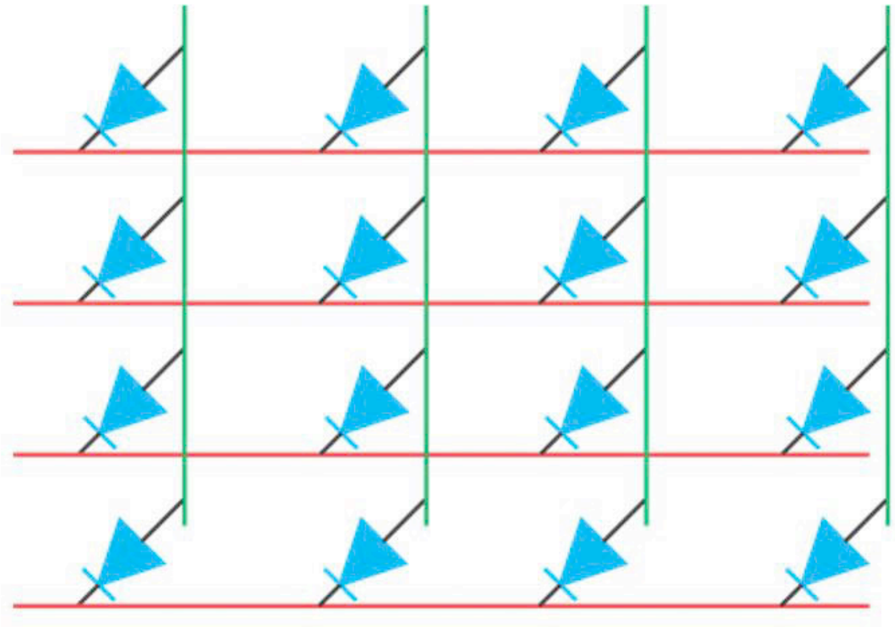

Active Matrix

1. Transistor and capacitor for storage
2. Higher complexity and performance

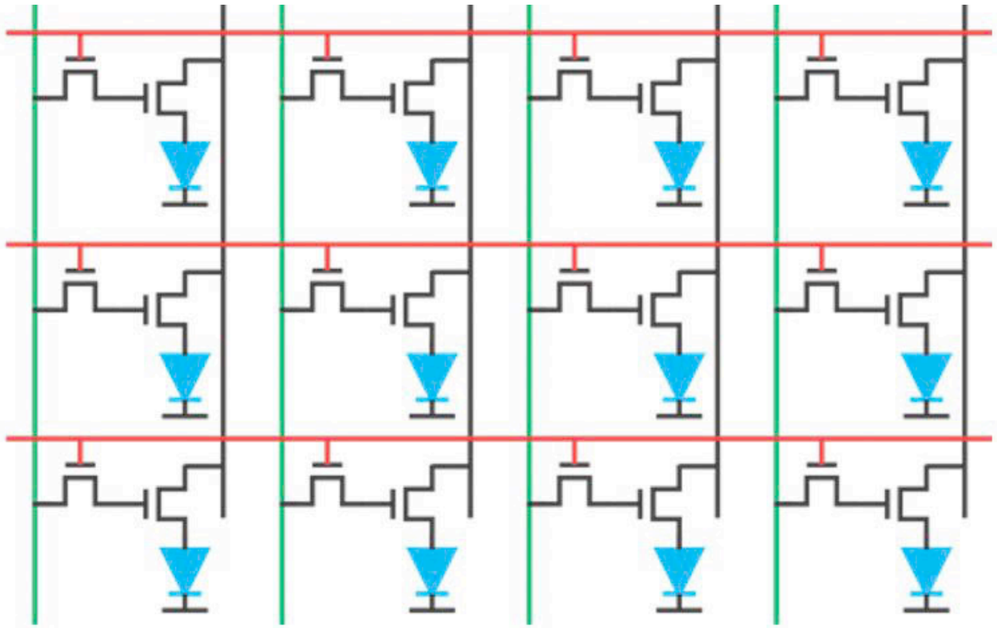

Passive and active LED matrix - Credit: imec

Thin-Film Transistors

- This class isn't about transistors, but they will come up
- Various types of transistors are relevant to modern displays
- But mostly, we will talk about "thin-film" transistors
- These behave a lot like MOSFETs that you learn about in circuits or solid state devices classes
  - Digital → switch
  - Analog → current source
- In my opinion, even simpler to understand than MOSFETs or BJTs…

MOS vs. TFT

Metal-Oxide-Semiconductor Transistor

- Device is built by modifying a semiconductor substrate
- Transistor action arises from pn junction in the semiconductor and field effect
- Small, high-performance

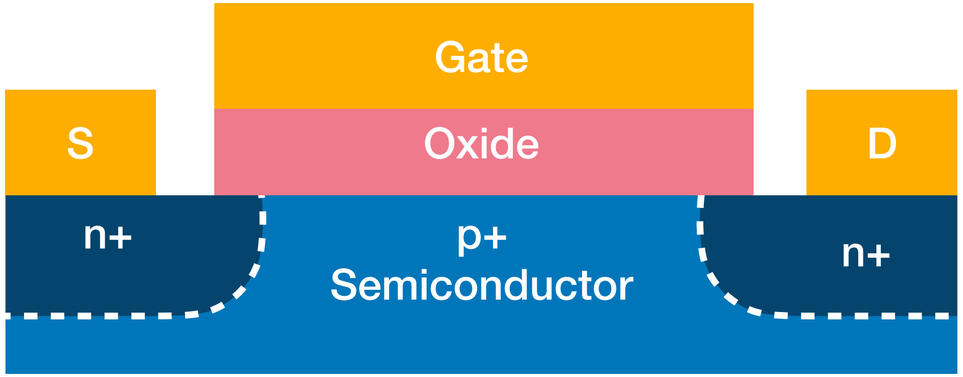

Thin-Film Transistor

- Device is built by depositing films on a substrate
- Field effect induces charge in semiconductor → $\Delta\sigma \propto \mu e \Delta n$
- Large-area, flexible, etc.

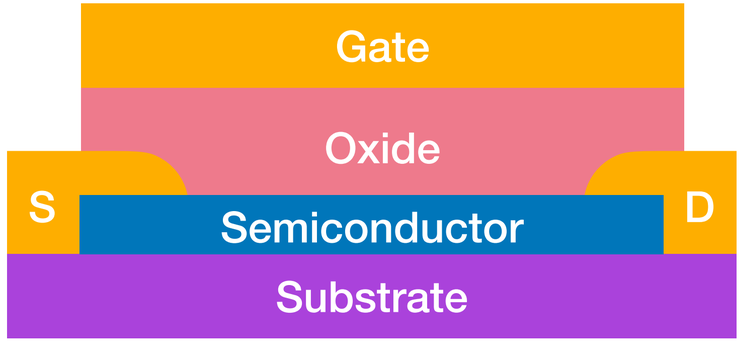

Performance Metrics

- **Resolution** → How many pixels are in the display. Usually expressed as $n_{rows} \times n_{columns}$
- **Pixel Pitch** → How dense are the pixels. Calculated $PPI = n_{pixel}/d$ where d is diagonal length in inches
- **Size** → Simple… What are the dimensions of the display.
- **Color Gamut** → What colors can be shown.
- **Refresh Rate** → How many image updates can the display do per second, $1/t_{frame}$.
- **Contrast** → How bright are the whites in comparison to how dark the blacks are.
- **Clarity** → How “sharp” do images look. Depends on pixel density and pixel layout.
- **Luminance** → How “bright” the display is. Measured in nits (cd/m^2)

High Dynamic Range

- Luminance dynamic range is the ratio between the brightest and darkest values the display can produce
- Standard Dynamic Range (SDR) displays have limited brightness range → Usually 8-bit colors
- High Dynamic Range (HDR) Simultaneous bright whites and dark blacks → 10- or 12-bit color
- HDR Goal: Better represent the full range of luminance found in real-world scenes - from deep shadows to bright sunlight
- HDR standards are a mess…
  - What range matters?
  - How close/far are the black/white?

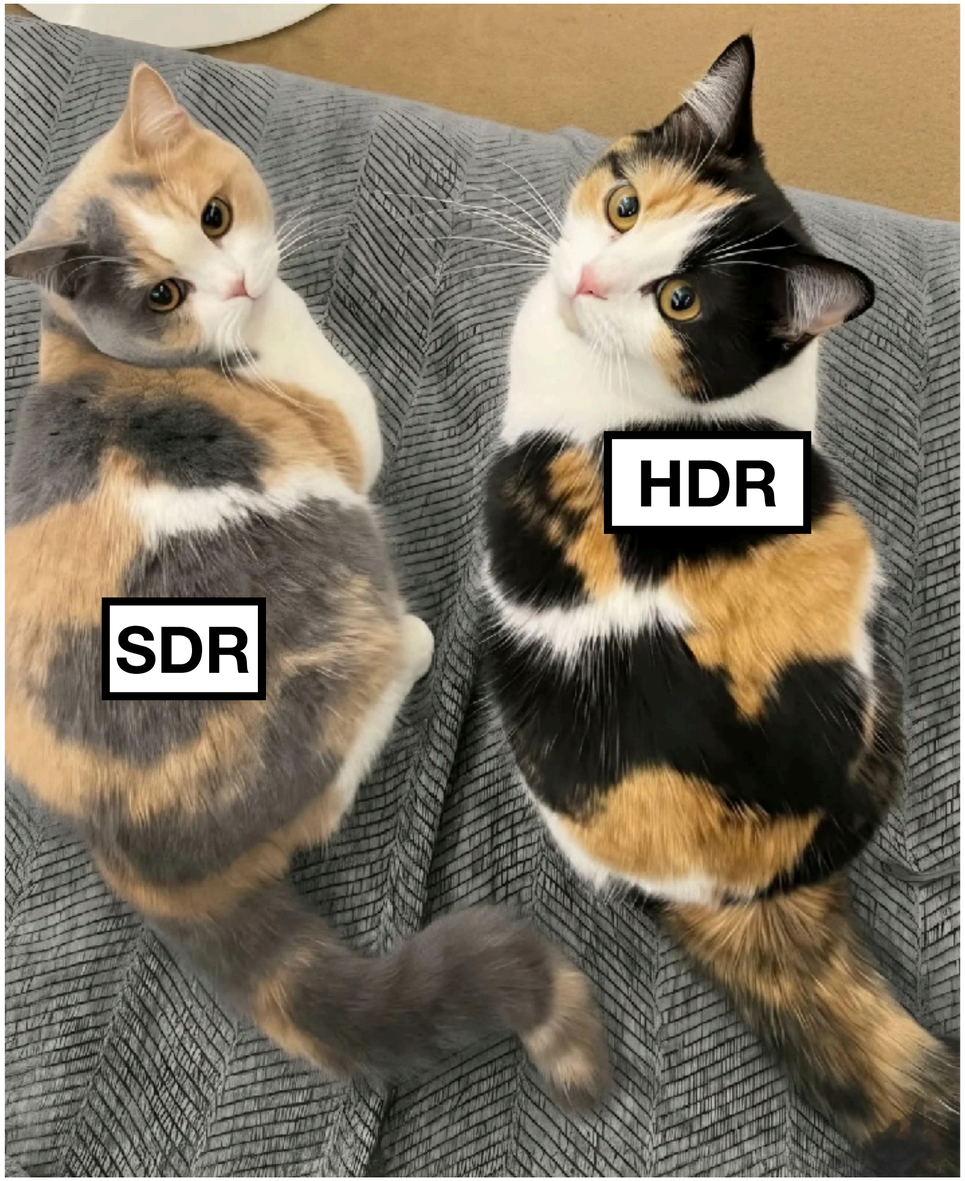

Credit: u/Huzaifa_Haroon on reddit

Summary

- A display system consists of four main components: Panel, Optics, Driver, and Packaging
- Addressing schemes determine how pixels are controlled: direct, matrix (passive/active), or scanning
- There are only a few panel makers → LG, Samsung, and BOE, are some of the largest
- But a lot of display vendors → Dell, HP, Asus, Apple, Acer, Lenovo, ViewSonic, AOC, Gigabyte, Xiaomi, Innocn…
- Next: We'll explore specific display technologies (starting with LCD) and how they implement these architectural concepts