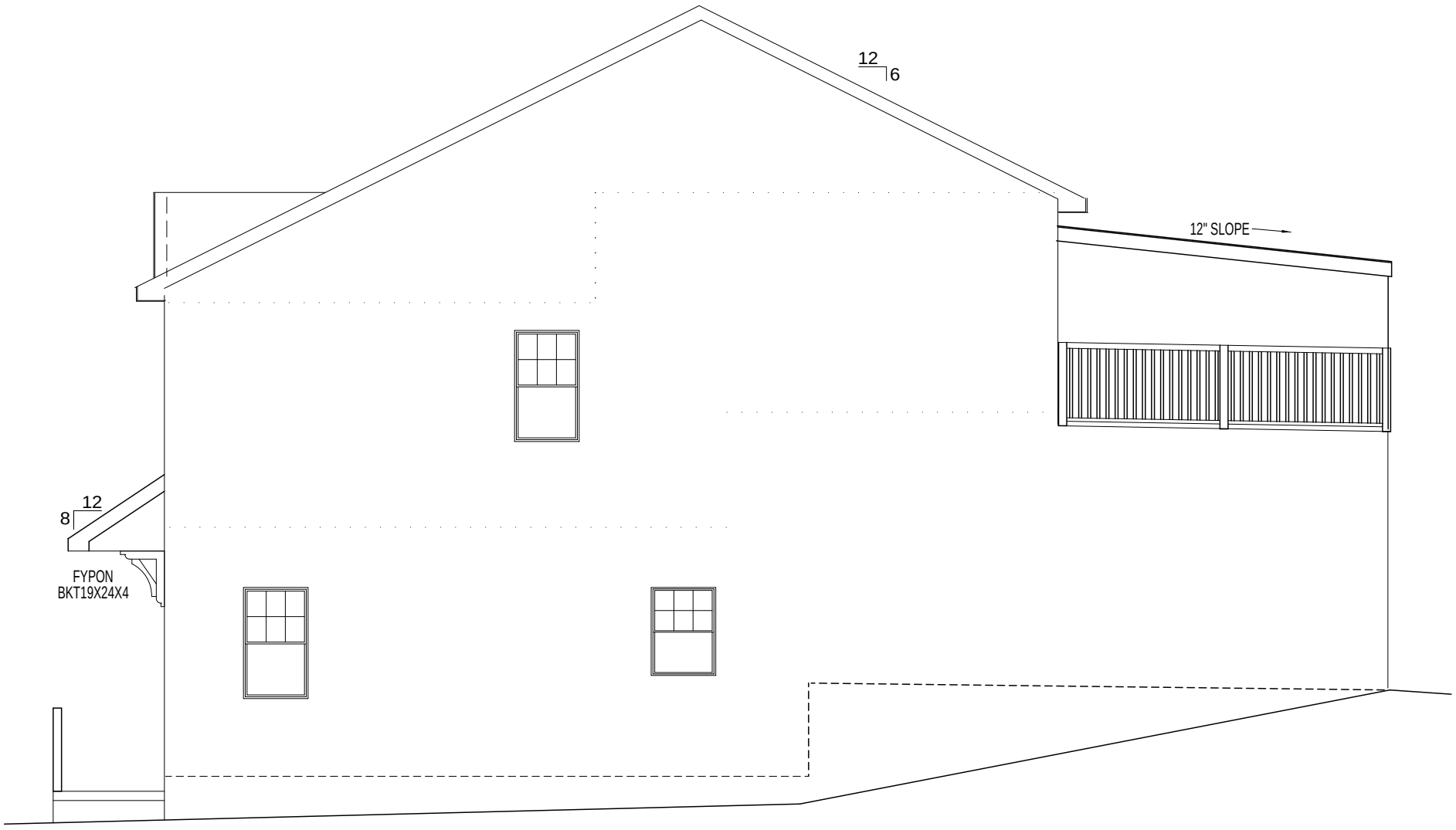

UNIT #27
RIGHT SIDE ELEVATION

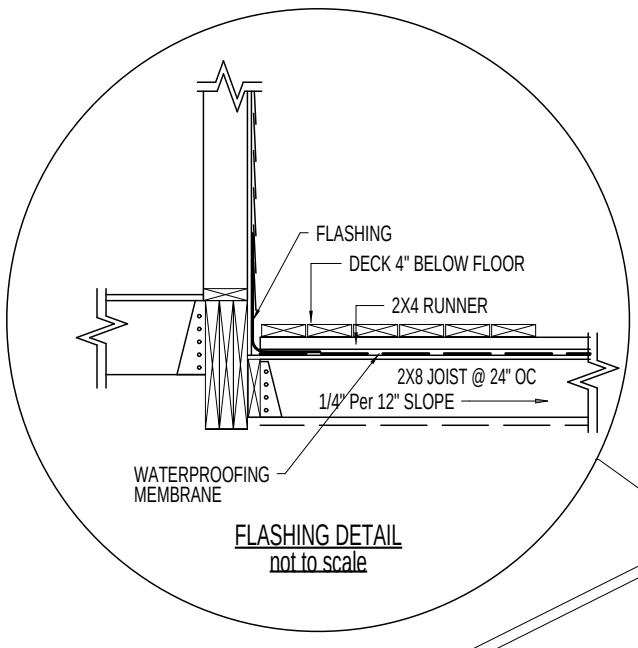

FLASHING DETAIL
not to scale

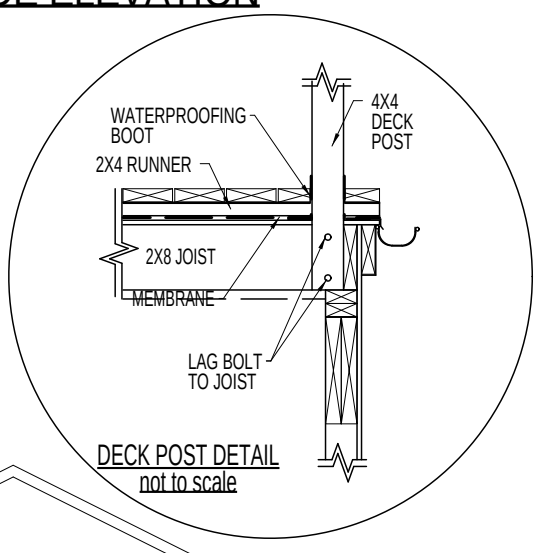

DECK POST DETAIL
not to scale

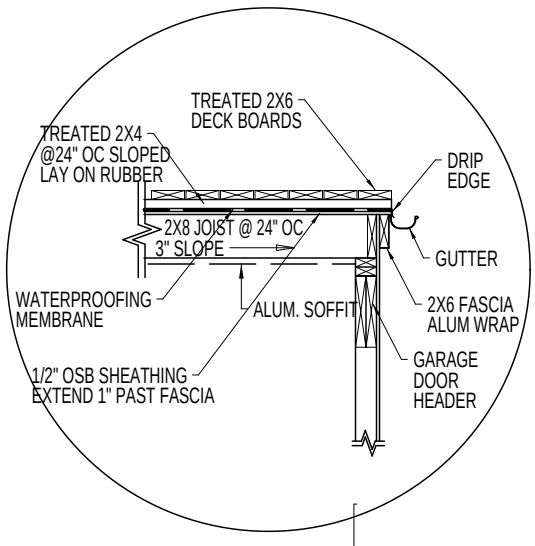

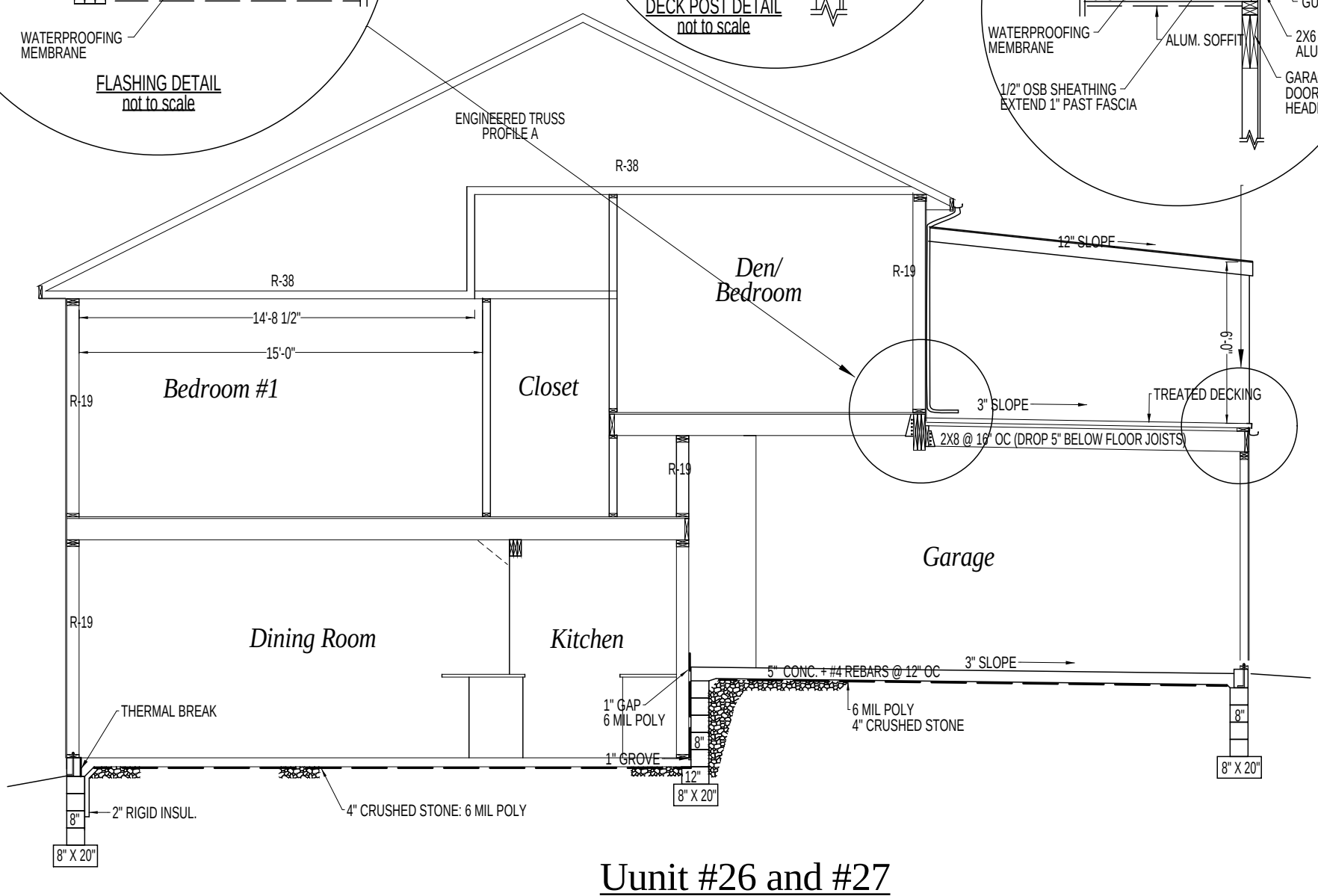

Uunit #26 and #27
Section AA

SHEET	JOB NUMBER:	SCALE: 3/16" = 1' 0"	DATE: 2/28/2013	UNIT # 25, 611 Cromwell Circle UNIT # 26, 609 Cromwell Circle UNIT # 27, 607 Cromwell Circle	PROJECT Summerfield Pequea Township	Millfield CONSTRUCTION COMPANY 2130 MARIETTA AVE LANCASTER PA 17603 (717) 293-0293 WWW.millfield.com		REVISIONS DATE