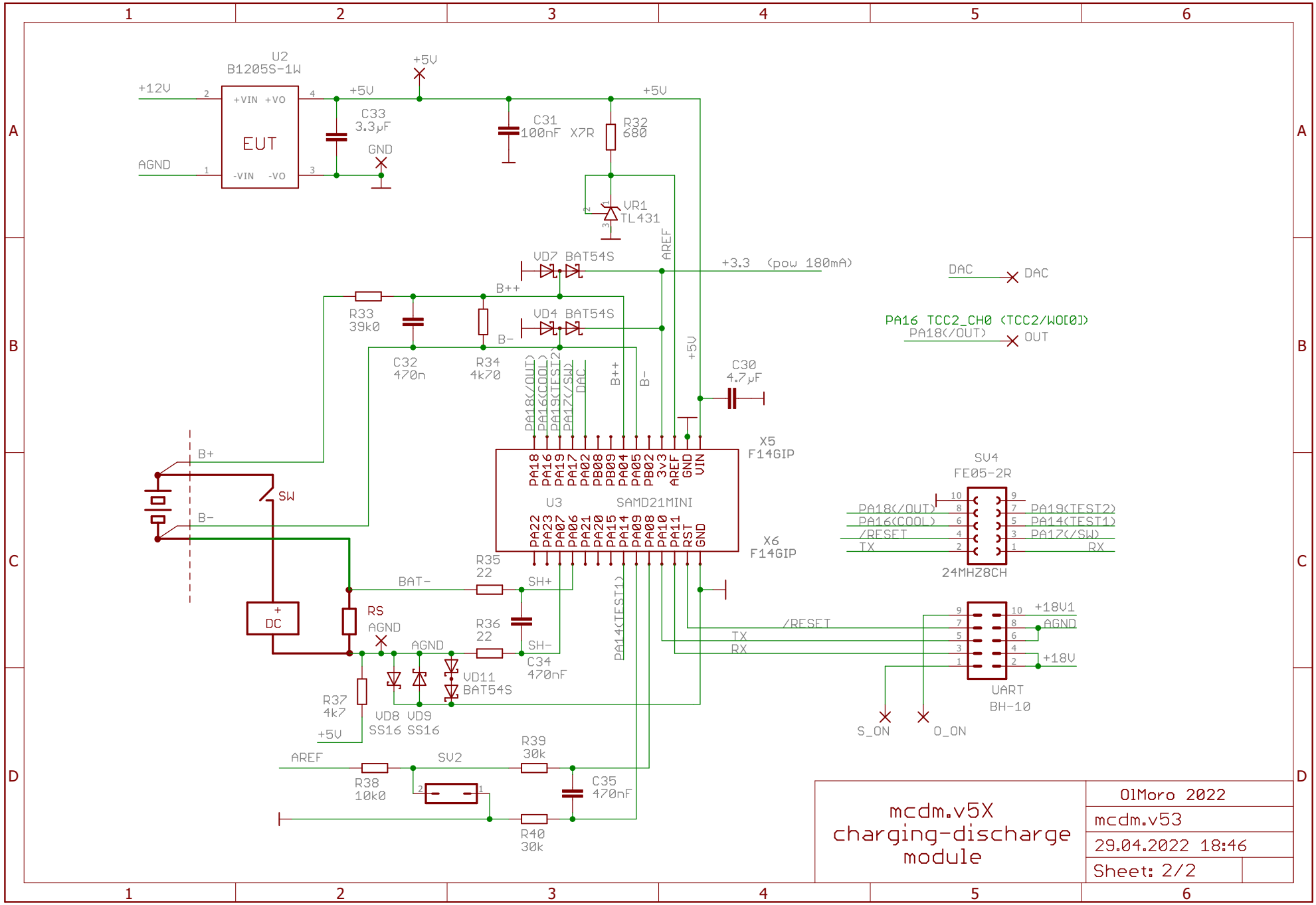

mcdm.v5X
charging-discharge
module

OlMoro 2022
mcdm.v53
29.04.2022 18:46
Sheet: 2/2