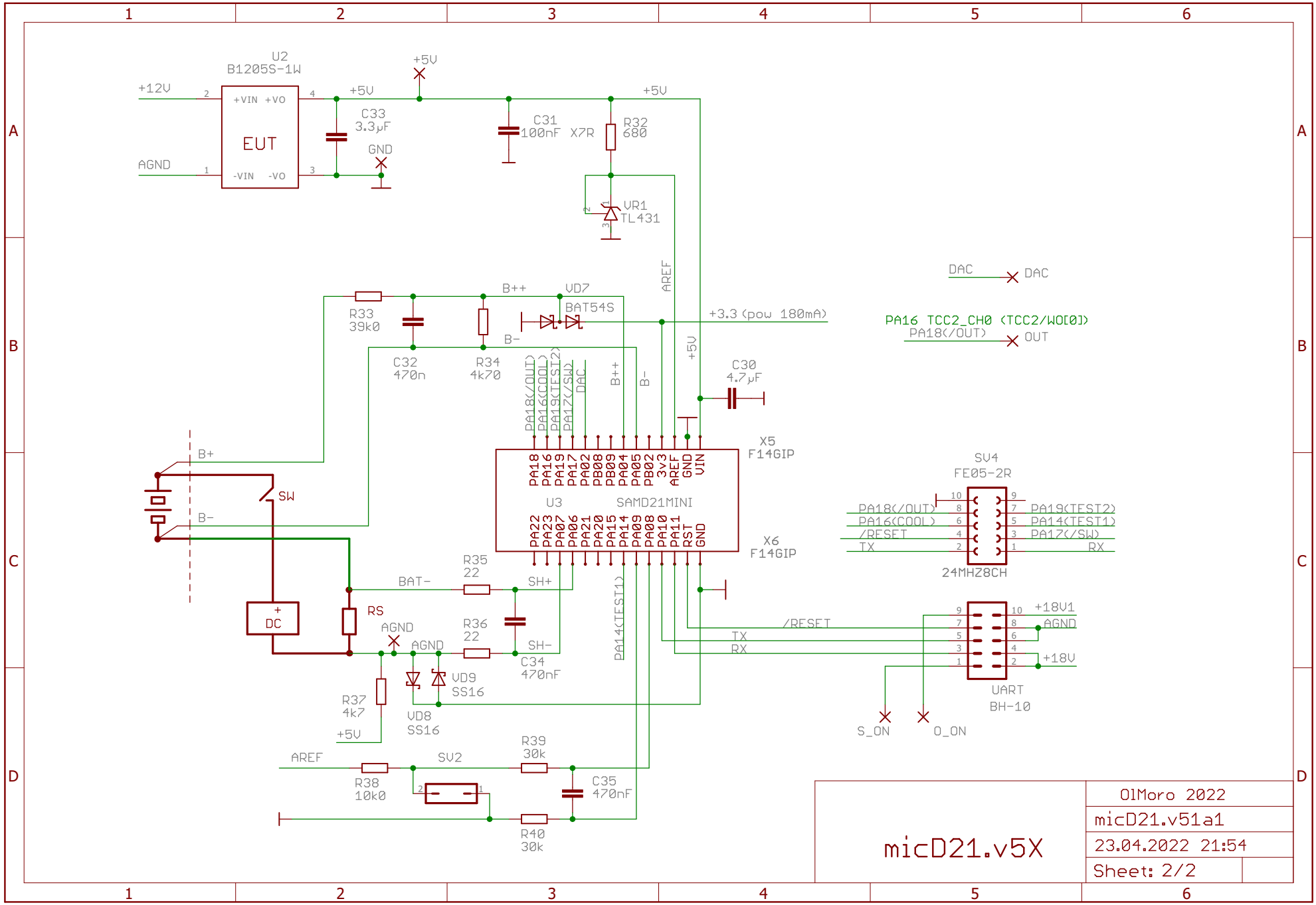

micD21.v5X	OlMoro 2022
	micD21.v51a1
	23.04.2022 21:54
	Sheet: 2/2