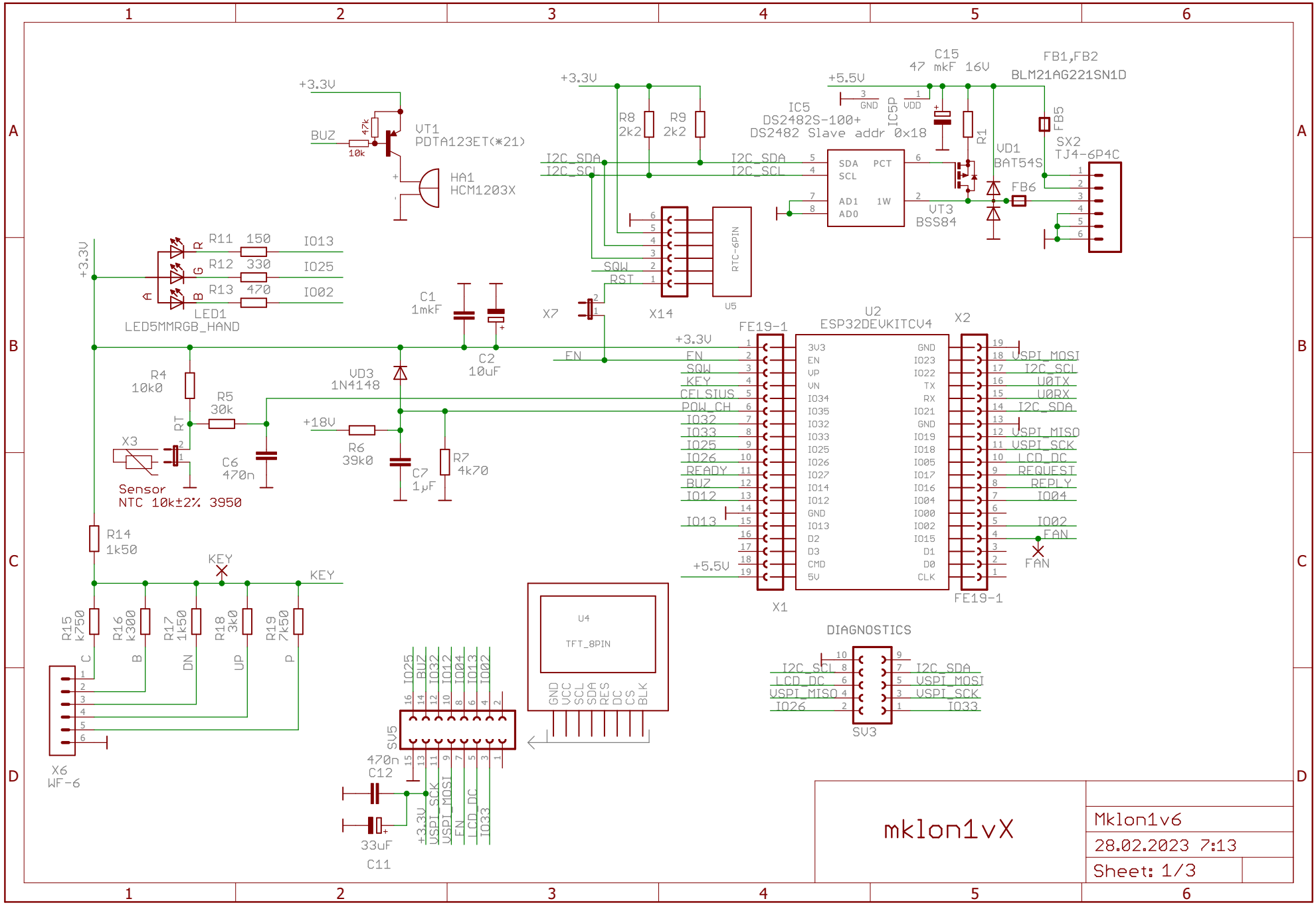
+3.3V
BUZ
47k
10k
VT1
PDTA123ET(*21)
HA1
HCM1203X
R8
2k2
R9
2k2
I2C_SDA
I2C_SCL
IC5
DS2482S-100+
DS2482 Slave addr 0x18
SDA
SCL
AD1
AD0
PCT
1W
IC5P
GND
VDD
+5.5V
C15
47 mkF 16V
FB1,FB2
BLM21AG221SN1D
FB5
R1
VD1
BAT54S
FB6
VT3
BSS84
SX2
TJ4-6P4C
RTC-6PIN
U5
X14
SQW
RST
X7
R11 150 IO13
R12 330 IO25
R13 470 IO02
LED1
LED5MMRGB_HAND
C1
1mkF
C2
10uF
EN
R4
10k0
R5
30k
VD3
1N4148
RT
X3
Sensor
NTC 10k±2% 3950
C6
470n
+18V
R6
39k0
C7
1μF
R7
4k70
R14
1k50
KEY
R15 k750
R16 k300
R17 1k50
R18 3k0
R19 7k50
C
B
DN
UP
P
X6
WF-6
U2
ESP32DEVKITCV4
FE19-1
X1
X2
3V3
EN
VP
VN
IO34
IO35
IO32
IO33
IO25
IO26
IO27
IO14
IO12
GND
IO13
D2
D3
CMD
5V
GND
IO23
IO22
TX
RX
IO21
GND
IO19
IO18
IO05
IO17
IO16
IO04
IO00
IO02
IO15
D1
D0
CLK
FEN
SQW
KEY
CFLSIUS
POW_CH
IO32
IO33
IO25
IO26
READY
BUZ
IO12
IO13
+5.5V
VSPI_MOSI
I2C_SCL
U0TX
U0RX
I2C_SDA
VSPI_MISO
VSPI_SCK
LCD_DC
REQUEST
REPLY
IO04
IO02
FAN
U4
TFT_8PIN
GND
VCC
SCL
SDA
RES
DC
CS
BLK
SV5
IO25
BUZ
IO32
IO12
IO04
IO13
IO02
+3.3V
VSPI_SCK
VSPI_MOSI
FEN
LCD_DC
IO33
470n
C12
33uF
C11
DIAGNOSTICS
SV3
I2C_SCL
LCD_DC
VSPI_MISO
IO26
I2C_SDA
VSPI_MOSI
VSPI_SCK
IO33
mklon1vX
Mklon1v6
28.02.2023 7:13
Sheet: 1/3