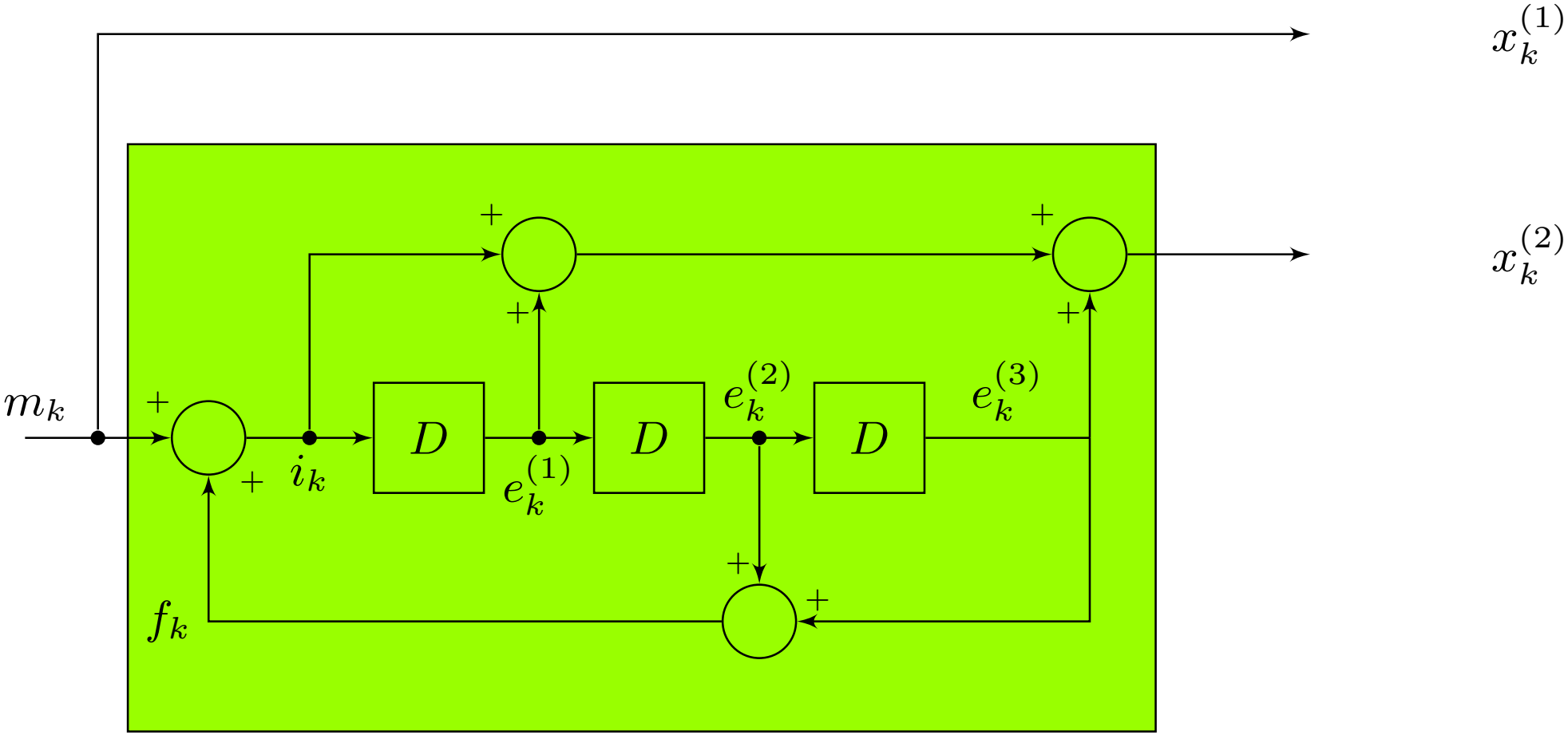

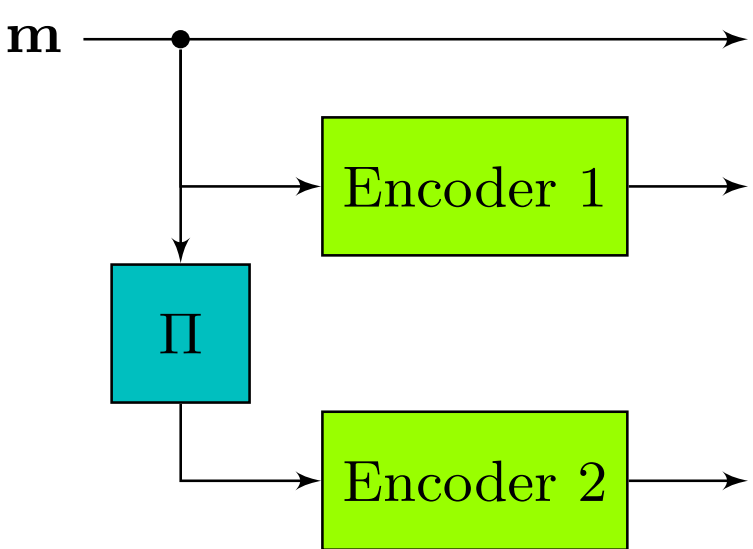

Coding rate $R = 1/3$