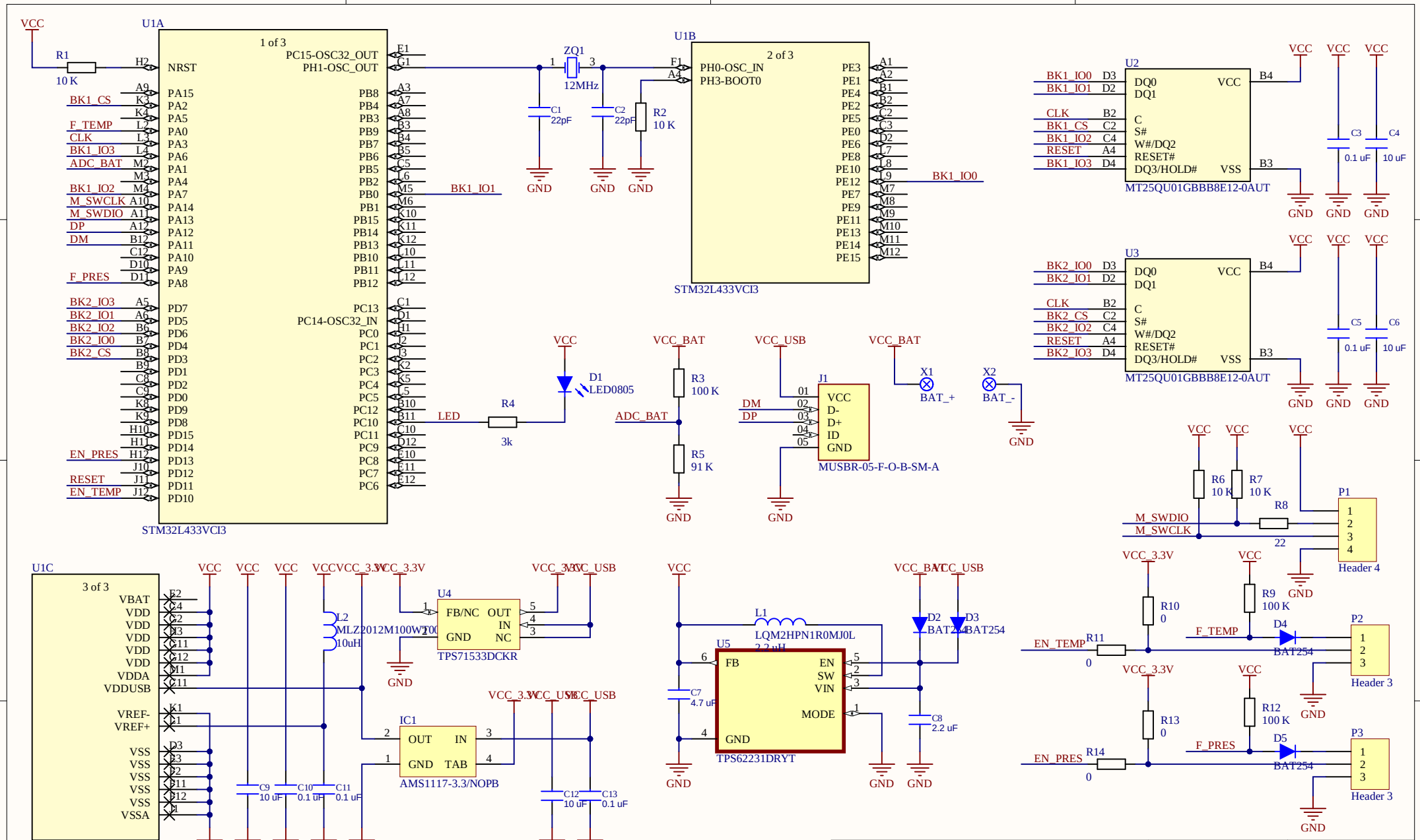
U1A
1 of 3
STM32L433VCI3
U1B
2 of 3
STM32L433VCI3
U1C
3 of 3
STM32L433VCI3
U2
MT25QU01GBBB8E12-0AUT
U3
MT25QU01GBBB8E12-0AUT
ZQ1
12MHz
J1
MUSBR-05-F-O-B-SM-A
U4
TPS71533DCKR
IC1
AMS1117-3.3/NOPB
U5
TPS62231DRYT
L1
LQM2HPN1R0MJ0L
L2
MLZ2012M100WT
D1
LED0805
D2
BAT254
D3
BAT254
D4
BAT254
D5
BAT254
P1
Header 4
P2
Header 3
P3
Header 3
X1
BAT_+
X2
BAT_-
VCC
VCC_BAT
VCC_USB
VCC_3.3V
GND
R1
10 K
R2
10 K
R3
100 K
R4
3k
R5
91 K
R6
10 K
R7
10 K
R8
22
R9
100 K
R10
0
R11
0
R12
100 K
R13
0
R14
0
C1
22pF
C2
22pF
C3
0.1 uF
C4
10 uF
C5
0.1 uF
C6
10 uF
C7
4.7 uF
C8
2.2 uF
C9
10 uF
C10
0.1 uF
C11
0.1 uF
C12
10 uF
C13
0.1 uF
BK1_CS
F_TEMP
CLK
BK1_IO3
ADC_BAT
BK1_IO2
M_SWCLK
M_SWDIO
DP
DM
F_PRES
BK2_IO3
BK2_IO1
BK2_IO2
BK2_IO0
BK2_CS
EN_PRES
RESET
EN_TEMP
BK1_IO1
BK1_IO0
LED
BK2_IO0
BK2_IO1
BK2_CS
BK2_IO2
M_SWDIO
M_SWCLK
EN_TEMP
EN_PRES
F_TEMP
F_PRES
Title
Size: A4
Number:
Revision:
Date: 22.02.2022
Time: 8:45:47
Sheet of
File: D:\Desktop\Проекты\Скважный_самописец_125_гр\Samopisec.SchDoc
Altium Limited
L3, 12a Rodborough Rd
Frenchs Forest
NSW
Australia 2086
Altium