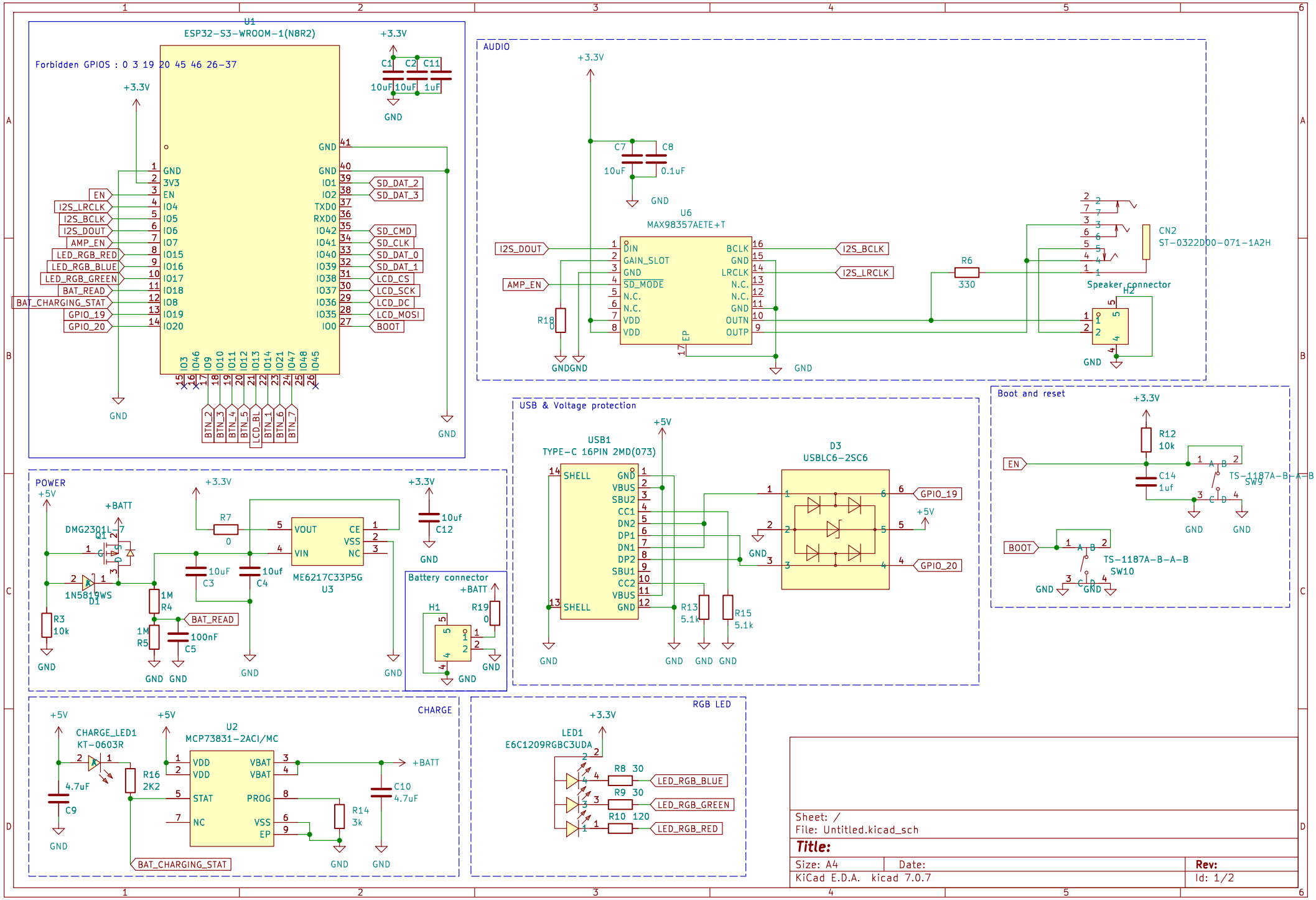
U1
ESP32-S3-WROOM-1(N8R2)
Forbidden GPIOS : 0 3 19 20 45 46 26-37
+3.3V
C1 C2 C11
10uF 10uF 1uF
GND
EN
I2S_LRCLK
I2S_BCLK
I2S_DOUT
AMP_EN
LED_RGB_RED
LED_RGB_BLUE
LED_RGB_GREEN
BAT_READ
BAT_CHARGING_STAT
GPIO_19
GPIO_20
SD_DAT_2
SD_DAT_3
SD_CMD
SD_CLK
SD_DAT_0
SD_DAT_1
LCD_CS
LCD_SCK
LCD_DC
LCD_MOSI
BOOT
BTN_2
BTN_3
BTN_4
BTN_5
LCD_BL
BTN_1
BTN_6
BTN_7
AUDIO
C7 C8
10uF 0.1uF
U6
MAX98357AETE+T
DIN
GAIN_SLOT
SD_MODE
BCLK
LRCLK
OUTN
OUTP
R6
330
R18
0
CN2
ST-0322D00-071-1A2H
Speaker connector
H2
USB & Voltage protection
USB1
TYPE-C 16PIN 2MD(073)
SHELL
VBUS
SBU2
CC1
DN2
DP1
DN1
DP2
SBU1
CC2
D3
USBLC6-2SC6
R13
5.1k
R15
5.1k
Boot and reset
R12
10k
C14
1uf
TS-1187A-B-A-B
SW9
SW10
POWER
+5V
+BATT
DMG2301L-7
Q1
1N5819WS
D1
R3
10k
R7
0
VOUT
VIN
CE
VSS
NC
ME6217C33P5G
U3
C12
10uf
C3
10uf
C4
1M
R4
1M
R5
100nF
C5
BAT_READ
Battery connector
H1
R19
0
CHARGE
CHARGE_LED1
KT-0603R
U2
MCP73831-2ACI/MC
VDD
VBAT
STAT
PROG
NC
VSS
EP
R16
2K2
4.7uF
C9
R14
3k
C10
4.7uF
RGB LED
LED1
E6C1209RGBC3UDA
R8 30
R9 30
R10 120
Sheet: /
File: Untitled.kicad_sch
Title:
Size: A4
Date:
Rev:
KiCad E.D.A. kicad 7.0.7
Id: 1/2

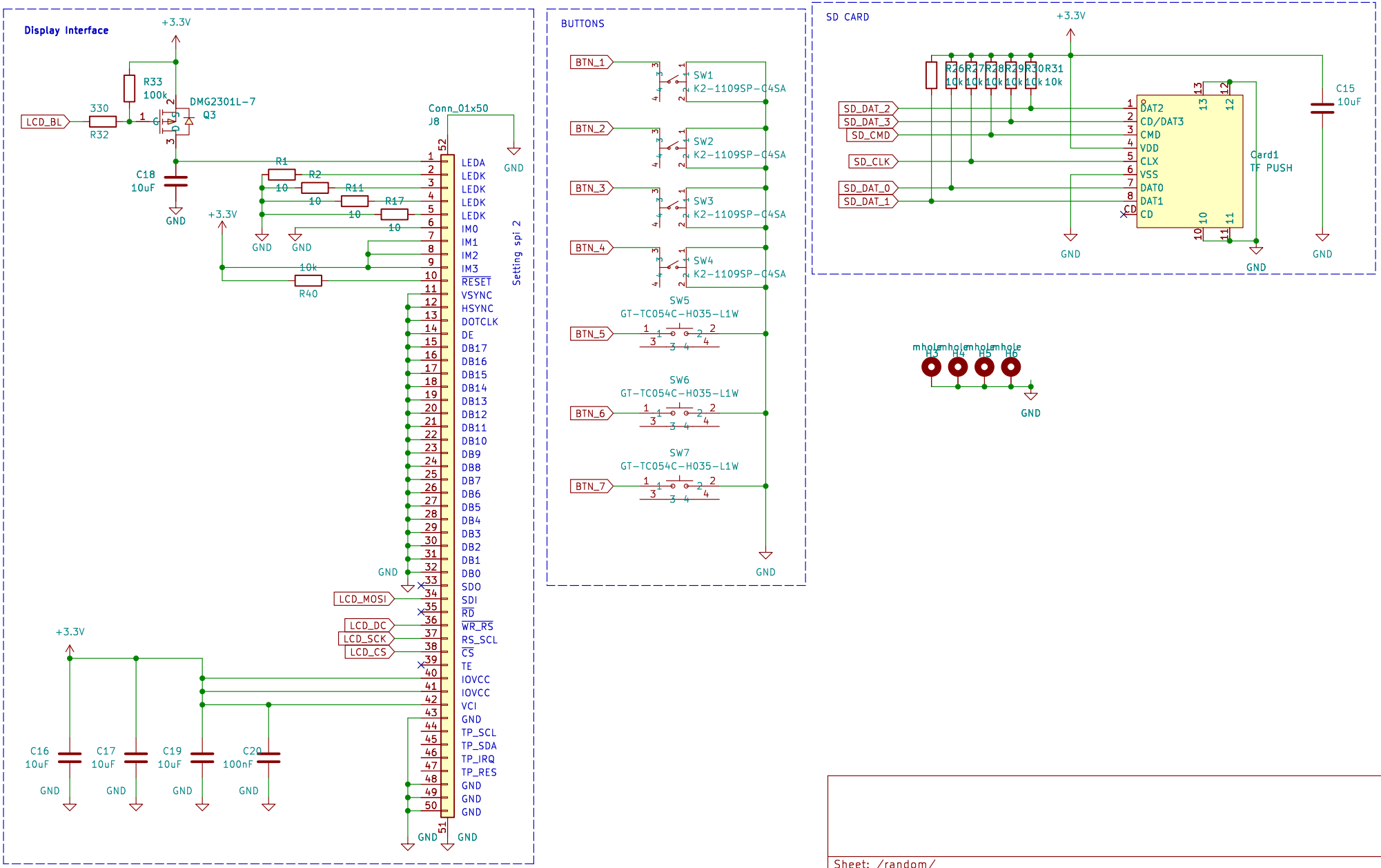

Sheet: /random/
File: random.kicad_sch

Title:

Size: A4	Date:	Rev:
KiCad E.D.A. kicad 7.0.7		Id: 2/2