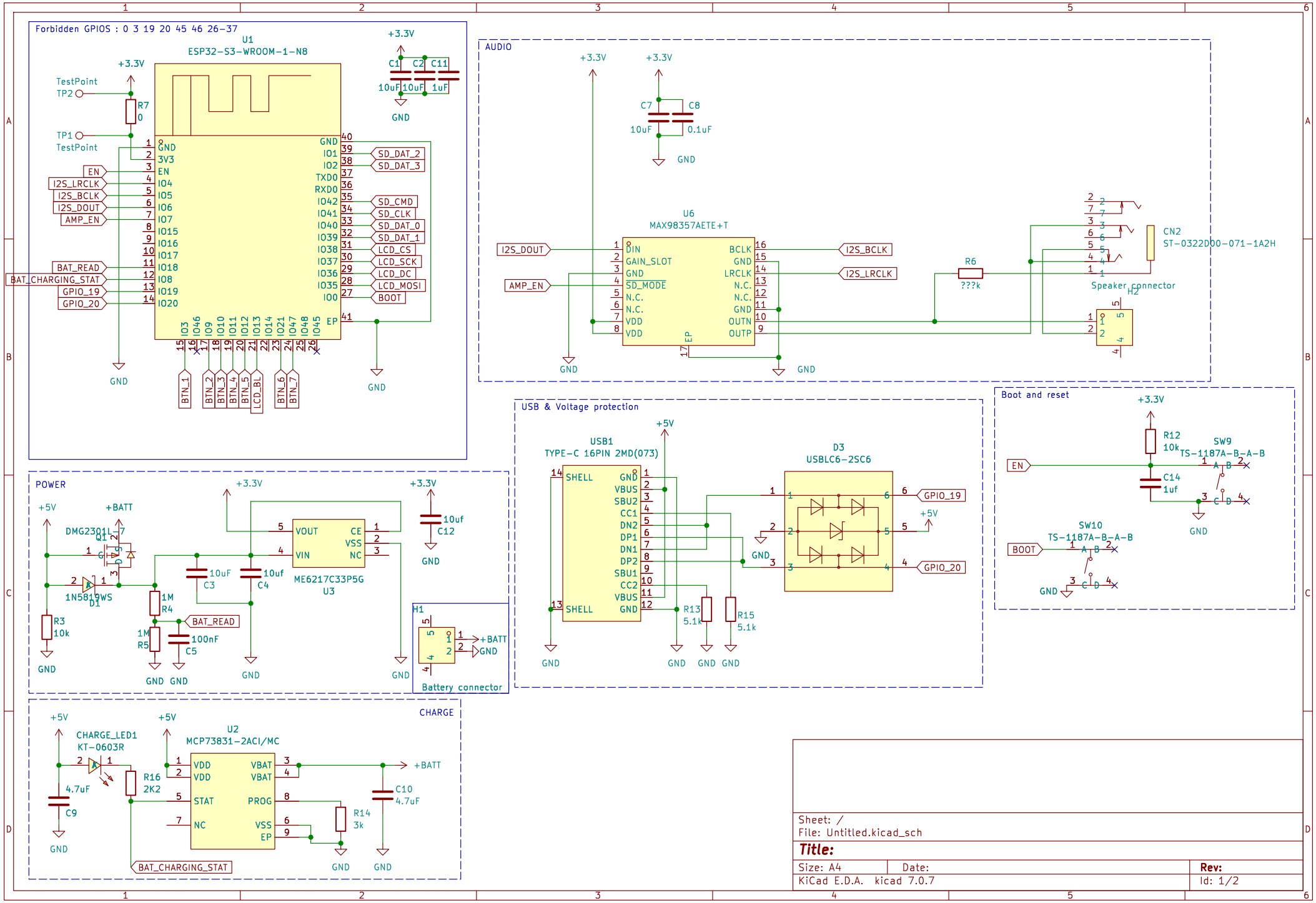

Sheet: /
File: Untitled.kicad_sch

Title:

Size: A4	Date:	Rev:
KiCad E.D.A. kicad 7.0.7		Id: 1/2

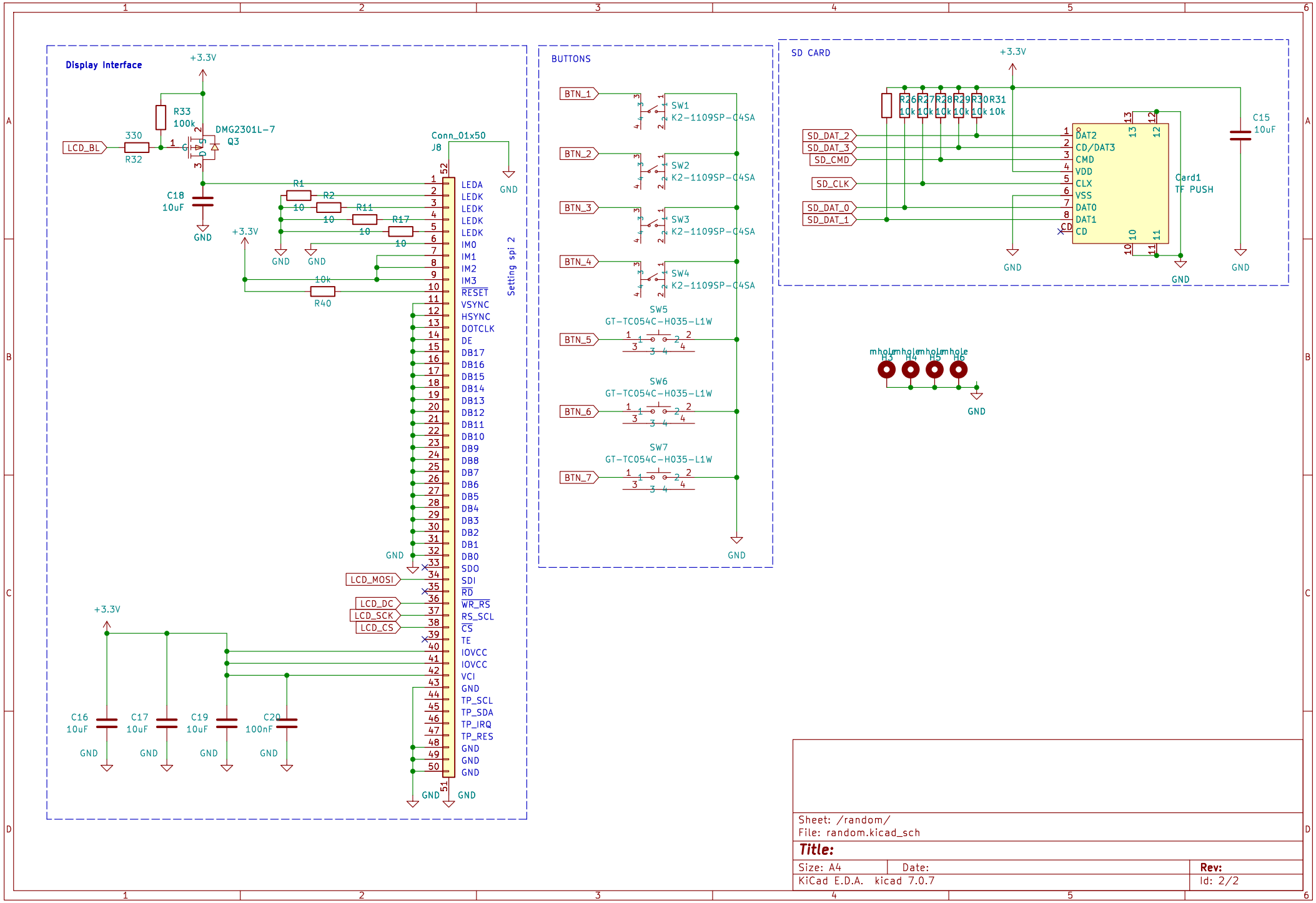

Sheet: /random/
File: random.kicad_sch

Title:

Size: A4	Date:	Rev:
KiCad E.D.A. kicad 7.0.7		Id: 2/2