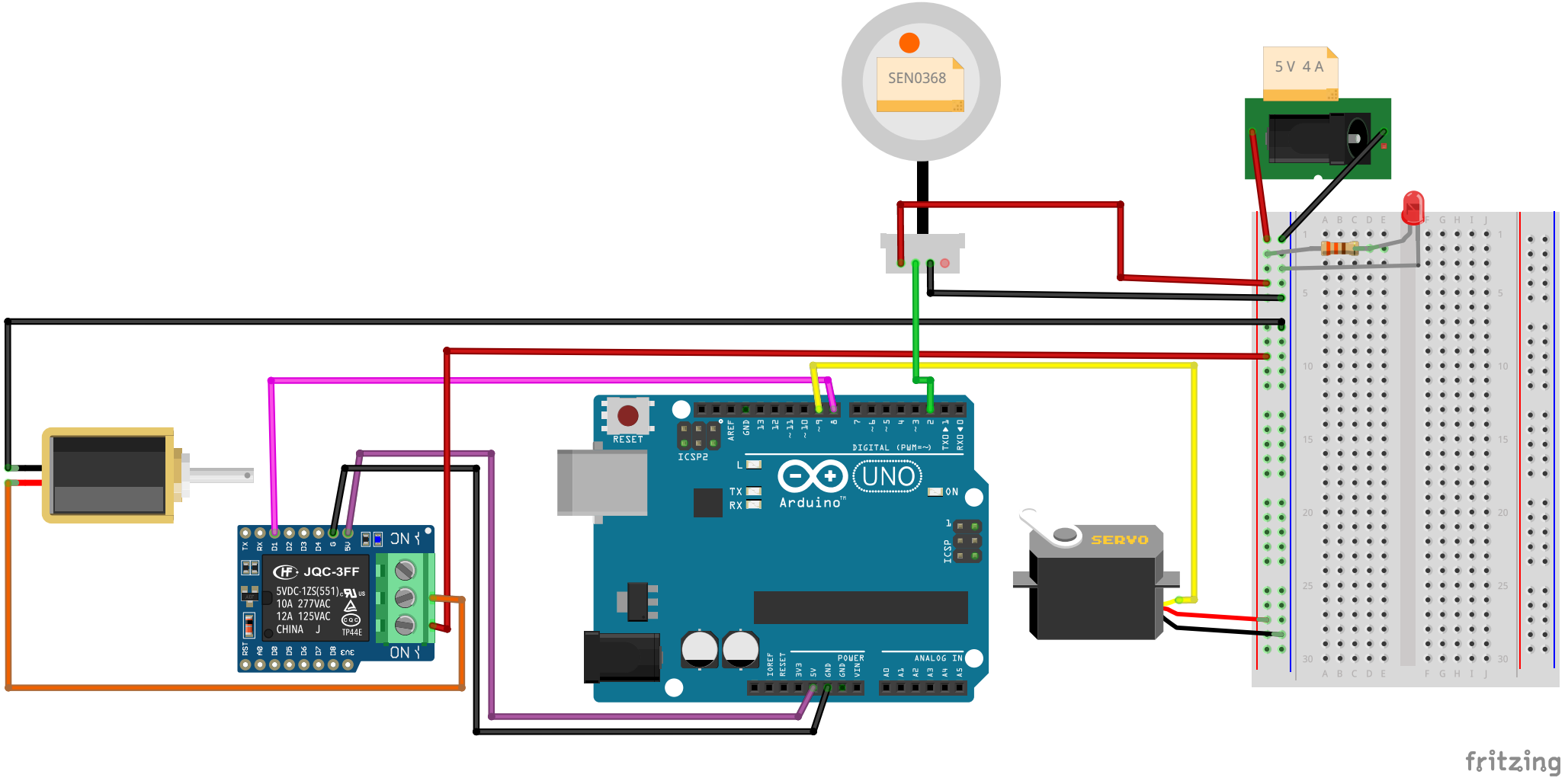
SEN0368
5 V 4 A
JQC-3FF
5VDC-1ZS(551)
10A 277VAC
12A 125VAC
CHINA J
TP44E
NC
NO
RESET
ICSP2
DIGITAL (PWM=~)
UNO
Arduino
ON
ICSP
SERVO
POWER
ANALOG IN
fritzing