Steering System Design Report

I. Rulebook Constraints

- Mechanical steering mechanism.
- All parts are metallic, except for the wheel.
- Steering angle constrained to the degree of rotation 30°.
- The steering wheel must be circular or elliptical, with a diameter between 8 and 10 inches.
- The rack and pinion system must not be used.

II. Steering Geometry

- The steering system is designed on the basis of the Ackermann steering principle to optimize wheel alignment during turns.
- The inner and outer wheels rotate at different angles, reducing tire scrubbing and improving maneuverability.
- The setup ensures smooth and predictable handling, providing better traction, and minimizing lateral forces on the tires.
- Specific steering angles are incorporated to enhance self-centering behavior and driver control.
- The kingpin inclination and caster angles are selected to balance the steering effort, stability, and responsiveness.
- The camber and toe settings are kept neutral to maximize tire contact and ensure consistent straight-line performance.
- The overall steering geometry provides stable behavior during both cornering and straight-line motion.

III. Design Considerations

- Steering Mechanism and Steering Effort: A four-bar linkage Ackermann steering geometry is used to ensure both front wheels turn at appropriate angles, minimizing tire slip and improving handling. Steering effort is minimized through optimized geometry, direct steering setup, and selection of kingpin and caster angles, ensuring quick response and self-centering behavior.
- Turning Radius: A turning radius of 2.6 meters was targeted to enable efficient navigation on tight racing circuits and practice tracks.
- Space Management, Ergonomics, and Safety: The steering system layout was developed to fit within the compact chassis while avoiding interference with structural elements and pedals. The steering wheel and column were positioned for driver comfort and natural posture. Mechanical simplicity and robust construction, with proper welding and bolting, enhance system reliability and driver safety.

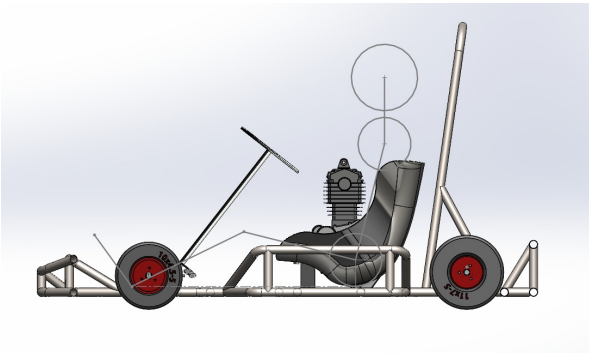

Fig. 1. Driver ergonomics and steering wheel positioning.

- Material Selection and Cost Optimization: Lightweight and strong materials like Aluminium 6061-T6 and SS-304 were selected to ensure structural integrity while minimizing weight. Standardized components were preferred to reduce manufacturing cost and simplify assembly and maintenance.
- Wheel Alignment and Steering Angles: Wheels are set parallel without toe-in or toe-out adjustments to ensure stable straight-line motion and predictable handling. A kingpin inclination of 10° and an adjustable caster angle were incorporated to decrease scrub radius, reduce steering effort, and promote self-aligning torque for returnability after cornering. The caster angle can be varied from -15° to 15° , allowing fine-tuning of steering response and handling characteristics based on driving conditions.

IV. Working Principle

The go-kart's steering system uses Ackermann steering geometry for efficient, precise cornering. The inner wheel turns sharper than the outer, allowing both to follow their circular paths with minimal tire scrubbing, reducing wear and improving handling. Steering input from the driver is transmitted through the steering column to a triangular plate, which moves tie rods connected to the steering arms. These rotate the spindles at different angles following the Ackermann principle.

To enhance steering feel and control, the design incorporates kingpin inclination and caster angle, reducing steering effort and providing self-aligning torque for easier return to center. Instead of a rack and pinion system, which regulations prohibit, a four-bar linkage

mechanism is used to achieve precise, independent wheel angles during cornering.

V. Dimension Parameters

TABLE I
STEERING DIMENSION PARAMETERS

Parameter	Value
Wheelbase (L)	1200 mm
Trackwidth Front (T)	1100 mm
Distance Between Kingpins (T')	780 m
Weight Distribution (Rear:Front)	60:40
CG Distance from Rear Axle	480 mm
Stub Axle Length	160 mm

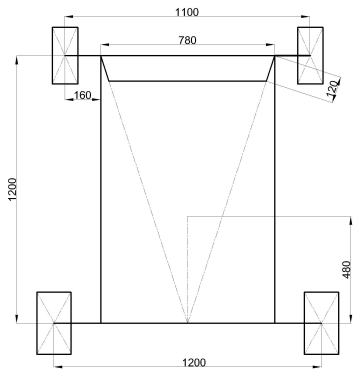

Fig. 2. Dimensions.

VI. Formulations and Calculations

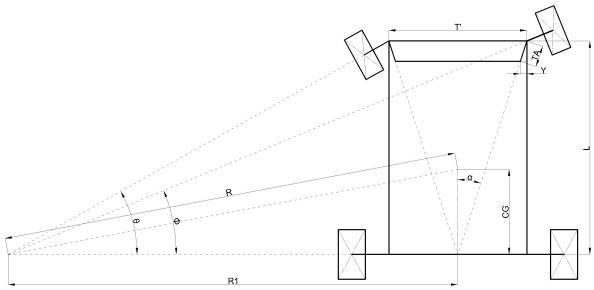

Fig. 3. Ackermann steering geometry

A. Steering Angles

$$\cot\phi - \cot\theta = \frac{T'}{L} = 0.65$$

Given: $T' = 780$ mm, $L = 1200$ mm
Turning radius $R = 2600$ mm (assumed).

$$R = \sqrt{CG^2 + R_1^2} \quad \Rightarrow \quad R_1 = 2555\,\text{mm}$$

$$\tan\theta = \frac{L}{R_1 - T'/2} \quad \Rightarrow \quad \theta = 28.99^\circ$$

$$\tan\phi = \frac{L}{R_1 + T'/2} \quad \Rightarrow \quad \phi = 22.16^\circ$$

Ackermann angle:

$$\text{Ackermann angle} = \tan^{-1}\left(\frac{\sin\phi - \sin\theta}{\cos\phi + \cos\theta - 2}\right) \quad \Rightarrow \quad 28.35^\circ$$

Ackermann Percentage:

$$\text{Ackermann } \% = \frac{Ackermann\ angle}{\theta} \times 100 = 97.8\%$$

B. Tie Rod Length

Tie arm length assumed $TA = 120$ mm:

$$\sin\alpha = \frac{Y}{TA} \quad \Rightarrow \quad Y = 57\,\text{mm}$$

Length of tie rod:

$$\text{Length} = \frac{T'}{2} - Y = 333\,\text{mm}$$

C. Steering Forces

Total mass $m = 180$ kg.
Normal force on front tire:

$$N = 72 \times 9.81 = 706.32\,\text{N}$$

Lateral force:

$$F_{\text{lateral}} = \frac{mv^2}{r} = 3987.69\,\text{N}$$

Tractive force:

$$F_{\text{tractive}} = \mu \times N = 494.43\,\text{N} \quad (\mu = 0.7)$$

Scrub radius:

$$\text{Scrub Radius} = 160 - \tan(10^\circ) \times 254 = 115.21\,\text{mm}$$

Steering ratio:

$$\text{Steering ratio} = \frac{\text{Steering Wheel Angle}}{\text{Average Tire Angle}} = \frac{50}{\frac{28.99+22.26}{2}} = 1.95$$

VII. Analysis of Different Components

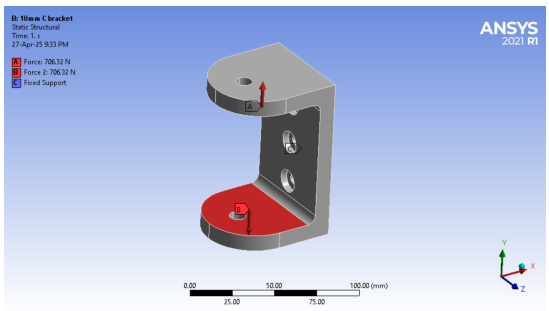

Fig. 4. Force and support positions of C Bracket

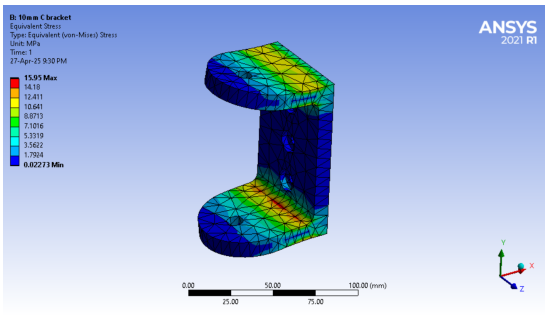

Fig. 5. Equivalent stress distribution in C Bracket

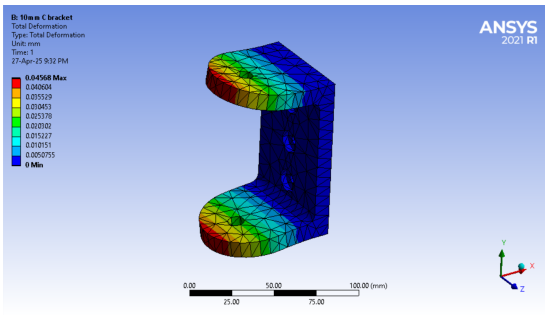

Fig. 6. Total deformation of C Bracket

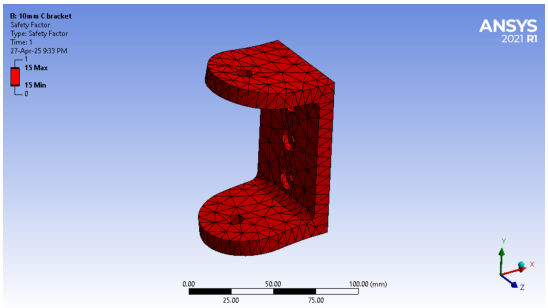

Fig. 7. Factor of Safety distribution in C Bracket

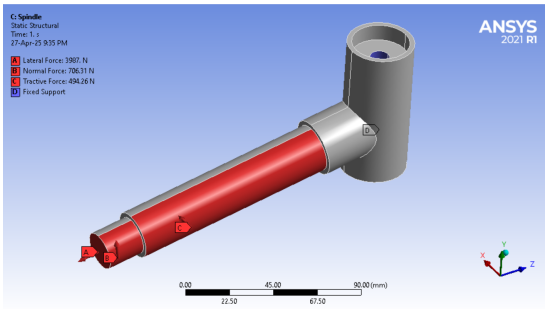

Fig. 8. Force and support positions of Spindle

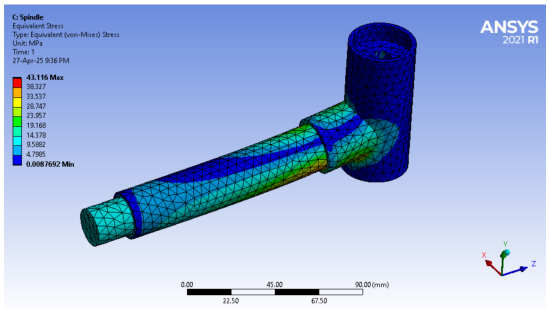

Fig. 9. Equivalent stress distribution in Spindle

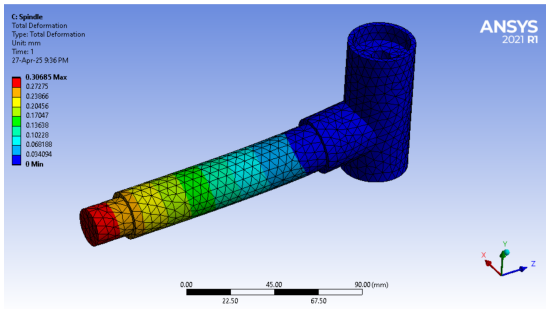

Fig. 10. Total deformation of Spindle

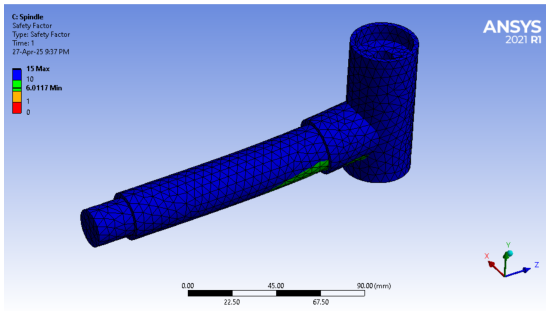

Fig. 11. Factor of Safety distribution in Spindle