TEAM 37

LAT Aerospace - Mid Term Submission

Multi-wing, blown-flap system leveraging the Coandă effect and Distributed Electric Propulsion (DEP) for high-lift STOL operation

MID TERM REPORT

(Note: Italicized words/sentences throughout the report can be clicked on to be redirected to a further elaborate explanation of the topic discussed.)

Executive Summary

This report presents the analytical and numerical computational design of a multi-element, blown-flap system leveraging the Coandă effect and Distributed Electric Propulsion (DEP) to achieve extreme lift at low speeds.
The objective in mind was to design a coupled wing-propulsion configuration capable of meeting or exceeding the target lift coefficient C_L of 6.5-8.0 while maintaining aerodynamic and structural feasibility within the defined boundary conditions, as well as adhering to weight and power budgets.

Design motivation and approach
The problem statement was approached in two tiers:

1. **Passive optimization-** the geometric and aerodynamic refinement through the selection and coupling of airfoils, as well as using high lift devices such as slats and flaps.
2. **Active optimization-** Lift augmentation by using propulsive blowing through a closed duct geometry.

In the passive stage, multiple airfoils were evaluated using code, analytical tools, and airfoil databases. The **NACA 4412** airfoil was chosen as the primary lifting element due to its favorable performance at moderate Reynolds numbers and its gentle stall behavior, *among other considerations*. The **S1223** high-cambered airfoil was selected as the secondary element to delay separation and increase the slope of the effective lift curve.
Therefore, a two-element configuration comprising the two airfoils was then optimized through *simulations and established theories* to predict the location of the aerodynamic center, C_L, and C_M. Then the aforementioned high-lift devices such as flaps and slats were considered analytically, forming the foundation for the active (i.e., blown) configuration.

Active Lift Configuration and Propulsion Integration
Building on the passive configuration, a blown-flap mechanism utilizing the Coandă effect was incorporated to further enhance lift. A closed-duct channel within the wing directs high-velocity jets along the upper surface, maintaining attached flow even at high angles of attack.
The propulsion architecture employs Distributed Electric Propulsion (DEP), using multiple small propellers mounted along the wing span. This configuration is then optimized for generating maximum thrust and favorable spanwise velocity gradients, effectively energizing the boundary layer and minimizing propwash and other unfavorable after-effects.
The analytical modeling combines:

1. Circulation theory-based lift augmentation calibrated from literature (such as circulation and momentum theory of lift) and CFD,
2. Actuator-Disk and Blade Element Theories for propeller thrust and induced-flow estimation
3. Coupled aerodynamic and propulsive models capturing wing-prop interaction and flowfield uniformity.

Three-Dimensional and Structural Assessment
Finite-wing corrections using Prandtl's lifting-line theory were implemented to translate 2-D coefficients

into 3-D wing performance. A simplified beam-bending model was used to estimate bending moments and deflections under the integrated aerodynamic and propulsive loads. The analysis confirmed that load levels remain within feasible material limits for the projected weight budget, with potential for further optimization via composite spar design.

Overall deliverables

The mid-term phase delivers:

1. A validated analytical framework coupling aerodynamics, propulsion, and structure;
2. A set of propeller–wing configurations ranked by efficiency, lift coefficient, and power consumption;
3. Preliminary CFD validation for the analytical predictions; and
4. A roadmap toward detailed numerical optimization and experimental verification in the end-term phase.

This work demonstrates a practical pathway to powered-lift performance using low-complexity analytical tools, supporting the development of compact, and efficient STOL wing systems for next-generation aerial platforms.

Contents

Executive Summary **1**

1 Airfoil Selection **7**
1.1 Preliminary Selection . . . 7
1.1.1 Computational Screening . . . 7
1.1.2 Literature Review and Candidate Analysis . . . 7
1.2 Trade-offs and Final Selection . . . 8

2 Preliminary Analysis using Thin Airfoil Theory **9**
2.1 Simple Airfoil Analysis . . . 9
2.1.1 Theoretical Foundation . . . 9
2.1.2 Python Code Implementation . . . 10
2.1.3 Results . . . 10
2.2 Incorporating Trailing Edge (TE) Flaps . . . 11
2.2.1 Theoretical Foundation . . . 11
2.2.2 Python Code Implementation . . . 12
2.2.3 Results and Analysis . . . 12

3 Shortcomings of TAT **14**
3.1 Fails to Predict Drag (D'Alembert's Paradox) . . . 14
3.2 Cannot Predict Stall ($C_{L,max}$) . . . 14
3.3 Ignores Airfoil Thickness . . . 14
3.4 Only for Low-Speed (Incompressible) Flight . . . 14
3.5 It is Strictly 2D (Infinite Wing) . . . 15

4 Analysis using Circulation Theory (Vortex Panel Method) **16**
4.1 Circulation Theory (Kutta–Joukowski Theorem) . . . 16
4.2 The Vortex Panel Method (VPM) . . . 16
4.3 Advantages of VPM over TAT . . . 16
4.4 Aerodynamic Coefficients . . . 17
4.5 Code Implementation and Validation via XFLR5 . . . 17

5 Incorporation of High-Lift Devices **21**
5.1 Leading Edge Slats . . . 21
5.2 Trailing Edge Flaps . . . 21
5.2.1 Types and Mechanisms . . . 21
5.3 Synergistic Effects on C_l vs. α Graph . . . 21
5.4 Methods for Multi-Element Systems . . . 22

6 CFD Analysis of a single airfoil, and multi element airfoil **23**
6.1 Rationale for CFD . . . 23
6.2 Stage 1: Single Airfoil Validation (Baseline Case) . . . 23
6.3 Stage 2: Incremental Multi-Element Analysis . . . 23
6.3.1 Single Slotted Flap . . . 23
6.3.2 Double Slotted Flap . . . 23
6.4 Stage 3: Full High-Lift System (Slat + Flaps) . . . 23
6.5 Simulation Parameters and Setup . . . 24
6.6 Challenges, Setbacks, and Future Work . . . 26

7 Propulsion system **27**
7.1 Introduction . . . 27
7.2 Thrust Device . . . 27
7.3 Blown Effect . . . 28
7.3.1 Distributed Electric Propulsion . . . 28
7.3.2 Electric ducted fans . . . 28
7.4 Ways for blown effects: . . . 28
7.5 Increase in Lift due to Blown jet configuration . . . 28
7.6 Theoratical and analytical simulations . . . 29
7.7 The lift on a Thin Aero Foil with Jet-Augmented Flap . . . 29
7.8 Our Innovation: . . . 31
7.9 Area to look into . . . 32
7.10 The problem has design constrains . . . 32
7.11 Thrust distribution . . . 32
7.11.1 Configuration of thrust and blown devices . . . 32
7.12 Future Works . . . 34

8 Preliminary 3D geometry of the aircraft **35**
8.1 Correction of Lift and Drag Coefficients for Finite Wings . . . 35
8.1.1 Introduction . . . 35
8.1.2 Correction for Lift-Curve Slope . . . 35
8.1.3 Correction for Drag Coefficient . . . 35
8.1.4 Typical Parameter Ranges . . . 36
8.1.5 Typical Lift-Curve Slopes for Finite Wings . . . 36
8.1.6 Practical Implications . . . 36
8.2 Wing Design Strategy Report . . . 37
8.2.1 Objective . . . 37
8.2.2 Design strategy . . . 37
8.2.3 Choice of planform geometry . . . 37
8.2.4 Mathematical justification and key formulae . . . 38
8.2.5 Selected planform parameters . . . 38
8.2.6 Practical implications from our approach (design-perspective) . . . 38
8.3 Fixing Wing Planform Geometry and Aspect Ratio for STOL Aircraft . . . 40
8.3.1 Abstract . . . 40
8.3.2 Introduction . . . 40
8.3.3 Design Considerations for STOL Aircraft . . . 40
8.3.4 Planform Geometry Parameters . . . 40
8.3.5 Aspect Ratio Derivation . . . 40
8.3.6 Aerodynamic Performance Relations . . . 40
8.3.7 Parametric Study of Aspect Ratio . . . 41
8.3.8 Optimization and Practical Trade-Offs . . . 41
8.3.9 Taper Ratio Considerations . . . 41
8.4 Wing Sweep and Dihedral Angle Considerations for STOL Aircraft Design . . . 42
8.4.1 Introduction . . . 42
8.4.2 Sweep Angle . . . 42
8.4.3 Dihedral Angle and Lateral Stability . . . 42
8.4.4 Wing Configuration . . . 42
8.4.5 Real-World STOL Aircraft Examples . . . 43
8.4.6 Summary of Design Recommendations . . . 43
8.5 Horizontal Tail Design Report for High-Wing STOL Aircraft . . . 44
8.5.1 Introduction . . . 44
8.5.2 Assumptions . . . 44
8.5.3 Longitudinal Trim Condition: . . . 44
8.5.4 Horizontal Tail Volume Coefficient . . . 45

8.5.5 Tail Airfoil Selection . . . 45
8.5.6 Tail Incidence Angle . . . 45
8.5.7 Tail Geometry . . . 45
8.5.8 Mean Aerodynamic Chord . . . 45
8.5.9 Tail Arm Selection . . . 46
8.5.10 Design Guideline . . . 46
8.5.11 Parameter Selection Summary . . . 46

9 The Multhopp Method **47**
9.1 Theoretical Foundation . . . 47
9.1.1 Fundamental Flow Equations . . . 47
9.1.2 Derivation of the Downwash Integral . . . 48
9.1.3 Kutta-Joukowsky Constraint . . . 48
9.2 Chordwise Integration and Influence Functions . . . 48
9.2.1 Auxiliary Coordinates and Load Distribution . . . 48
9.2.2 Influence Functions $i(X, Y)$ and $j(X, Y)$ . . . 49
9.3 Spanwise Discretization and Angular Transformation . . . 49
9.3.1 Angular Coordinate Transformation . . . 49
9.3.2 Boundary Coordinates and Nondimensional Parameters . . . 49
9.4 Spanwise Integration and Linear System Formulation . . . 49
9.4.1 Interpolation Function . . . 49
9.4.2 Downwash Integral in Angular Coordinates . . . 50
9.4.3 Interpolation-based Downwash Integral . . . 50
9.4.4 Linear Algebraic Formulation and Singularity Correction . . . 50
9.5 Resultant Aerodynamic Quantities . . . 51
9.5.1 Total Lift Coefficient . . . 51
9.5.2 Induced Drag Coefficient . . . 51
9.6 Application to Discontinuous Boundary Conditions (Flaps) . . . 51
9.6.1 Equivalent Incidence Concept . . . 51
9.7 Remarks . . . 52

10 Structural Analysis **53**
10.1 Overview . . . 53
10.2 Beam Model and Governing Equations . . . 53
10.3 Simplified Constant–Curvature Approximation . . . 53
10.4 Root Bending Moment Derivation . . . 53
10.5 Airfoil Area and Second Moment of Area . . . 54
10.6 Numerical Evaluation . . . 54
10.7 Torsional Response via Bredt–Batho Theory . . . 55

11 Business & Regulatory Feasibility **56**
11.1 Energy Storage and Propulsion Economy . . . 56
11.2 Certification and Regulatory Pathways . . . 56
11.3 Operating Cost and Economics . . . 56
11.4 Business Route to Market . . . 57

12 Acoustic and Vibration Technical Analysis **58**
12.1 The Big Picture . . . 58
12.2 Foundations of aerodynamic noise . . . 58
12.2.1 Practical comments . . . 58
12.3 FW–H acoustic integral (propeller tonal and loading noise) . . . 58
12.3.1 Design Consequences . . . 59
12.4 Airfoil self-noise and trailing-edge models (Amiet / BPM) . . . 59
12.4.1 Implications for multi-element wings and slats . . . 59
12.5 Jet noise scaling and Coandă/blown-flap noise . . . 59

12.6 Tonal components (propeller blade-pass tones) and coherence 60
12.7 Integrated noise optimization levers (analytic summary) 60
12.8 Structural vibration and forced response 60
12.8.1 Design checks and metrics 60
12.9 Aeroelastic instabilities: flutter and whirl 61
12.9.1 Practical procedure 61
12.10 Practical CFD / Experimental acoustics program (recommended tasks) 61

1 Airfoil Selection

1.1 Preliminary Selection

The primary aerodynamic objective for a Short Takeoff and Landing (STOL) aircraft is the maximization of the lift coefficient, $C_{L,max}$. A higher $C_{L,max}$ directly reduces the aircraft's stall speed (V_{stall}), as defined by the lift equation:

$$V_{stall} = \sqrt{\frac{2W}{\rho S C_{L,max}}}$$

This is the critical factor in minimizing both takeoff and landing distances. The selection process was therefore focused on identifying airfoils with proven, state-of-the-art high-lift performance within the relevant operational envelope.

The process has a mixture of computational screening methods and intensive literature review to arrive at the required lift and to provide the best possible solutions.

1.1.1 Computational Screening

A Python script was developed to programmatically parse the UIUC Airfoil Coordinates Database (UIUC ACD), which is the standard public-domain repository for airfoil geometries [52]. The script was designed to filter this extensive database (containing over 1,500 airfoils) by cross-referencing geometric data with associated experimental performance data. The key filtering metric was the documented $C_{L,max}$ at a Reynolds number (Re) range characteristic of STOL operations (e.g., $Re = 2 \times 10^5$ to 1×10^6). This computational pass provided an unbiased, data-driven long list of potential candidates, highlighting several high-camber and specialized airfoil families.

1.1.2 Literature Review and Candidate Analysis

The computational results were corroborated by an in-depth literature review, which revealed a strong convergence on two specific airfoils as benchmarks for high-lift applications: the NACA 4412/4415 and the Selig S1223.

NACA 44XX Series (e.g., 4412, 4415): This family of airfoils originates from the foundational work of the National Advisory Committee for Aeronautics (NACA) in the 1930s. The "44" designation indicates a maximum camber of 4% of the chord located at 0.4c (40% chord) [38]. This forward-loaded camber profile is highly effective at generating lift. It creates a broad region of favorable pressure gradient over the leading 40% of the airfoil, which helps maintain attached flow and achieve a respectable $C_{L,max}$ in the range of 1.6–1.7 at moderate Reynolds numbers [44]. However, the NACA 4-digit series airfoils were designed when the influence of the Reynolds number was not fully understood. Their performance is known to degrade at lower Reynolds numbers ($Re < 5 \times 10^5$), and they can exhibit a relatively sharp stall characteristic [40]. This abrupt loss of lift can be undesirable from a flight dynamics and safety perspective.

Selig S1223: This is a modern, specialized airfoil designed by Dr. Michael Selig's team at the University of Illinois at Urbana-Champaign, specifically for high-lift, low-Reynolds-number applications [48]. Its geometry is characterized by a significant thickness (12.1% c) and, most critically, a highly concave lower surface that creates an aft-loaded pressure distribution with a pronounced trailing-edge "cusp" [50]. This unique design is optimized to manage the laminar separation bubbles that dominate low-Re flow. The S1223's pressure distribution allows it to maintain attached flow over an exceptionally wide range of angles of attack, resulting in a phenomenal $C_{L,max}$ of approximately 2.2 at $Re = 2 \times 10^5$, a value that can exceed 2.4 at $Re = 3 \times 10^5$ [41]. This unparalleled lift generation has made it a dominant airfoil in STOL-focused competitions, such as the SAE Aero Design competition [4].

1.2 Trade-offs and Final Selection

The choice between these two candidates represents a classic engineering trade-off:

- **Aerodynamic Performance:** The S1223 offers a clear and significant advantage in raw $C_{L,max}$, potentially reducing the required wing area or takeoff speed compared to the NACA 4412.
- **Pitching Moment:** This superior lift comes at a cost. The S1223's extreme aft-loading generates a very large nose-down pitching moment (C_m) on the order of -0.20 to -0.25 [48]. This moment must be balanced by a larger horizontal tail, which in turn imposes a significant trim drag penalty, potentially offsetting some of the lift gains, particularly in the cruise phase. The NACA 4412 has a much more benign C_m (approx. -0.09).
- **Stall & Manufacturing:** The NACA 4412 has a sharper, less forgiving stall. The S1223 has a "softer" stall but its thin, concave trailing edge can be difficult to manufacture accurately, and its performance is highly sensitive to fabrication imperfections [50].

Given this analysis, both airfoils were shortlisted. The NACA 4412 was selected as the robust, well-understood, and structurally-benign baseline. The S1223 was selected as the high-performance, high-risk candidate. The subsequent analyses in this report (TAT, VPM, XFLR5) are intended to precisely quantify these performance trade-offs and to converge at a final design using these airfoils.

2 Preliminary Analysis using Thin Airfoil Theory

2.1 Simple Airfoil Analysis

To establish a theoretical baseline and validate first principles, the shortlisted airfoils (NACA 4412 and S1223) were first analysed using classical Thin Airfoil Theory (TAT). This analytical approach, while limited in its assumptions, is critical for developing an intuitive understanding of how camber and angle of attack independently contribute to lift.

2.1.1 Theoretical Foundation

Thin Airfoil Theory is a foundational pillar of aerodynamics, first fully developed by Hermann Glauert [10]. It models 2D, inviscid, incompressible (potential), and irrotational flow [13]. Its central simplification, the "thin" approximation, assumes that the airfoil's maximum thickness (t/c) and maximum camber (z_{max}/c) are small compared to the chord length.

This approximation allows the complex flow-tangency boundary condition (which states that flow cannot pass through the airfoil surface) to be linearized and applied to the mean camber line, $z(x)$, rather than the airfoil's actual surface [37]. The airfoil's lift and moment are then modeled by placing a continuous vortex sheet, $\gamma(x)$, along its chord line. The strength of this sheet is calculated to ensure the resultant flow (freestream + induced velocity from the vortex sheet) is only tangent to the camber line at every point [5]. This relationship is captured in the fundamental equation of Thin Airfoil Theory:

$$\frac{1}{2\pi}\int_0^c \frac{\gamma(\xi)}{x-\xi}d\xi = V_\infty\left(\alpha - \frac{dz}{dx}\right)$$

This is a singular integral equation that relates the unknown vortex strength $\gamma(\xi)$ to the freestream velocity V_∞, the angle of attack α, and the local slope of the camber line dz/dx [39].

Glauert's solution [10] solves this equation by applying a coordinate transformation $x = (c/2)(1-\cos\theta)$ and representing the camber line's slope and the vortex strength as Fourier series:

$$\text{Vortex Strength: } \gamma(\theta) = 2V_\infty\left(A_0\frac{1+\cos\theta}{\sin\theta} + \sum_{n=1}^{\infty} A_n \sin(n\theta)\right)$$

$$\text{Camber Slope: } \frac{dz}{dx} = (A_0 - \alpha) + \sum_{n=1}^{\infty} A_n\cos(n\theta)$$

By integrating the vortex strength $\gamma(x)$ over the chord, we derive the following key aerodynamic coefficients:

Lift Coefficient (C_l): The theory predicts a perfectly linear lift curve. The total lift coefficient is the sum of the lift due to angle of attack and the lift due to camber.

$$C_l = \pi(2A_0 + A_1)$$

By substituting the Fourier coefficients A_0 and A_1, which are determined by the camber line geometry, this is more commonly expressed as:

$$C_l = \underbrace{2\pi\alpha}_{\text{Lift from AoA}} + \underbrace{\int_0^\pi \frac{dz}{dx}(\cos\theta - 1)d\theta}_{\text{Lift from Camber}}$$

This leads to the familiar form $C_l = 2\pi(\alpha - \alpha_{L=0})$, where the zero-lift angle of attack is determined entirely by the airfoil's camber:

$$\alpha_{L=0} = -\frac{1}{\pi}\int_0^\pi \frac{dz}{dx}(\cos\theta - 1)d\theta$$

Moment Coefficient (about Quarter-Chord, $C_{m,c/4}$): A profound result of TAT is that the pitching moment coefficient about the quarter-chord ($x = c/4$) is constant and independent of both angle of attack and lift. This proves that the aerodynamic center (X_{ac}) is located at the quarter-chord.

$$C_{m,c/4} = \frac{\pi}{4}(A_2 - A_1)$$

where A_1 and A_2 are the first two Fourier coefficients describing the camber line shape. For a symmetric airfoil ($dz/dx = 0$), $A_1 = A_2 = 0$, and $C_{m,c/4} = 0$.

Aerodynamic Center (X_{ac}): Since $\frac{dC_{m,c/4}}{dC_l} = 0$, the aerodynamic center is defined as:

$$X_{ac} = \frac{c}{4}$$

2.1.2 Python Code Implementation

A Python script was developed to apply this theory to any airfoil given its coordinate file. The script's logic is as follows:

- **Input & Geometry Processing:**
  - Reads input in a 2 different .dat coordinate files sorted into top and bottom surface coordinates and interpolates the upper and lower surface coordinates (x_u, y_u) and (x_l, y_l).
  - Calculates the mean camber line $z(x) = (y_u + y_l)/2$ at discrete x stations.
- **Numerical Differentiation:**
  - Calculates the camber line slope dz/dx at each station using a finite difference scheme.
- **Numerical Integration:**
  - Applies the coordinate transformation $x = (c/2)(1 - \cos\theta)$ to the dz/dx data.
  - Uses the integrate functions to numerically solve the integrals for $\alpha_{L=0}$, $C_{m,c/4}$ and $\alpha_{L=0}$.
- **Output:** Generates the key theoretical coefficients and plots.

2.1.3 Results

The code was executed for the NACA 4412, Selig 1223 and, as a control, a NACA 0012 (symmetric) airfoil.

Figure 1: This is a figure caption, note how it appears underneath the figure.

- **C_l vs. α Graph:** The code generated the expected linear C_l vs. α plots.
  - For the NACA 0012, $\alpha_{L=0}$ was correctly calculated as $0°$.
  - For the NACA 4412, with its 4% camber, the code calculated a zero-lift angle $\alpha_{L=0} \approx -4.1°$, which is consistent with its designation [1].
  - For both airfoils, the lift-curve slope ($dC_l/d\alpha$) was verified to be 2π per radian (or ≈ 0.11 per degree), the universal constant predicted by TAT [13].
  - For the S1223, $\alpha_{L=0}$ was correctly calculated as $0°$.
  - For the S1223, the code calculated a zero-lift angle $\alpha_{L=0} \approx -14.38°$, which is an overestimation of the actual $\alpha_{L=0}$ [1].
  - For all airfoils, the lift-curve slope ($dC_l/d\alpha$) was verified to be 2π per radian (or ≈ 0.11 per degree), the universal constant predicted by TAT [13].

- C_m **vs.** α **Graph:** The code produced a horizontal line for $C_{m,c/4}$, verifying that the aerodynamic center is at the quarter-chord.
  - For the NACA 0012, $C_{m,c/4} = 0$.
  - For the NACA 4412, the code calculated $C_{m,c/4} \approx -0.106$, a significant nose-down moment consistent with experimental data [1].
  - For the S1223, the code calculated $C_{m,c/4} \approx -0.395$, [1].

This exercise assisted in analyzing and understanding first principles. This theoretical baseline is essential for appreciating the higher-fidelity results from the Vortex Panel Method (Section IV), which will account for thickness, and for quantifying the severe limitations of TAT (Section III).

2.2 Incorporating Trailing Edge (TE) Flaps

To analyze the primary high-lift device, the analysis was extended to model a plain trailing-edge flap using Thin Airfoil Theory (TAT). This is the simplest and most fundamental high-lift augmentation, and TAT provides a powerful analytical solution for its effects and can provide a rough estimation to quantify a flap's performance.

2.2.1 Theoretical Foundation

Within the framework of TAT, a simple flap is modeled as a discrete change in the mean camber line's slope [10]. The airfoil is assumed to be hinged at a point x_f (the flap hinge chord location) and deflected by an angle δ.

This deflection δ is treated as a small angle. The boundary condition in the fundamental equation of TAT is modified: the flow must be tangent to the main airfoil segment for $0 \leq x \leq x_f$ and tangent to the deflected flap segment for $x_f \leq x \leq c$ [13].

The solution methodology remains the same (using Glauert's Fourier series expansion [10]), but the additional camber "kink" from the flap introduces new terms. The key insight is that the flap's effect can be linearly superimposed onto the basic airfoil's aerodynamics [45]. The total lift and moment are the sum of the unflapped airfoil's characteristics plus the increments (ΔC_l and ΔC_m) generated by the flap deflection δ.

The theory yields the following exact analytical solutions for these increments:

Lift Increment ($C_{l\delta}$): The change in lift coefficient is directly proportional to the flap deflection angle δ.

$$\Delta C_l = C_{l\delta} \cdot \delta$$

where $C_{l\delta}$ is the flap lift effectiveness (in units of per-radian or per-degree). Its value is a function of the hinge-point location x_f only:

$$C_{l\delta} = 2\int_{\theta_f}^{\pi} \frac{1+\cos\theta}{\sin\theta} \sin\theta d\theta = 2(\pi - \theta_f + \sin\theta_f)$$

Here, θ_f is the angular coordinate corresponding to the hinge point, defined by the transformation $x_f/c = (1/2)(1-\cos\theta_f)$ [39].

The total lift coefficient for the flapped airfoil at an angle of attack α is:

$$C_l = 2\pi(\alpha - \alpha_{L=0,\text{unflapped}}) + C_{l\delta}\delta$$

Moment Increment ($C_{m\delta}$): Similarly, the flap deflection introduces a large nose-down pitching moment increment about the quarter-chord.

$$\Delta C_{m,c/4} = C_{m\delta} \cdot \delta$$

The flap moment effectiveness, $C_{m\delta}$, is also a function of x_f only:

$$C_{m\delta} = \frac{dC_m}{d\delta} = -\frac{1}{2}\int_{\theta_f}^{\pi} (1+\cos\theta)(\cos\theta - \cos\theta_f) d\theta$$

A more common form from integration is $C_{m\delta} = -\frac{1}{2}\left[\sin(2\theta_f) - 2\sin\theta_f\right]$ [37].

The total moment coefficient about the quarter-chord is:

$$C_{m,c/4} = C_{m,c/4\ (\text{unflapped})} + C_{m\delta}\delta$$

Note that since $dC_m/d\alpha$ remains unchanged, the aerodynamic center (X_{ac}) is still predicted to be at $c/4$ [13].

2.2.2 Python Code Implementation

The Python script from Section II.a was modified to incorporate this analysis.

- **New Inputs:** The script now accepts the flap hinge location (x_f/c).
- **Calculation:**
  - It computes the hinge-point angle $\theta_f = \arccos(1 - 2x_f/c)$.
  - It calculates the constants $C_{l\delta}$ and $C_{m\delta}$ using the formulas above.
  - Considers a range of delta to plot $C_{l\delta}$ and effectiveness of the fin ϵ_f vs δ.
- **Output Generation:** For each δ in the input list, the script computes the new $\alpha_{L=0}$ and the new $C_{m,c/4}$ and plots the resulting C_l vs. α and C_m vs. α curves on a family of graphs.

2.2.3 Results and Analysis

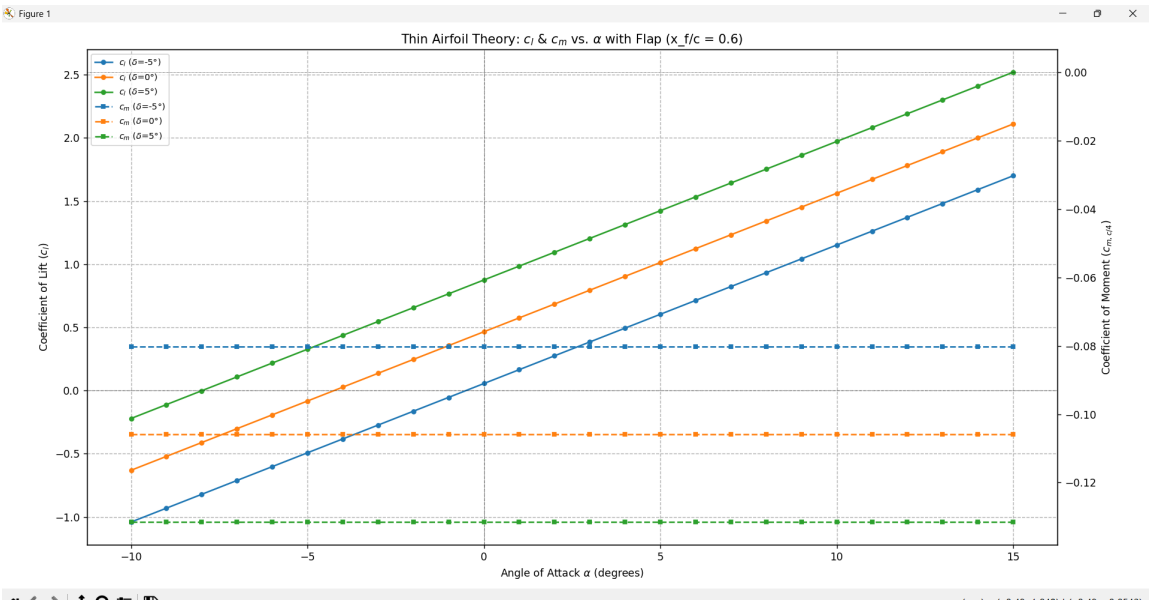

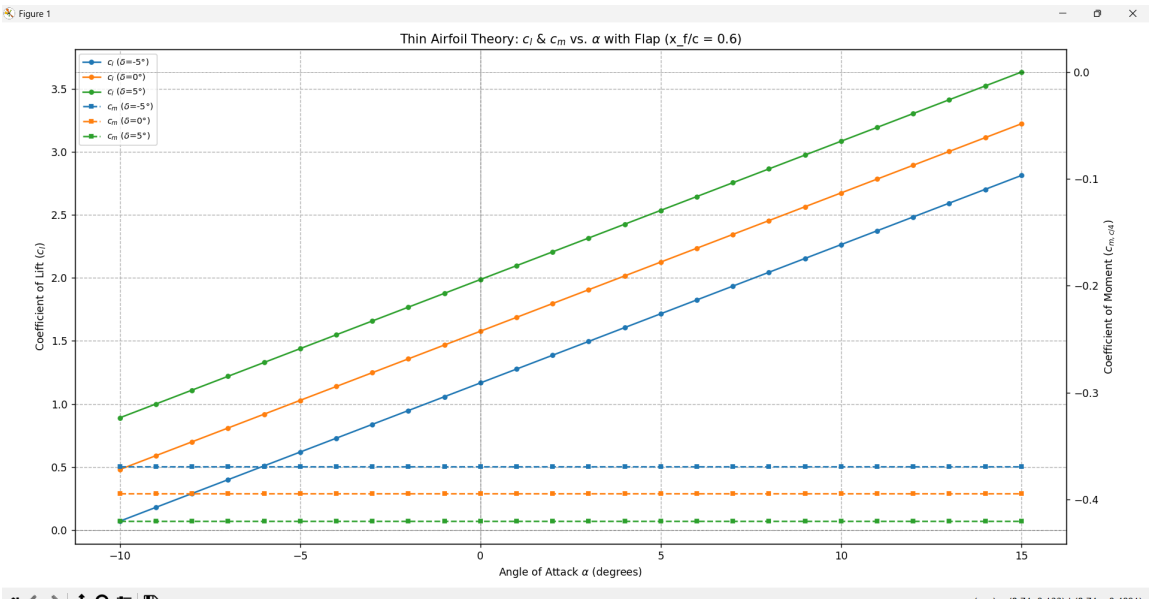

The resulting graphs clearly illustrate the two primary effects of a plain trailing-edge flap:

- **Lift Curve Shift:** The entire C_l vs. α curve is shifted upwards and to the left.
  - **Upward Shift:** At any given α, the C_l is increased by $\Delta C_l = C_{l\delta}\delta$. This is the primary lift-enhancing effect.
  - **Leftward Shift:** The zero-lift angle of attack becomes more negative. The new $\alpha_{L=0,\text{flapped}}$ is given by $\alpha_{L=0,\text{flapped}} = \alpha_{L=0,\text{unflapped}} - (C_{l\delta}\delta/2\pi)$.
  - **Constant Slope:** The lift-curve slope $(dC_l/d\alpha)$ remains 2π. TAT correctly predicts that a flap is a "lift-generating" device, not a "slope-altering" one [1].
- **Pitching Moment Penalty:** The $C_{m,c/4}$ vs. α plot shows a family of horizontal lines. With each increase in δ, the line shifts to a significantly more negative $C_{m,c/4}$ value. This large nose-down pitching moment is the principal trade-off of high-lift flaps, as it must be balanced by a larger download on the horizontal tail, which in turn creates trim drag [5].

This analysis confirms the fundamental utility and trade-offs of flaps, all within the analytical framework of TAT. However, TAT cannot predict the stall, drag, or flow separation that are the real-world limits of flap effectiveness [1], which will be addressed in Section III.

3 Shortcomings of TAT

While Thin Airfoil Theory (TAT) provides an indispensable, elegant, and computationally free baseline for understanding lift and moment, its foundational assumptions render it grossly inadequate for the design and analysis of a high-lift STOL wing. Its failures stem directly from the simplifying assumptions of inviscid, incompressible, 2D potential flow, which ignore the very physical phenomena that govern high-lift performance.

3.1 Fails to Predict Drag (D'Alembert's Paradox)

TAT is an inviscid theory, meaning it assumes the fluid (air) has zero viscosity ($\mu = 0$) [13]. This mathematical simplification leads directly to D'Alembert's Paradox: an object moving through an ideal fluid experiences zero drag. This is because, in the absence of viscosity, the pressure distribution on the front and rear of the airfoil integrates to a perfect zero, and there is no mechanism for skin friction [39].

In reality, drag is dominated by two viscous components:

- **Skin Friction Drag:** Caused by shear stress within the boundary layer (the "no-slip" condition at the surface), a viscous phenomenon TAT cannot model.
- **Pressure (Form) Drag:** Caused by flow separation, where the boundary layer detaches, creating a low-pressure wake. This separation is itself a viscous effect (see point 2).

For a STOL aircraft, which must operate efficiently at low speeds (where parasitic drag is dominant) and high lift (where induced drag is high), a theory that predicts zero drag is fundamentally unusable for any performance calculation, such as determining the L/D ratio or required thrust.

3.2 Cannot Predict Stall ($C_{L,max}$)

This is the most critical failure for a STOL application. TAT predicts a linear lift curve ($C_l = 2\pi\alpha$) that increases to infinity with the angle of attack. This is physically absurd.

Stall is a viscous boundary layer phenomenon [5]. As the angle of attack (α) increases, the flow must accelerate rapidly around the leading edge and then slow down over the top surface to meet the Kutta condition at the trailing edge. This slowing-down region is one of adverse pressure gradient (pressure increases downstream) [13]. The low-energy fluid within the boundary layer must fight against this pressure gradient. At a critical α, the boundary layer's momentum is insufficient, and it separates from the surface, causing a massive turbulent wake, a sudden loss of lift, and a dramatic increase in drag [1].

Since TAT is inviscid, it has no boundary layer. Without a boundary layer, it cannot model separation. Without separation, it cannot predict stall. Therefore, the primary design metric for a STOL wing—the maximum lift coefficient, $C_{L,max}$—is a value that TAT is, by its very definition, incapable of determining.

3.3 Ignores Airfoil Thickness

TAT's core simplification involves linearizing the boundary condition and applying it to the airfoil's mean camber line ($z(x)$) rather than its actual surface [37]. This effectively reduces the airfoil to an infinitely thin, curved line.

This "thin" approximation fails to account for:

- **The "Thickness Effect":** The thickness of an airfoil displaces the flow, accelerating it over the "shoulders" (point of maximum thickness). This modifies the surface velocity and pressure distribution, which in turn alters the boundary layer development and stall characteristics [5].
- **Leading-Edge Stall:** It cannot distinguish between the gentle "trailing-edge stall" of a thin airfoil (like the NACA 4412) and the abrupt "leading-edge stall" common to thicker airfoils, where separation bubbles form and burst [1].

3.4 Only for Low-Speed (Incompressible) Flight

TAT is built upon the Laplace equation ($\nabla^2\phi = 0$), which is the governing equation for an incompressible flow (ρ = constant) [13]. This assumption is only valid for low Mach numbers. As a rule of thumb, compressibility

effects become significant (errors ¿ 5%) when the flight speed exceeds Mach 0.3 [5]. While STOL aircraft are low-speed, this assumption breaks down if a high-speed cruise segment is also part of the mission. For compressible subsonic flow, the Prandtl-Glauert or Karman-Tsien corrections are required, which are extensions to TAT, not part of its basic formulation [13].

3.5 It is Strictly 2D (Infinite Wing)

The theory is derived in a 2D plane and assumes the wing extends infinitely in the spanwise direction. This assumption omits the most important aerodynamic feature of a real (finite) wing: wingtip vortices.

On a finite wing, the high-pressure air on the lower surface "leaks" around the wingtip to the low-pressure upper surface, creating a trailing vortex system. This system induces a "downwash," ϵ, over the entire wing, which:

- Reduces the effective angle of attack seen by the airfoil sections.
- Tilts the entire 2D lift vector backward, creating a 3D drag component known as induced drag (D_i) [57].

TAT cannot predict this 3D downwash or its associated induced drag. To analyze 3D effects, one must extend the 2D theory to a lifting-line or panel method, which is the subject of the following sections.

4 Analysis using Circulation Theory (Vortex Panel Method)

To overcome the fundamental limitations of Thin Airfoil Theory (TAT), a higher-fidelity numerical model was required. The Vortex Panel Method (VPM) was selected. VPM is a computational technique that is also based on inviscid, incompressible potential flow, but it critically overcomes TAT's "thin" approximation by modeling the exact surface geometry of the airfoil, including its thickness and complex camber.

4.1 Circulation Theory (Kutta–Joukowski Theorem)

The theoretical foundation of VPM is the Kutta–Joukowski Theorem, which provides the direct relationship between circulation and lift. For a two-dimensional body, the lift per unit span is

$$L' = \rho_\infty V_\infty \Gamma$$

where ρ_∞ is the freestream density, V_∞ the freestream velocity, and Γ the total circulation around the airfoil. All inviscid lift-prediction methods ultimately aim to determine Γ accurately at a given angle of attack.

4.2 The Vortex Panel Method (VPM)

Developed by Hess and Smith (1967) [11], the Vortex Panel Method numerically solves the potential flow around any arbitrary two-dimensional geometry by enforcing the no-penetration condition on the airfoil surface.

1. **Discretization:** The airfoil surface is divided into N straight-line panels and each straight line section is given a central control point.

2. **Singularity Distribution:** Each panel j carries a constant-strength vortex γ_j. The continuous vortex sheet $\gamma(s)$ is thus represented discretely.

3. **Boundary Condition:** At the control point of each panel, the normal component of the velocity must vanish:

$$\left(\vec{V}_\infty + \sum_{j=1}^{N} \vec{V}_{ij}\right) \cdot \vec{n}_i = 0$$

   This gives N linear equations for the N unknown vortex strengths.

4. **Influence Matrix:** This system can be expressed as:

$$[A_{ij}][\gamma_j] = [RHS_i]$$

   where A_{ij} is the aerodynamic influence coefficient (normal velocity at i due to a unit-strength vortex at j), and $RHS_i = -\vec{V}_\infty \cdot \vec{n}_i$.

5. **Kutta Condition:** To ensure smooth flow at the trailing edge, the vortex strengths at the upper and lower trailing-edge panels must cancel:

$$\gamma_1 + \gamma_N = 0$$

   This additional equation closes the system and yields a unique set of vortex strengths γ_j.

4.3 Advantages of VPM over TAT

- **Exact Geometry Representation:** Unlike TAT, which considers only the mean camber line, VPM models the actual surface geometry including thickness.

- **Pressure Distribution:** Solving for γ_j yields the surface tangential velocity, from which C_p can be obtained via Bernoulli's equation.

- **Broad Applicability:** VPM handles any arbitrary airfoil shape, unlike TAT which assumes a thin, smooth profile.

- **Higher-Order Foundation:** It forms the computational base for methods like the Vortex Lattice Method (VLM) for finite wings and multi-element panel methods for slats and flaps.

4.4 Aerodynamic Coefficients

1. Total Circulation:

$$\Gamma = \sum_{j=1}^{N} \gamma_j \Delta s_j$$

2. Lift Coefficient:

$$C_l = \frac{L'}{\frac{1}{2}\rho_\infty V_\infty^2 c} = \frac{2\Gamma}{V_\infty c}$$

3. Pressure Coefficient:

$$C_{p,i} = 1 - \left(\frac{V_{t,i}}{V_\infty}\right)^2$$

4. Moment Coefficient:

$$C_m = \frac{1}{c^2}\int_0^c (C_{p,l} - C_{p,u})(x - x_{ref})dx$$

5. Aerodynamic Center (X_{ac}): The aerodynamic center is the point on the airfoil chord where the pitching moment coefficient is constant with respect to the angle of attack (or lift coefficient), meaning $\frac{dC_{m,ac}}{dC_l} = 0$. Panel methods are used to find this point numerically. By calculating the lift coefficient (C_l) and moment coefficient (C_m) about a reference point (x_{ref}, typically the quarter-chord $c/4$) at two slightly different angles of attack (α_1 and α_2), the aerodynamic center location x_{ac} can be determined:

$$\frac{x_{ac}}{c} = \frac{x_{ref}}{c} + \frac{dC_m}{dC_l} \approx \frac{x_{ref}}{c} + \frac{C_m(\alpha_2) - C_m(\alpha_1)}{C_l(\alpha_2) - C_l(\alpha_1)}$$

Once x_{ac} is found, the constant moment coefficient about this point, $C_{m,ac}$, can be calculated. For inviscid potential flow, this value is constant for all angles of attack.

4.5 Code Implementation and Validation via XFLR5

A Python implementation was developed using NumPy.

- Read airfoil coordinate data.
- Generate panels and calculate geometric properties.
- Construct the $N \times N$ influence matrix and enforce the Kutta condition.
- Solve $A\gamma = b$.
- Integrate results to obtain C_l, C_p, C_m and X_{ac}.

Validation was performed using XFLR5, which extends this inviscid model by coupling it with a viscous boundary layer solver (based on Mark Drela's XFOIL [8]).

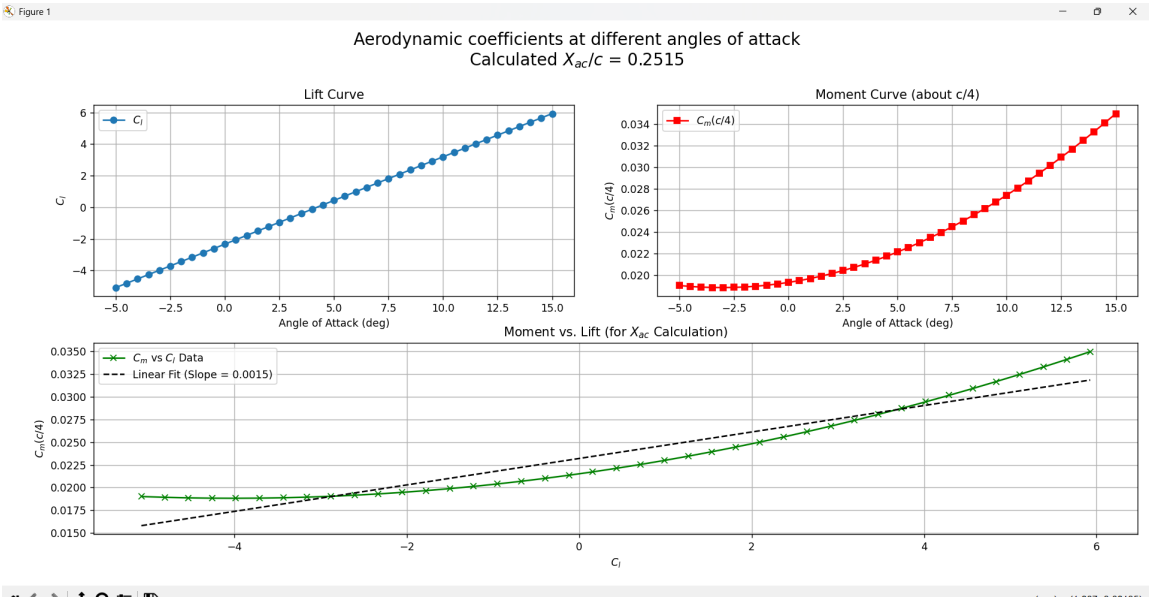

Figure 2: VPM for the NACCA 4412 airfoil

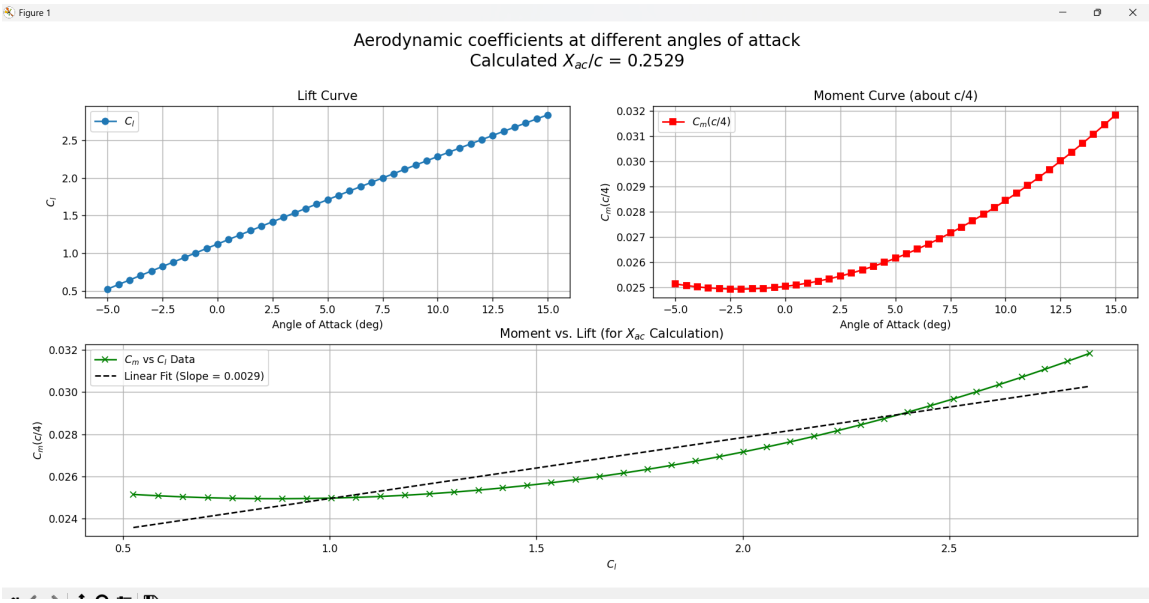

Figure 3: VPM for the S 1223 airfoil

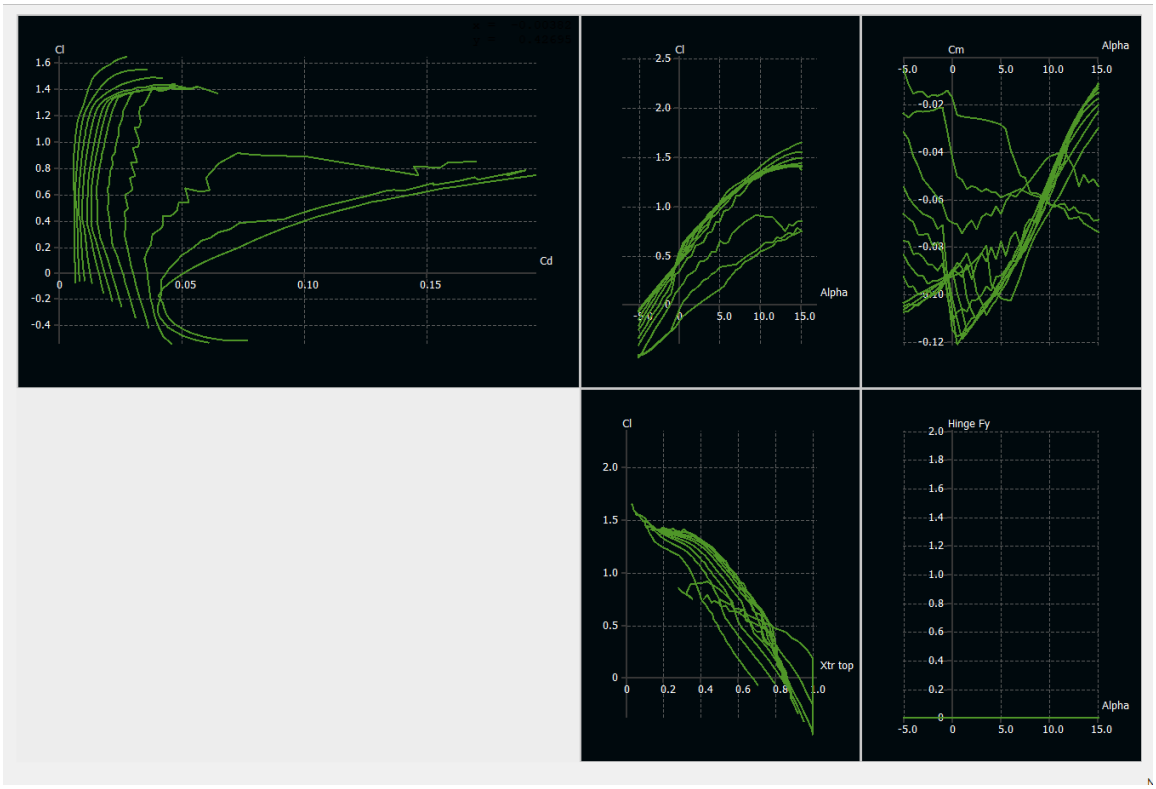

Figure 4: XFLR for the NACCA 4412 airfoil

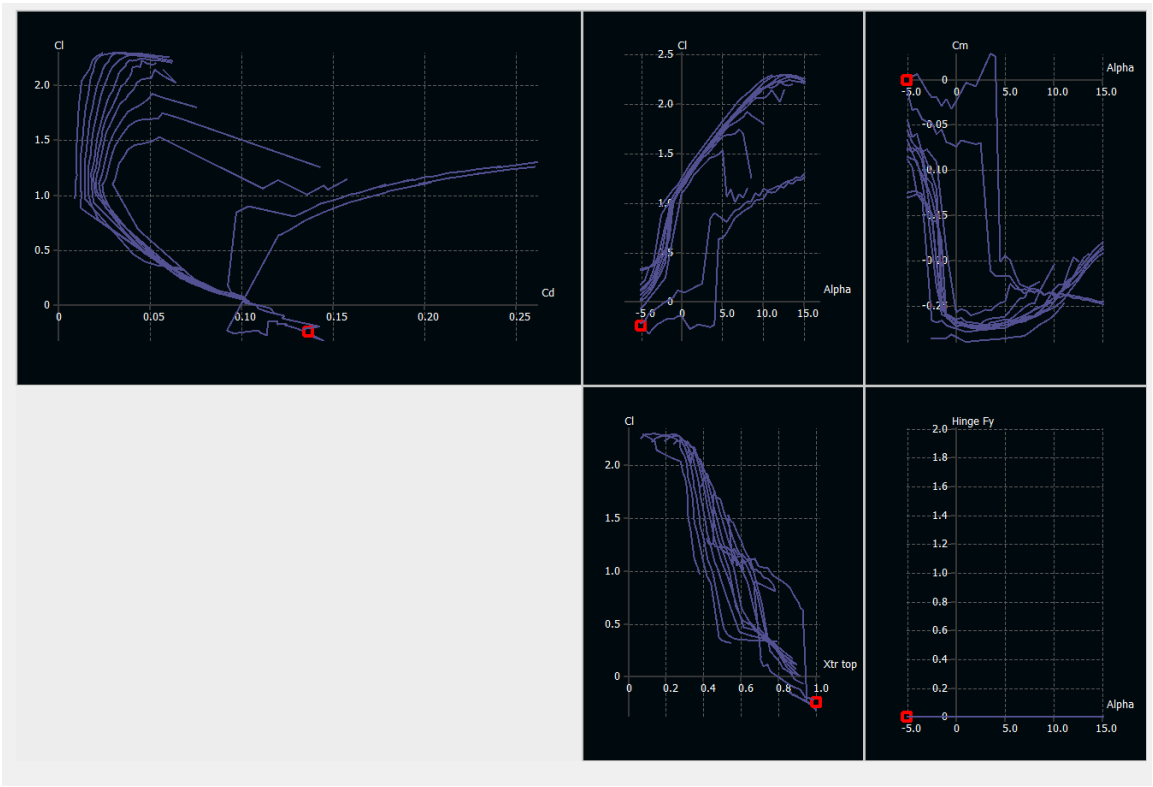

Figure 5: XFLR for the S 1223 airfoil

- **Linear Region:** At low angles of attack, the C_l vs. α curve from the Python VPM matched XFLR5 perfectly, validating the inviscid solver.
- **Stall Region:** Beyond the linear range, the inviscid VPM continued to predict linear lift, while XFLR5 correctly modeled stall and predicted a finite $C_{L,max}$, due to viscous separation captured by its boundary layer coupling.

5 Incorporation of High-Lift Devices

The analysis in Section IV confirmed that even a highly optimized single-element airfoil (like the S1223) has a finite $C_{L,max}$ governed by viscous boundary layer separation. To achieve the exceptionally high lift coefficients required for true STOL performance, a multi-element high-lift system is mandatory. This system typically consists of leading-edge slats and trailing-edge flaps, which work synergistically to fundamentally alter the wing's aerodynamics.

5.1 Leading Edge Slats

A slat is a small, auxiliary airfoil segment that, when deployed, moves forward and often downward from the main wing's leading edge, opening a small, carefully-shaped slot [13].

- **Aerodynamic Function:** The primary function of the slat is boundary layer control. The high-pressure air from the wing's lower surface (stagnation region) is ducted through this convergent-divergent slot and is accelerated to a high velocity. This "jet" of high-energy air is then injected tangentially into the upper-surface boundary layer of the main element [51].
- **Effect:** This injected air re-energizes the boundary layer, which is struggling against the severe adverse pressure gradient near the leading edge at high angles of attack. By replenishing the boundary layer's momentum, the slat makes it more resistant to separation.
- **Key Result:** The slat does not significantly increase lift at low angles of attack. Its critical contribution is that it dramatically increases the stall angle (α_{stall}) of the entire wing system [5]. This allows the wing to continue generating lift to a much higher angle of attack, which in turn leads to a much higher final $C_{L,max}$.

5.2 Trailing Edge Flaps

Flaps are deployable surfaces at the trailing edge that serve to increase the wing's effective camber and, in some cases, its area.

5.2.1 Types and Mechanisms

- **Plain and Slotted Flaps:** As analyzed in Section II.b, a plain flap simply increases effective camber. A slotted flap improves upon this by opening a slot between the main wing and the flap. This slot functions identically to a slat's, re-energizing the boundary layer over the flap element itself. This prevents the flap from stalling, allowing it to be deflected to much higher angles (e.g., 40°–50°) before it becomes ineffective [54].
- **Multi-Element (Fowler) Flaps:** These are the most effective high-lift devices. When deployed, Fowler flaps extend rearward (increasing the chord, c) while also deflecting downward. This is a powerful dual-effect:
  - **Camber Increase:** The downward deflection dramatically increases the wing's effective camber, shifting the entire C_l curve upwards.
  - **Area Increase:** The rearward extension increases the total wing area (S). From the lift equation ($L = C_L \cdot \frac{1}{2}\rho V^2 \cdot S$), Fowler flaps provide a "two-for-one" benefit by increasing both C_L and S simultaneously [1]. Most modern Fowler flaps are also multi-slotted, with two or three elements (e.g., vane, main flap, aft-flap) to manage the boundary layer over the highly deflected system.

5.3 Synergistic Effects on C_l vs. α Graph

The true power of a high-lift system is how the slats and flaps work together. Their individual effects are not simply additive; they are synergistic [53].

- **Baseline Airfoil:** Has a standard C_l vs. α curve, stalling at $\alpha_{stall,\text{clean}}$ and reaching $C_{L,max,\text{clean}}$.

- **Flaps Only (Deployed):** The flaps increase effective camber, which shifts the entire lift curve up and to the left. This provides a much higher C_l for a given α (the "upward shift"). However, this also creates a more severe leading-edge pressure peak, causing the wing to stall earlier at a lower angle of attack ($\alpha_{stall,\text{flap}}$) [5].

- **Slats Only (Deployed):** The slats re-energize the leading-edge flow, delaying stall significantly. The C_l vs. α curve is extended to the right, reaching a new, much higher $\alpha_{stall,\text{slat}}$.

- **Combined (Slats + Flaps):** This is the optimal configuration. The flaps provide the upward shift (high C_l), and the slats provide the rightward shift (high α_{stall}). The slat prevents the premature leading-edge stall that the flaps would have caused, allowing the entire system to reach a very high angle of attack. The result is a dramatic increase in the overall $C_{L,max}$ of the system, often 2–3 times that of the clean airfoil [13].

5.4 Methods for Multi-Element Systems

Analyzing these systems is exceptionally complex due to the strong viscous and inviscid interactions between the elements.

- **Multi-Element Panel Method (Inviscid):** This is an extension of the VPM (Section IV), where each element (slat, main wing, flap) is paneled separately. A Kutta condition must be applied to the trailing edge of every element. This method can solve for the potential flow interactions (e.g., how the slat's circulation modifies the pressure distribution on the main wing), which is a dominant effect [36]. However, as an inviscid method, it cannot predict stall or $C_{L,max}$.

- **Viscous-Coupled Panel Methods:** Codes like MSES (developed by Mark Drela) can analyze multi-element airfoils by coupling the panel method with an integral boundary layer solver [9]. This is extremely challenging due to the need to model the confluent boundary layer (the wake of the slat merging with the boundary layer of the main element).

- **Computational Fluid Dynamics (CFD):** For high-fidelity analysis, modern design relies on solving the Reynolds-Averaged Navier-Stokes (RANS) equations. RANS-based CFD can capture the complex, turbulent, and separated flow in the gaps and wakes of the high-lift system, providing the most accurate predictions of $C_{L,max}$ and stall behavior [47]. This is the industry-standard tool for optimizing the precise placement (gap, overhang) of slat and flap elements.

6 CFD Analysis of a single airfoil, and multi element airfoil

6.1 Rationale for CFD

While the panel methods (Section IV) and viscous-coupled tools like XFLR5 provide excellent preliminary predictions, they are limited in their ability to model the strong, non-linear, viscous interactions inherent in multi-element high-lift systems. The complex flow phenomena—such as confluent boundary layers (the merging of a slat's wake with the main wing's boundary layer) and massively separated flow at high angles of attack—are beyond the predictive capabilities of these lower-fidelity methods [53].

Therefore, to accurately predict $C_{L,max}$, stall characteristics, and the detailed flow physics, a high-fidelity analysis using Computational Fluid Dynamics (CFD) is required. This analysis involves solving the Reynolds-Averaged Navier-Stokes (RANS) equations.

A progressive, step-by-step methodology was adopted. This systematic approach, often termed "validation and verification" (V&V), is critical. It establishes confidence in the numerical model (mesh, solver, turbulence model) at each stage of geometric complexity before proceeding to the final, computationally expensive simulation of the full high-lift configuration [2].

6.2 Stage 1: Single Airfoil Validation (Baseline Case)

The foundational step was the validation of the computational model against a single, clean airfoil (e.g., the S1223).

- **Objective:** To establish a verified baseline for the numerical setup.
- **Method:** A well-documented experimental study of the S1223 airfoil was selected from the literature [49]. A 2D simulation was configured to precisely replicate the paper's experimental conditions, specifically the Reynolds number (Re) and Mach number (M).
- **Validation:** The primary objective was to match the C_l vs. α, C_d vs. α, and surface pressure coefficient (C_p) distributions from the experimental data. Discrepancies were minimized by refining the mesh (especially at the leading edge and boundary layer) and evaluating different turbulence models.

6.3 Stage 2: Incremental Multi-Element Analysis

With a validated baseline, geometric complexity was added incrementally.

6.3.1 Single Slotted Flap

The first step was modeling the S1223 with a single slotted flap. The geometry and deployment settings (hinge point, gap, overhang) were based on a known STOL configuration. The simulation validated the model's ability to handle the flow through the flap slot and the interaction of the main wing's wake with the flap.

6.3.2 Double Slotted Flap

This was extended to a more complex, high-performance double-slotted flap system. This configuration is critical for STOL and introduces significant geometric complexity and flow interaction, particularly the merging of two distinct wakes with the boundary layer of the aft-flap. At each sub-stage, simulation results were compared against published experimental data to validate the model's predictive accuracy for multi-element wake interactions and flow separation.

6.4 Stage 3: Full High-Lift System (Slat + Flaps)

The final simulation stage will integrate all components: the leading-edge slat with the double-slotted flap system. This model represents the complete STOL configuration.

- **Objective:** To generate the final, high-fidelity performance polars (C_l, C_d, C_m) for the complete system and to definitively identify the maximum lift coefficient ($C_{L,max}$) and stall angle (α_{stall}).

- **Analysis:** This simulation done in Ansys 2021 will allow for detailed analysis of the synergistic flow interactions, specifically:
  - The acceleration of flow through the slat slot and its effect on re-energizing the main element's boundary layer.
  - The management of the severe, flap-induced suction peak by the slat's circulation.
  - The complex, confluent boundary layer development over the multi-element flap system.

6.5 Simulation Parameters and Setup

- **Software Used:** ANSYS Fluent 2023 R2, using the ANSYS Meshing platform for grid generation.
- **Governing Equations:** The two-dimensional, steady-state Reynolds-Averaged Navier-Stokes (RANS) equations were solved. Flow was treated as incompressible, which is a valid assumption for the low-Mach-number STOL operational envelope.
- **Models:** The $k-\omega$ **SST (Shear Stress Transport)** turbulence model was selected. This model is the industry standard for aerodynamic applications, as it accurately blends the robust $k-\omega$ model in the near-wall region (resolving the boundary layer) with the $k-\epsilon$ model in the freestream, providing high fidelity for flows with separation.
- **Meshing & BCs:** A hybrid, unstructured C-grid topology was used.
  - **Meshing:** Fine inflation layers were grown from all airfoil surfaces to ensure the non-dimensional wall distance y^+ was approximately 1, which is required for the SST model. The mesh was significantly refined around the leading edges, trailing edges, and in the slat/flap gap regions to capture high-velocity gradients and wake interactions.
  - **Boundary Conditions (BCs):** A "Farfield" condition was applied to the C-grid boundary, with the freestream velocity and angle of attack specified. All airfoil surfaces (slat, main element, flap) were set as "No-Slip Walls."

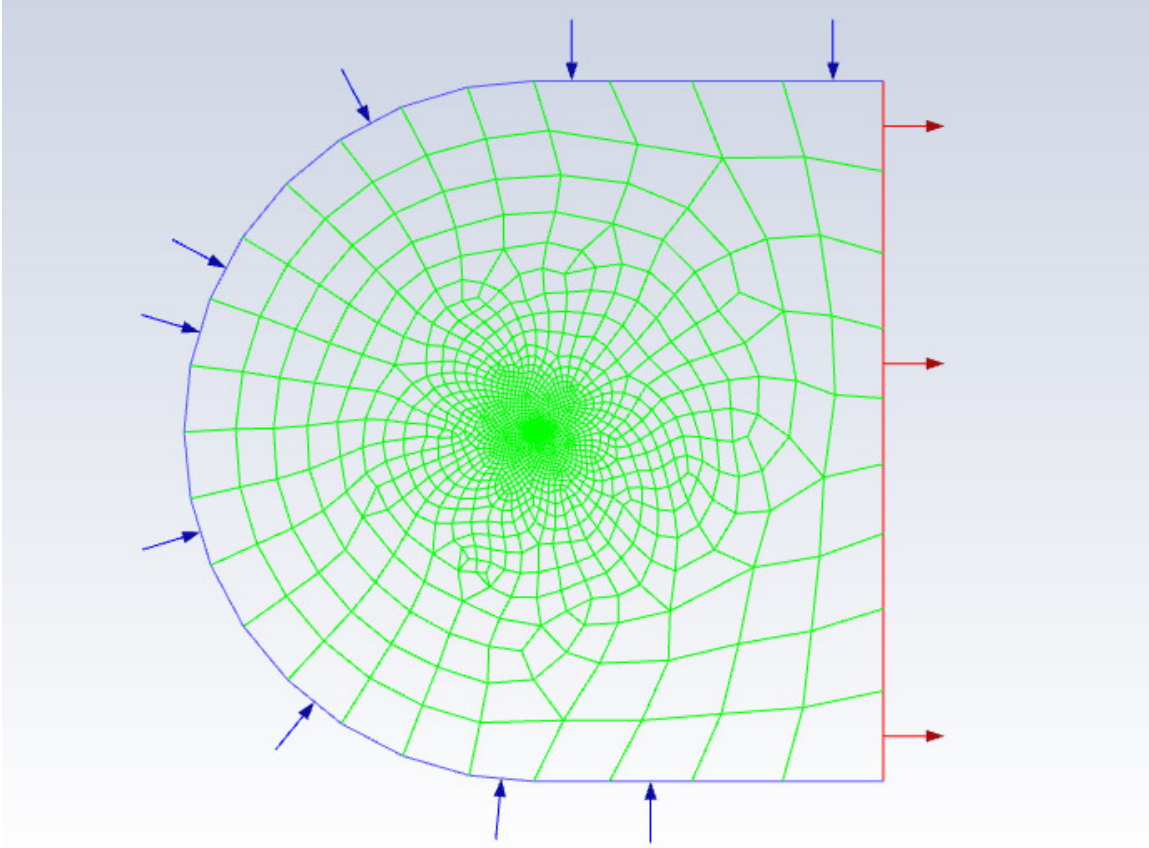

Figure 6: Boundary Conditions for the S1223 airfoil

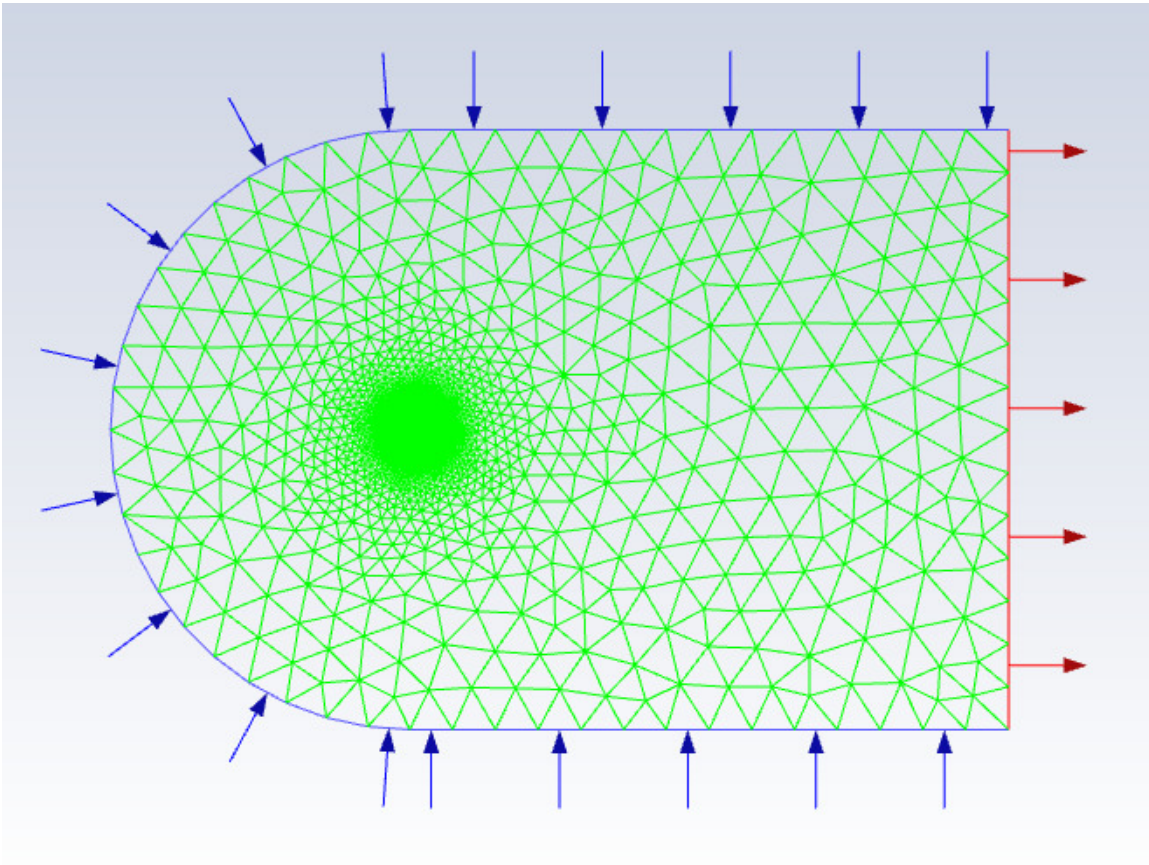

Figure 7: Boundary Conditions for the combined airfoils

6.6 Challenges, Setbacks, and Future Work

- **Methodology Status:** The progressive validation methodology outlined is currently in progress. To date, the analysis has successfully validated the baseline airfoil (Stage 1) and the single-slotted flap configuration (Stage 2a). The subsequent stages, particularly the computationally intensive simulation of the full slat-and-flap system (Stage 3), represent the immediate next steps for this research.

- **Validation Data Access:** A significant challenge was the difficulty in obtaining high-fidelity, open-access experimental data for complete multi-element airfoil systems. Such data is critical for the rigorous validation of the final high-lift configuration. Future work would be greatly enhanced by access to institutional repositories or partnership data.

- **Computational Resources:** The high computational cost of RANS, especially for the fine meshes required to resolve the confluent boundary layers in the multi-element system, proved to be a notable limitation. Analyses were constrained by available workstation-level hardware, limiting mesh density and the number of angles of attack that could be simulated. Access to high-performance computing (HPC) clusters is identified as a critical need for completing the full, high-fidelity analysis.

7 Propulsion system

7.1 Introduction

The propulsion system integrated with the fixed wing is need to be designed to meet the required design constraint i.e. It should give required thrust as well as the required lift.

This section of the report presents the idea how we are going to approach the problem.

7.2 Thrust Device

1. Propeller
2. Electric Ducted Fans
3. Hybrid Electric Devices

Preliminary theories

Momentum theory: The propeller is idealized as an actuator disc that accelerates the airflow through it, producing thrust by imparting momentum to the air stream. The flow is assumed steady, incompressible, and axisymmetric, with a uniform pressure jump across the disc.

From control volume analysis and Bernoulli's principle:

$$T = \dot{m}(V_j - V_\infty)$$

$$\dot{m} = \rho A V_i$$

where:

- T = thrust,
- ρ = air density,
- A = propeller disc area,
- V_∞ = freestream velocity,
- V_j = jet (downstream) velocity,
- V_i = induced velocity at the disc.

Using Bernoulli's equation across the disc, the relationship between velocities is:

$$V_j = V_\infty + 2V_i$$

Hence, substituting gives the classical thrust expression:

$$T = 2\rho A V_i (V_\infty + V_i)$$

Blade Element Theory (BET) Blade Element Theory provides a more detailed view of propeller performance by dividing each blade into small radial elements and calculating the aerodynamic forces on each segment.

Each element experiences lift and drag given by:

$$dL = \frac{1}{2}\rho V_{rel}^2 c C_L dr, \quad dD = \frac{1}{2}\rho V_{rel}^2 c C_D dr$$

The corresponding thrust and torque contributions are:

$$dT = (dL\cos\phi - dD\sin\phi)B, \quad dQ = (dL\sin\phi + dD\cos\phi)rB$$

where V_{rel} is the local relative velocity, c the chord length, ϕ the inflow angle, and B the number of blades. Total thrust and torque are found by integrating along the blade radius:

$$T = \int_0^R dT, \quad Q = \int_0^R dQ,$$

$$P = 2\pi n Q$$

This method allows accurate estimation of thrust and power distribution along the blade, making it essential for propeller optimization and CFD validation.

7.3 Blown Effect

The blown effect refers to the enhancement of lift achieved by directing a high- momentum airflow, such as a propeller slipstream or jet exhaust, over the wing or flap surface. In this configuration, the accelerated airflow energizes the boundary layer, delays separation, and allows the wing to sustain higher lift coefficients at lower speeds.

7.3.1 Distributed Electric Propulsion

In a DEP configuration, multiple small propellers are distributed along the wing's leading edge. The slipstream from each propeller increases the local dynamic pressure over the wing, energizing the boundary layer and delaying flow separation. This results in higher lift coefficients and allows the aircraft to take off at much lower speeds. The distributed arrangement also ensures near-uniform flow acceleration along the span, improving control and reducing induced drag.

7.3.2 Electric ducted fans

EDF-based blown lift relies on high-velocity jets directed over the wing or flap surface. The confined duct increases jet momentum and enables precise control of flow direction, producing a strong downward deflection of the jet at the trailing edge. This turning of the high-momentum stream creates a pressure differential that augments lift, similar to a jet flap. While EDFs generally produce higher jet velocities and more compact integration, DEP systems offer superior propulsive efficiency and redundancy.

7.4 Ways for blown effects:

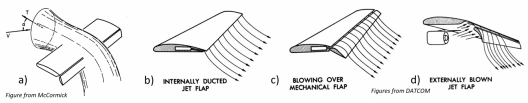

Figure 8: Methods of lift augmentation based on both propeller-wing interactions (a) and jet-wing interactions (b-d)

7.5 Increase in Lift due to Blown jet configuration

The key similarity between all jet flap and blown wing configurations is the deflection of a high-momentum stream of air - the jet or propeller slipstream - downward from the trailing edge of the airfoil and further turns by some deflection angle back towards the freestream. This deflection coincides with a pressure difference between the upper and lower surfaces of the jet, which in turn further deflects the freestream flow. This pressure difference between surface doesn't have to vanish at the trailing edge. Hence, lift of airfoil increases substantially.

Another significant mechanism which contributes to increased lift of blown wings or externally blown flaps is the delayed bursting of the main-element wake and the delayed separation of the flap boundary layer mainly achieved through injection of blowing jet's flow through the flap gap.

7.6 Theoratical and analytical simulations

7.7 The lift on a Thin Aero Foil with Jet-Augmented Flap

The method is applied in scenario wherein the jet enters the main stream tangentially from a deflected flap. The lift derivative with respect to the (small) angle of deflection β is of the form. To measure the performance the flap are modelled by thin aerofoil theory.

$$\partial C_L/\partial\beta = 2(\chi + \sin\chi + 2\pi D_0)$$

Where $\chi = 2\sin^{-1}\sqrt{E}$

E = Flap Length/Airfoil Chord. $D_0 = F(E, C_J)$.

For the following solution in case of flap blowing the slope geometry is taken to be

$$\frac{dy}{dx} = \epsilon(x), \quad 0 < x < 1.$$

The chord length is taken as unity throughout. We also take the following**important considerations:**

- x, y co-ordinates of the airfoil and jet sheet in directions parallel and perpendicular to the undisturbed stream
- ξ, η dummy variables over the same range as x
- ρ_0, U_0 density and velocity of undisturbed stream
- $w(x)$ downwash velocity on $y = 0$
- $f(x)$ non-dimensional vorticity distribution on $0 \leq x \leq 1$ representing wing (i.e. velocities are $U_0\{1 \pm \frac{1}{2}f(x)\}$ on upper and lower surfaces)
- C_J jet momentum coefficient, $= J/(\frac{1}{2}\rho_0 {U_0}^2)$ where $J = flux$ of momentum
- $\lambda = 4/C_J$
- $\epsilon(x)$ slope of aerofoil surface
- α incidence of forward part of surface
- β angular deflection of flap from forward part of surface
- E ratio of lengths of flap and whole aerofoil
- $\theta = \cos^{-1}(2x - 1)$ for $0 \leq x \leq 1$
- χ value of θ at hinge point, i.e. $cos^{-1}(1 - 2E)$
- $X = \{1 - (1 - x)^\dagger\}/\{1 + (1 - x)^\dagger\}$
- $\phi = 2\cos^{-1}(x^{-t})$ for $x > 1$
- $k(x)$ defined by equation (20)
- $K(\phi) = [1/(2\beta)]g[1/\cos^2(\phi/2)]$
- N number of pivotal points
- $\phi_m = m\pi/N \quad m = 0, 1, ...(N - 1)$
- $D_u, ...D_{N-1}$ coefficients in Fourier series for $K'(\phi)/\sin(\phi/2)$
- a_{mn}, b_{mn}, f_m coefficients in equation (26)
- C_L lift coefficient

Case 1: Attached Flow on a Thin Aerofoil with hinged flap (No Jet $Cj = 0$) We observe that

$$C_L = 2\beta(\chi + \sin\chi).$$

And the lift coefficient on the flap becomes

$$C_{L\ \text{flap}} = 2\beta\chi^2/\pi.$$

Assuming linear theory the effect of incidence is directly additive; thus with an incidence (α) the lift coefficient becomes

$$C_L = 2\pi\alpha + 2(\chi + \sin\chi)\beta.$$

CASE 2: Flap with Tangential Jet

$$C_J = J/(\frac{1}{2}\rho_0 {U_0}^2).$$

With presence of jet tangential blowing the CL effectively becomes

$$C_L = 2(\chi + \sin\chi + 2\pi D_a)\beta$$

Where in D_0 is the first fourier term constant obtained

$$\sum_{n=0}^{N-1}(a_{mn} + \lambda b_{mn})D_n = f_m, \quad m = 0, 1, ...(N-1),$$

where $a_{mo} = \sin\phi_m \quad a_{mn} = (1 + \cos\phi_m)\sin n\phi_m$ for n¿0

$$b_{mn} = \frac{4}{4n^2 - 1}(\cos n\phi_m + 2n\tan\frac{\phi_m}{2}\sin n\phi_m)$$

$$f_m = -2\sec\frac{\phi_m}{2}k[1/\cos^2(\phi_m/2)]$$

$$= \frac{2\chi}{\pi}\tan\frac{\phi_m}{2} - \frac{4}{\pi}\sec\frac{\phi_m}{2}\tan^{-1}(\tan\frac{\chi}{2}/\sin\frac{\phi_m}{2}).$$

While solvable through numerical solver, we can directly utilise:

Table 1: TABLE I: COMPUTED VALUES OF $\partial C_L/\partial\beta$ [**?**, **?**]

	E							
(l)2-9 C_J	0	0.05	0.02	0.1	0.2	0.3	0.5	1.0
0	0	1.123	1.774	2.487	3.455	4.151	5.141	6.283
0.01	0.357	1.210	1.845	2.547	3.505	4.198		6.392
0.05	0.803	1.490	2.081	2.751	3.681	4.360		6.460
0.1	1.137	1.763	2.318	2.962	3.868	4.535		6.614
0.2	1.641	2.708	2.194	3.316	4.190	4.839		6.885
0.4	2.391	2.873	3.340	3.908	4.740	5.365		7.365
0.5	2.707	3.165	3.618	4.173	4.989	5.607		7.588
1	4.026	4.421	4.827	5.337	6.102	6.690	7.561	8.605
2	6.135	6.836	6.474	7.301	8.012	8.566		10.405
5	11.231	11.513	11.825	12.236	12.878	13.385	14.227	15.109

Thus, taking advantage of linearised theory, the overall incidence alpha is directly additive and hence

$$C_L = 2\pi(1 + 2B_o)\alpha + 2(\chi + \sin\chi + 2\pi D_o)\beta,$$

Where B_0 is the coefficient evaluated as function of C_J and can be found through table.

dCL/d(beta) for thin wings with blown flaps.

Table 2: C_j v/s B_0, D.A. Spence [?]

C_J	A_0	A_1	B_0	B_1	A_0	B_0
0.01	0.0348	1.2038	0.0031	0.0046	0.090	0.002
0.05	0.0639	1.1484	0.0141	0.0200	0.103	0.011
0.10	0.0905	1.0999	0.0263	0.0356	0.119	0.022
0.20	0.1306	-1.0317	0.0479	0.0609	0.148	0.043
0.40	0.1903	-0.9409	0.0861	0.0993	0.199	0.082
0.50	0.2154	-0.9066	0.1038	0.1150	0.223	0.100
1.00	0.3204	-0.7854	0.1848	0.1735	0.326	0.182
1.50	0.4085	-0.7078	0.2585	0.2119	0.413	0.256
2.00	0.4882	-0.6532	0.3280	0.2378	0.493	0.326
3.00	0.6333	-0.5847	0.4589	0.2654	0.637	0.456
4.00	0.7670	0.5498	0.5830	0.2711	0.771	0.580
5.00	0.8937	0.5368	0.7023	0.2617	0.897	0.699
∞	1.4725	0.6491	1.2599	0.0819	1.472	1.251

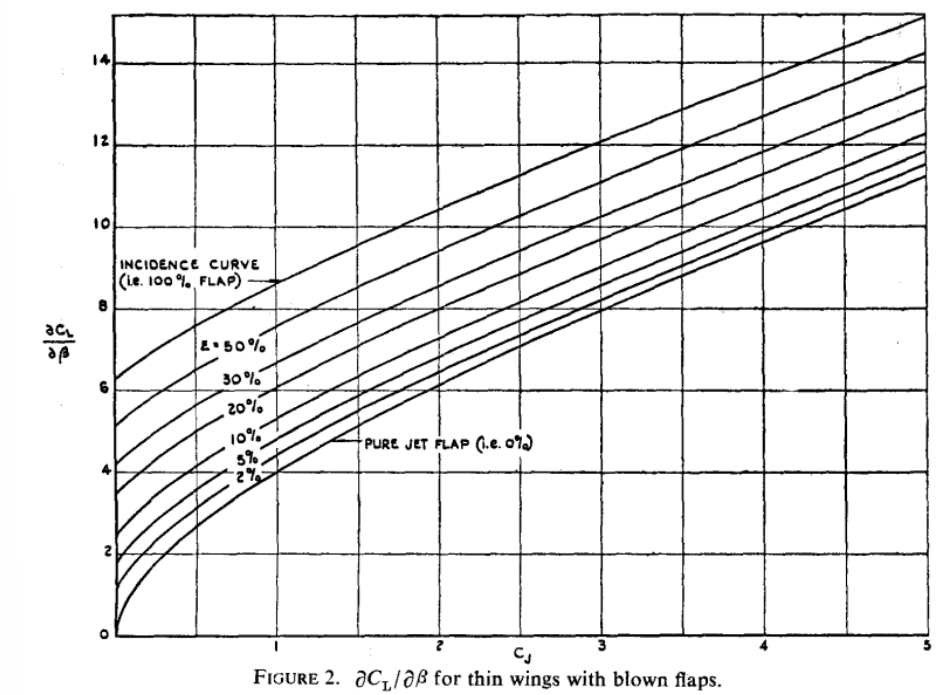

FIGURE 2. $\partial C_L/\partial\beta$ for thin wings with blown flaps.

Figure 9: $\partial C_L/\partial\beta$ for thin wings with blown flaps with variation in E.

The motive behind this theory was to observe the quantitative increase in C_L through tangential velocity, which through take Delta of C_{L1} and C_{L2}, we see that addition $4 \times \pi \times D_0 \times \beta$ increase observed in lift.

This motivated us to utilise this phenomenon and come up with certain geometry to help us achieve higher C_L.

7.8 Our Innovation:

We employ two Electric Ducted Fans (EDFs) per wing to generate the blown-lift effect. Each fan's exhaust flow is directed through a guided duct designed to actively control the exit velocity. By adjusting the throttle of EDFs, the system can modulate the jet velocity $[C_J]$ to achieve the desired lift augmentation during different flight phases. This mechanism enables real-time control of lift distribution and stability, allowing the aircraft to dynamically manage its lift coefficient and maintain precise short take-off and landing performance.

While less efficient at low speeds than open propellers, their higher jet velocity and duct-induced flow control can help to create high lift. CFD simulations are used to compare the momentum addition and pressure recovery characteristics between EDF and propeller setups.

7.9 Area to look into

- frictional losses(Darcy equation factor)
- Colebrook-White equation
- Guide Vane Optimization
- guided duct veins

7.10 The problem has design constrains

- Minimum Lift Target = 15kg @ 20 m/s freestream velocity
- Minimum freestream velocity with flaps deployed [Takeoff mode] = 20 m/s
- Minimum freestream velocity with flaps retracted [Cruise mode] = 80 m/s
- Thrust Envelope: $0.5 < T/W < 0.65$ $\{W = 15\ kg\}$
- Tilt-Wing/Tilt-Rotor Designs are NOT allowed

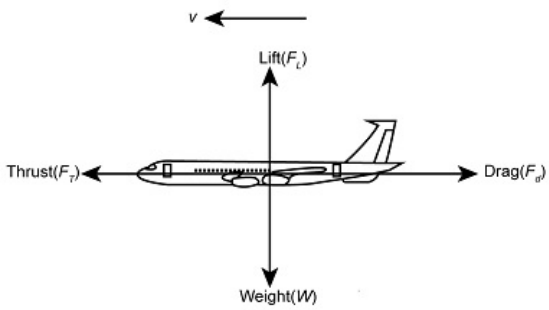

Figure 10: Forces on the airplane

7.11 Thrust distribution

The effective thrust is yet to be quantized due to pending ducted configurtation. Hence, losses yet to be accounted, so full and final thrust devided among the two outer large propellers.

At Cruise due to Steady State($a_{\text{net}} = 0$),

$$T_{\text{total}} - D = 0$$

$$T = D = 0.5 \times \rho \times C_d \times S_{\text{ref}} \times v^2$$

In the process of iterative design of wing, the C_d as an initial input was given to 0.05. Keeping design conservative for factors such as fluctuations in wing C_d, parasitic drag due to Fuselage and drag due to nacelles. The $C_d = 0.1$ was taken as the input to calculate Drag. S for current wing design was $0.15m^2$. The total Drag was calculated by using the simple formula is 43.2 N. Hence, required thrust

$$T = 43.2 \text{ N (Total)}$$

7.11.1 Configuration of thrust and blown devices

This setup marks the starting point for developing our propulsion system. We used a **10x10E APC propeller**, a two-blade design with a 10-inch diameter and 10-inch pitch, commonly used in UAVs and small-scale aircraft for its reliable thrust and aerodynamic efficiency. Choosing this compact and efficient propeller helped us reduce drag and frontal area while maintaining steady thrust during cruise.

This configuration provided a solid baseline to measure thrust, drag, and power requirements. In future stages, we plan to optimize the propellers with additional blades to further improve thrust and aerodynamic performance,

while also refining power optimization. The results and data obtained from our current setup will serve as key benchmarks, guiding the next iteration of our design as we move toward a more optimized and efficient propulsion system.

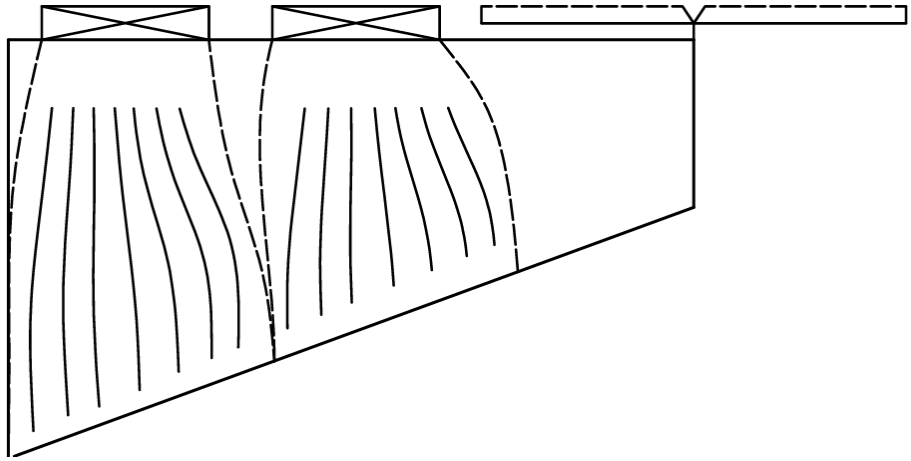

Figure 11: Proposed blown jet layout (as seen from top view)

The picture shows the top-view of the right wing, where two EDF and one propeller are put together to enhance the lift and to provide the required thrust.

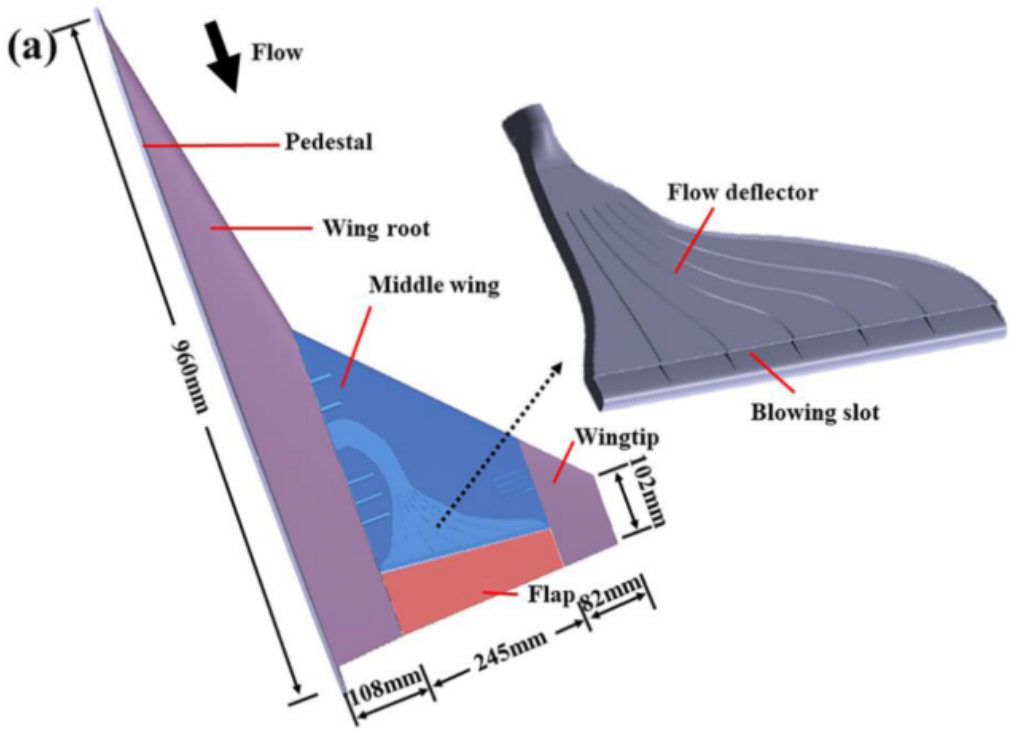

Figure 12: Wing geometry with flow deflector and blowing slot[23]

The closest model - though not identical - to our guided duct concept was found in this study. In their work, the guided ducts were used to direct high-speed airflow over the wing flap, serving as a blowing flow control mechanism to suppress flow separation and enhance lift during takeoff and landing conditions.

7.12 Future Works

- Blade position Effect
- VBM (virtual blade model)
- Performance study of propellers along with number of blades
- position of EDFs and
- Conduct CFD for viscous and turbulent models to characterize the blown-effect.

8 Preliminary 3D geometry of the aircraft

This section establishes the corrections applied to lift and drag coefficients derived from Prandtl's Lifting-Line Theory (LLT) when adapting from the idealized two-dimensional (2D) infinite-span assumptions to realistic finite wings. The analysis presents modified expressions for lift-curve slope and induced drag that account for aspect ratio, compressibility, and Oswald efficiency factor. These corrections are essential for accurate aerodynamic prediction, particularly in low-aspect-ratio configurations such as STOL aircraft, where induced effects dominate. The study also provides typical parameter ranges and discusses their implications on wing design.

8.1 Correction of Lift and Drag Coefficients for Finite Wings

8.1.1 Introduction

Prandtl's Lifting-Line Theory (LLT) forms the foundation of finite-wing aerodynamic analysis [12]. It assumes inviscid, incompressible flow with an ideal elliptical lift distribution, conditions rarely achieved in practice. Finite wings experience tip vortices, which induce downwash and reduce the effective angle of attack across the span [17]. Additionally, viscous and compressibility effects alter the pressure distribution and increase drag, leading to deviations from the idealized infinite-span model [25]. These deviations are significant in practical aircraft design, especially in configurations such as STOL aircraft that rely heavily on high-lift aerodynamic performance. This report provides the mathematical formulations and interpretations of the necessary corrections for lift and drag coefficients in finite wings.

8.1.2 Correction for Lift-Curve Slope

Two-Dimensional Reference: For an ideal two-dimensional airfoil in incompressible flow, the theoretical lift-curve slope is given by:

$$\left(\frac{dC_L}{d\alpha}\right)_{2D} = 2\pi \quad \text{(per radian).[12]} \tag{1}$$

This value arises from thin airfoil theory and holds well for slender, camberless airfoils at low Mach numbers.

sectionFinite-Wing (Three-Dimensional) Correction For a finite wing, the presence of tip vortices and induced downwash reduces the effective lift-curve slope. From lifting-line theory, the corrected (3D) lift-curve slope is expressed as:

$$\left(\frac{dC_L}{d\alpha}\right)_{3D} = \frac{a_0}{1 + \frac{a_0}{\pi e\,\mathrm{AR}}}.[12,\ 17] \tag{2}$$

Here, a_0 is the 2D lift-curve slope (typically 2π per radian [12]), $\mathrm{AR} = \frac{b^2}{S}$ is the aspect ratio, and e is the Oswald efficiency factor representing spanwise efficiency.

Physical Interpretation: The reduction in lift-curve slope for finite wings results from induced downwash generated by trailing vortices, which decreases the effective angle of attack seen by each wing section [25]. Non-elliptical lift distributions caused by taper, twist, or control surfaces introduce efficiency losses represented by the factor e (typically between 0.7 and 0.95). [17, 25]

8.1.3 Correction for Drag Coefficient

The total drag coefficient for a finite wing is given as:

$$C_D = C_{D,0} + C_{D,i}.[12] \tag{3}$$

where $C_{D,0}$ represents the zero-lift (profile) drag and $C_{D,i}$ the induced drag. The induced drag can be expressed as:

$$C_{D,i} = \frac{C_L^2}{\pi e\,\mathrm{AR}}.[17,\ 25,\ 26] \tag{4}$$

Equation (4) shows that induced drag grows with C_L^2 and reduces with increasing aspect ratio and span efficiency.

8.1.4 Typical Parameter Ranges

Representative aerodynamic parameter ranges used in finite-wing analysis are summarized in Table 3. These values are widely used in conceptual aircraft design studies [12, 17, 25].

Table 3: Typical aerodynamic parameter ranges for finite-wing configurations [17, 25].

Parameter	Typical Range	Comments
Aspect Ratio (AR)	5 – 12	Low for STOL; high for gliders.
Oswald Efficiency (e)	0.70 – 0.95	Elliptical $\rightarrow e \approx 1$.
Zero-lift Drag ($C_{D,0}$)	0.01 – 0.03	Depends on Re and configuration.

8.1.5 Typical Lift-Curve Slopes for Finite Wings

Table 4 compares lift-curve slopes derived using Eq. (2) for different aspect ratios and efficiency factors.

Table 4: Representative lift-curve slopes (per radian) [12, 17].

Configuration	Lift-Curve Slope	Remarks
2D Airfoil (Inviscid)	2π (6.283)	Ideal theoretical value.
Finite Wing (AR=10, e=0.9)	$\sim$ 5.5–5.8	General aviation wings.
Finite Wing (AR=6, e=0.8)	$\sim$ 4.5–5.0	STOL or UAV configurations.

8.1.6 Practical Implications

For low-aspect-ratio wings used in STOL aircraft, induced drag forms a major portion of total drag [25]. Designers employ high-lift devices (flaps, slats) and optimized planforms (semi-tapered or near-elliptical) to enhance spanwise lift distribution and span efficiency [26]. However, increasing aspect ratio raises bending moments and structural weight, necessitating a compromise between aerodynamic efficiency and structural feasibility [17, 12].

8.2 Wing Design Strategy Report

8.2.1 Objective

The objective of this stage in the aircraft wing design process is to determine the planform geometry, which governs the aerodynamic characteristics of the aircraft (lift distribution and induced drag). A well-chosen planform balances aerodynamic efficiency, structural strength, manufacturability, and cost — requirements especially critical for STOL-class aircraft [13, 29].

8.2.2 Design strategy

The primary aerodynamic objective is to select a wing geometry that produces a spanwise lift distribution as close as practicable to the ideal elliptical distribution, since that minimizes induced drag for a given span and lift. The induced drag for a finite wing may be expressed as:

$$D_i = \frac{C_L^2}{\pi AR\, e}\, qS, [13,\ 29] \tag{5}$$

or in coefficient form:

$$C_{D_i} = \frac{C_L^2}{\pi AR\, e}, [13,\ 29] \tag{6}$$

where C_L is the lift coefficient, AR the aspect ratio, and e the Oswald efficiency factor (with $e \leq 1$) that accounts for deviations from the ideal elliptical lift distribution [13, 29]. Minimizing induced drag therefore implies maximizing AR and keeping e close to unity while respecting structural and operational constraints.

8.2.3 Choice of planform geometry

Two candidate planforms are considered: the elliptical wing and a mildly tapered wing. The selection rationale balances aerodynamic performance and practical considerations (manufacturing, structural layout, stall characteristics).

Elliptical wing: An elliptical planform yields the theoretical minimum induced drag for a given span because it produces a pure first-harmonic circulation distribution in classical lifting-line theory. Prandtl's lifting-line series expansion represents spanwise circulation $\Gamma(y)$ as:

$$\Gamma(y) = 2bV_\infty \sum_{n=1}^{\infty} A_n \sin(n\theta), \qquad y = \frac{b}{2}\cos\theta, [13,\ 31] \tag{7}$$

and the total lift coefficient can be related to the first harmonic by

$$C_L = \pi AR\, A_1.[13,\ 31] \tag{8}$$

The induced drag coefficient in the series form is

$$C_{D_i} = \frac{1}{\pi AR} \sum_{n=1}^{\infty} nA_n^2.[13,\ 31] \tag{9}$$

If only A_1 is non-zero (pure elliptical distribution) the higher-order terms vanish and we recover

$$C_{D_i} = \frac{C_L^2}{\pi AR}, [13,\ 31] \tag{10}$$

which corresponds to $e = 1$ in the common coefficient form [13, 31]. The local lift per unit span for an elliptical distribution is:

$$L'(y) = L_0\sqrt{1 - \left(\frac{2y}{b}\right)^2}, [13] \tag{11}$$

and the induced downwash for that ideal case is constant along the span:

$$w = \frac{C_L V_\infty}{\pi AR}.[13] \tag{12}$$

While aerodynamically optimal, elliptical wings present important drawbacks: complex curvature complicates spar and rib layout, increases manufacturing cost, and tends to produce abrupt spanwise stall progression (adverse for controllability) [18, 29].

Mildly tapered wing (selected): A mildly tapered straight-edge wing yields a near-elliptical lift distribution with far simpler structure and manufacturing. Typical Oswald efficiency estimates for well-designed tapered wings remain high (e.g. $e \approx 0.95$–0.98) so the induced drag penalty relative to an elliptical wing is small, while structural and cost benefits are substantial [29, 18]. For STOL designs the trade-off strongly favors the tapered planform due to:

- simpler spar/rib geometry and internal load paths,
- easier incorporation of high-lift devices (flaps, slats),
- more benign stall progression (which can be tuned with twist and stall fences).

(The final taper ratio and twist distribution should be optimized later to further approach an elliptical-like lift distribution while preserving manufacturability.)

8.2.4 Mathematical justification and key formulae

The induced drag minimization argument above is the primary aerodynamic justification. Useful relations used in preliminary sizing and justification include:

Aspect ratio $AR = \dfrac{b^2}{S}$. [13]

Induced drag coefficient $C_{D_i} = \dfrac{C_L^2}{\pi AR\, e}$. [13]

Downwash approximation for finite wing $w \approx \dfrac{C_L V_\infty}{\pi AR}$ in near-ideal cases. [13]

Oswald efficiency $e = \dfrac{(A_1)^2}{\sum_{n=1}^{\infty} n A_n^2}$ (definition from lifting-line harmonic coefficients). [31]

Place citations close to the specific formulae and standard values used during the design: the classic references giving these relations are Anderson [13], Raymer [29], Roskam [18], and Kroo [31].

8.2.5 Selected planform parameters

Table 5: Selected planform parameters (preliminary).

Parameter	Value / Range	Reference
Planform type	Mildly tapered wing	[29]
Aspect ratio (AR)	To be optimized (project-specific)	[13]
Oswald efficiency factor (e)	0.95–0.98 (expected)	[29, 18]
Taper ratio	Mild (e.g. 0.4–0.7)	design choice
Twist	Geometric washout to control stall	design stage
High-lift devices	Flaps and possibly slotted flaps for STOL	operational requirement

8.2.6 Practical implications from our approach (design-perspective)

Our approach prioritizes an aerodynamic solution that is practical for manufacturing and robust in operation:

1. Choose a mild taper to approximate elliptical loading while allowing straight spars and constant-rib spacing where possible.
2. Use geometric twist (washout) and/or aerodynamic twist (airfoil variation) to ensure desirable stall progression (root-first).

3. Reserve detailed optimization (taper ratio, planform taper break, twist distribution) for the next design iteration where structural sizing and high-lift device integration are simultaneously considered.

4. Keep AR as high as structural limits and packaging permit; maximize e through planform and twist choices, and by minimizing high-lift device interference drag where possible.

8.3 Fixing Wing Planform Geometry and Aspect Ratio for STOL Aircraft

8.3.1 Abstract

This document discusses the design methodology adopted to determine the wing planform parameters for a STOL (Short Takeoff and Landing) aircraft. The report presents the design considerations, governing aerodynamic relations, and quantitative justification for selecting optimal aspect ratio and taper ratio values suited for STOL operations. [14, 30]

8.3.2 Introduction

The wing planform defines the geometric outline of a wing when viewed from above and has a strong influence on aerodynamic efficiency, lift generation, and structural characteristics. The key geometric parameters defining the planform are the wingspan (b), aspect ratio (AR), taper ratio (λ), and wing area (S). A trapezoidal planform is adopted in this study due to its balance between aerodynamic performance, manufacturing simplicity, and structural efficiency. The objective of this analysis is to identify suitable ranges of aspect ratio and taper ratio for a STOL aircraft, which operates at relatively low speeds and requires high lift during takeoff and landing phases [14, 30].

8.3.3 Design Considerations for STOL Aircraft

The design of a STOL aircraft wing must prioritize lift generation, stall control, and low-speed stability over high-speed efficiency. For short-field operations, the aircraft must generate substantial lift at low speeds and exhibit benign stall characteristics that allow the pilot to retain control even near stall conditions. Hence, design emphasis is placed on achieving high lift coefficients and maintaining steady control behavior.

A trapezoidal wing with mild taper offers several advantages that make it suitable for STOL applications. The aerodynamic efficiency improves through a more uniform lift distribution, and a root-first stall behavior is ensured, enhancing control during critical low-speed maneuvers. Structurally, such a configuration reduces bending moments at the wingtips and simplifies manufacturing. Typical design targets for this study are: $\mathrm{AR} \in [6, 10]$ and $\lambda \in [0.5, 0.8]$. [30, 32]

8.3.4 Planform Geometry Parameters

For a trapezoidal planform the wing area S can be written as:

$$S = \frac{1}{2}\, b\,(C_r + C_t).[14] \tag{13}$$

where C_r and C_t denote the root and tip chord lengths respectively.

8.3.5 Aspect Ratio Derivation

The aspect ratio is defined as

$$\mathrm{AR} = \frac{b^2}{S}.[14] \tag{14}$$

Substituting (**??**) into (14) yields

$$\mathrm{AR} = \frac{2b}{C_r(1+\lambda)}.[14] \tag{15}$$

which links span, root chord and taper ratio for a trapezoidal planform.

8.3.6 Aerodynamic Performance Relations

For a finite wing, the induced drag coefficient is commonly written as

$$C_{D_i} = \frac{C_L^2}{\pi e\,\mathrm{AR}}, [30,\ 14] \tag{16}$$

where e is the Oswald efficiency factor.

The finite-wing lift-curve slope a can be approximated by

$$a = \frac{a_0}{1 + \dfrac{a_0}{\pi e \, \mathrm{AR}}}, [14] \tag{17}$$

with $a_0 \approx 2\pi$ rad^{-1} for thin airfoils in incompressible flow [14].

An empirical approximation for the Oswald efficiency factor used here is:

$$e \approx \frac{1}{1 + \dfrac{2}{\mathrm{AR}} + 60\left(\dfrac{t}{c}\right)^4}, [30,\ 32] \tag{18}$$

where t/c is the thickness-to-chord ratio.

8.3.7 Parametric Study of Aspect Ratio

To evaluate the aerodynamic effects of varying AR, induced drag and induced-only lift-to-drag ratios were calculated using (16) for two representative lift coefficients:

- $C_L = 1.20$ (takeoff/landing condition)
- $C_L = 0.80$ (cruise-like condition)

An Oswald efficiency factor of $e = 0.92$ and $\pi = 3.1416$ are assumed for the parametric table below [14].

Table 6: Parametric analysis of induced drag and induced-only L/D with varying aspect ratio [30].

AR	C_{D_i} @ $C_L = 1.20$	L/D_{ind} @ $C_L = 1.20$	C_{D_i} @ $C_L = 0.80$	L/D_{ind} @ $C_L = 0.80$
6	0.0830	14.45	0.0369	21.68
7	0.0712	16.86	0.0316	25.29
8	0.0623	19.27	0.0277	28.91
9	0.0554	21.67	0.0246	32.53
10	0.0498	24.08	0.0221	36.13

The results show a clear reduction in induced drag and an increase in induced-only L/D with increasing AR [14]. However, structural penalties rise with span, so AR must be chosen as a compromise.

8.3.8 Optimization and Practical Trade-Offs

Although induced drag decreases approximately with 1/AR (see (16)), structural weight and complexity increase with span (span-related quantities tend to scale with b^2). Considering aerodynamic benefits and structural/manufacturing penalties, AR values between 7 and 8 offer a practical compromise for STOL aircraft [30, 32]. This choice balances improved low-speed lift/efficiency with manageable structural loads and weight.

Common STOL high-wing designs that use similar trade-offs include the de Havilland DHC-6 Twin Otter and the Pilatus PC-6 Porter, which prioritize short-field capability and low-speed controllability [14].

8.3.9 Taper Ratio Considerations

Taper ratio significantly influences lift distribution, stall progression, and structural behavior. A mild taper $\lambda \in [0.5, 0.8]$ yields a near-elliptical lift distribution (thus reducing induced drag) while encouraging a root-first stall progression that helps maintain aileron effectiveness near stall [30]. Excessive taper risks abrupt tip-stall and manufacturing difficulty (very small tip ribs); too little taper concentrates bending loads toward the root. The selected range $\lambda = 0.5$–0.8 is therefore recommended for STOL wings where both aerodynamic and structural considerations are important [32].

8.4 Wing Sweep and Dihedral Angle Considerations for STOL Aircraft Design

8.4.1 Introduction

Short Take-Off and Landing (STOL) aircraft must generate high lift at low speeds while maintaining stability and controllability during takeoff and landing. Wing geometry — particularly sweep angle (Λ), dihedral angle (Γ), and wing position (z_w) — directly affects aerodynamic efficiency and static stability. This report mathematically justifies the design trends and validates them through real-world examples of proven STOL aircraft. [16]

8.4.2 Sweep Angle

Definition: The sweep angle (Λ) is the angle between the lateral axis and the leading (or trailing) edge of the wing. An unswept wing corresponds to $\Lambda = 0°$. [15]

Effect on Flow and Lift: Only the component of freestream velocity normal to the leading edge contributes to lift. The effective velocity component may be written as

$$V_{\text{eff}} = V_\infty \cos\Lambda, [15] \tag{19}$$

which follows from simple vector projection. Therefore dynamic pressure and lift scale as

$$L \propto V_{\text{eff}}^2 = V_\infty^2 \cos^2\Lambda, [15] \tag{20}$$

and the sectional lift coefficient for a swept wing can be approximated in low-speed theory as

$$C_{L,\text{swept}} \approx C_{L,0} \cos^2\Lambda. [15] \tag{21}$$

Equations (19)–(21) show that as Λ increases the effective lift decreases — hence STOL aircraft typically use $\Lambda \approx 0°$ (unswept) to maximize low-speed lift.

8.4.3 Dihedral Angle and Lateral Stability

Definition: The dihedral angle (Γ) is the upward inclination of the wings relative to the horizontal plane. It improves lateral (roll) stability by generating a restoring moment during sideslip [19].

Aerodynamic Effect: Resolving the lift vector into vertical and lateral components gives

$$L_{\text{vertical}} = L\cos\Gamma, \tag{22}$$

$$L_{\text{lateral}} = L\sin\Gamma, \tag{23}$$

so a small dihedral ($\Gamma \sim 1°$–$2°$) produces a lateral restoring component with negligible loss of vertical lift. [15]

Lateral Stability Derivative: The rolling-moment derivative with sideslip is defined as

$$C_{l_\beta} = \frac{\partial C_l}{\partial \beta}, \tag{24}$$

and a negative C_{l_β} indicates a restoring (stabilizing) roll moment [34].

A common linear approximation that captures the dominant keel (height) effect is

$$C_{l_\beta} \approx -\frac{dC_L}{d\alpha}\frac{z_w}{b}, [19,\ 34] \tag{25}$$

where $dC_L/d\alpha$ is the wing lift-curve slope, z_w the wing aerodynamic center height above the CG, and b the wingspan. Equation (25) highlights why raising the wing (increasing z_w) strengthens lateral stability.

8.4.4 Wing Configuration

Overview: Wing vertical position relative to the fuselage centerline influences static stability, structural layout, ground-effect utilization, and handling qualities. The three common configurations are high-wing, mid-wing, and low-wing.

Table 7: Comparison of Wing Configurations and Aerodynamic Characteristics

Parameter	**High-Wing**	**Mid-Wing**	**Low-Wing**
z_w/b (Normalized height)	0.07–0.10	0.03–0.05	0.00–0.02
C_{l_β} (approx.)	-0.40 to -0.55	-0.15 to -0.25	-0.05 to -0.10
Ground effect influence	High	Moderate	Reduced
Structural weight efficiency	Moderate	Low	High
Roll stability (qualitative)	Strong	Neutral	Weak
Visibility (pilot)	Excellent	Average	Poor
Field clearance	Excellent	Moderate	Poor
Aerodynamic interference	Minimal	Moderate	High

Mathematical Interpretation: Including a simple dihedral contribution (with empirical coefficient $k_d \approx 1$) the lateral stability approximation can be extended:

$$C_{l_\beta} \approx -\frac{dC_L}{d\alpha}\frac{z_w}{b} - k_d \frac{dC_L}{d\alpha}\frac{\Gamma\, y_{\text{eff}}}{b}, [19,\ 34] \tag{26}$$

where y_{eff} is an effective spanwise station (typically $0.25b$–$0.35b$). The first term (keel effect) usually dominates, so increasing z_w (high-wing) produces a more negative C_{l_β} and thus stronger restoring roll moments.

Justification for High-Wing in STOL Aircraft: For STOL operations, quantitative and operational benefits of high-wing geometry include:

- **Enhanced roll stability:** higher z_w/b increases $|C_{l_\beta}|$ significantly (see (25)). [19]
- **Improved lift in ground effect:** high wings benefit more from ground-effect augmentation during take-off/landing. [15]
- **Reduced interference drag:** spacing from the fuselage mitigates vortex interactions. [**?**]
- **Operational safety:** greater clearance reduces FOD risk and supports rough-field ops.
- **Pendulum stability:** a high wing places the aerodynamic center above CG, aiding static stability. [35]

8.4.5 Real-World STOL Aircraft Examples

Table 8: Representative STOL Aircraft and Wing Configurations

Aircraft	**Wing Type**	**Sweep (Λ)**	**Dihedral (Γ)**
DHC-6 Twin Otter	High-wing	0°	2°
Pilatus PC-6 Porter	High-wing	0°	1.5°
Cessna 208 Caravan	High-wing	0°	2°
Boeing C-17 Globemaster III	High-wing	0°	2°

8.4.6 Summary of Design Recommendations

Table 9: Design Recommendations Based on Theoretical and Empirical Evidence

Parameter	**Design Choice**	**Mathematical Basis**	**Reference**
Sweep (Λ)	0° (unswept)	$C_L \propto \cos^2\Lambda$ (Eq. (21))	[15, **?**]
Dihedral (Γ)	1°–2°	$L_v = L\cos\Gamma$, $C_{l_\beta} < 0$ (Eqs. (22),(25))	[19, 34]
Wing Position	High-wing	$C_{l_\beta} \propto -\frac{z_w}{b}$ (strong stability)	[19, 35]

8.5 Horizontal Tail Design Report for High-Wing STOL Aircraft

8.5.1 Introduction

The tail assembly (empennage) ensures the trim, stability, and control of an aircraft. For this design study focused on a Short Takeoff and Landing (STOL) aircraft with a high-wing configuration, an aft tail layout is selected. The horizontal tail is sized and located based on longitudinal trim and static stability principles [29, **?**, 33].

8.5.2 Assumptions

To simplify the horizontal tail sizing process, several standard aerodynamic assumptions are made [29, **?**, 33]:

1. The aircraft center of gravity (C.G.) lies close to the thrust line, making thrust-induced pitching moments negligible.
2. The aerodynamic pitching moment of the tail airfoil (M_{0h}) is neglected, as its effect is small compared to the moment due to tail lift.
3. Flow is assumed steady, incompressible, and subsonic. Aerodynamic coefficients are linearized for small angles of attack:

   $$C_L = a(\alpha + i),$$

   where a is the lift curve slope [29].
4. The aircraft structure is considered rigid, ignoring aeroelastic deformations.
5. The downwash angle at the tail varies linearly with the wing angle of attack:

   $$\epsilon = \frac{d\epsilon}{d\alpha}\alpha,$$

   where typical values for $\frac{d\epsilon}{d\alpha}$ are 0.3–0.5 for high-wing configurations [33].

These assumptions allow a first-order analytical estimation of the tail geometry and stability characteristics, suitable for preliminary design.

8.5.3 Longitudinal Trim Condition:

For longitudinal equilibrium about the C.G.:

$$\sum M = 0 \Rightarrow M_w + M_h + M_L = 0,$$

(standard moment balance; see [29, **?**]).

Moment Components:

$$M_L = \tfrac{1}{2}\rho V^2 S_w C_{L_w}(h - h_0)\bar{c}, \tag{27}$$

$$M_h = -\tfrac{1}{2}\rho V^2 S_h C_{L_h} l_h, \tag{28}$$

$$M_w = \tfrac{1}{2}\rho V^2 S_w C_{m_0}\bar{c}. \tag{29}$$

(Equations 27–29 follow standard derivations in [29].)

Trim Equation and Tail Volume Coefficient: After substitution and non-dimensionalization the trim condition becomes:

$$C_{m_0} + C_{L_w}(h - h_0) - V_H C_{L_h} = 0,$$

where the horizontal tail volume coefficient is defined as:

$$V_H = \frac{l_h S_h}{S_w \bar{c}}.$$

These standard forms are given in [29, **?**].

8.5.4 Horizontal Tail Volume Coefficient

This non-dimensional parameter expresses tail effectiveness:

$$V_H = \frac{l_h S_h}{S_w \bar{c}}.$$

Typical ranges of V_H are provided in Table 10 (values from [29]).

Table 10: Typical Values of Horizontal Tail Volume Coefficient V_H.

Aircraft Type	V_H **Range**	**Description**
Transport Aircraft	0.8–1.1	High stability
Fighter Aircraft	0.2–0.5	High maneuverability
STOL Aircraft	0.9–1.2	Strong control authority

For STOL configurations, $V_H \approx 1.0$ balances controllability and stability [29].

8.5.5 Tail Airfoil Selection

A NACA 0009 symmetric airfoil is selected for the horizontal tail due to:

- Zero lift at zero angle of attack, simplifying trim [**?**].
- Low pitching moment coefficient [33].
- Linear lift curve for small angles of attack [29].

8.5.6 Tail Incidence Angle

From the trim equation:

$$C_{m_0} + C_{L_w}(h - h_0) - V_H C_{L_h} = 0,$$

and with

$$C_{L_h} = a_h(\alpha + i_h - \epsilon),$$

the required tail incidence for trim follows:

$$i_h = \frac{C_{L_h}}{a_h} - \alpha + \epsilon.$$

Typically, for high-wing STOLs, a small nose-down tail incidence $i_h \approx 1°$–$3°$ is used [**?**].

8.5.7 Tail Geometry

Aspect Ratio: The tail aspect ratio is

$$AR_h = \frac{b_h^2}{S_h},$$

with typical design choices $AR_h \approx 3$–5 for horizontal tails [33].

Taper Ratio:

$$\lambda_h = \frac{C_{tip}}{C_{root}}.$$

A taper ratio of 0.3–0.6 gives near-elliptical loading and delays tip stall [29].

8.5.8 Mean Aerodynamic Chord

$$\bar{c}_h = \frac{2}{3} C_{root} \frac{1 + \lambda_h + \lambda_h^2}{1 + \lambda_h}, \qquad S_h = b_h \bar{c}_h,$$

as standard in planform geometry references [29].

8.5.9 Tail Arm Selection

The tail arm (l_h) — distance between the C.G. and tail aerodynamic center — influences stability and trim captured by $V_H = \dfrac{l_h S_h}{S_w \bar{c}}$. For fixed V_H, increasing l_h allows smaller S_h, improving efficiency [29].

*Wetted Area Minimization: To compromise between aerodynamic surface and fuselage wetted area, approximate wetted areas are:

$$S_{wet} = S_{wet,fuselage} + S_{wet,tail},$$

with

$$S_{wet,fuselage} \approx \tfrac{1}{2}\pi D_f l_h, \qquad S_{wet,tail} \approx 2S_h.$$

Using $S_h = \dfrac{S_w \bar{c} V_H}{l_h}$ yields:

$$S_{wet}(l_h) = \tfrac{1}{2}\pi D_f l_h + \frac{2S_w \bar{c} V_H}{l_h}.$$

Minimizing S_{wet} with respect to l_h gives the analytical optimum:

$$l_{opt} = \sqrt{\frac{4S_w \bar{c} V_H}{\pi D_f}},$$

which provides a compact first-order estimate for tail arm selection [**?**].

8.5.10 Design Guideline

For high-wing STOL aircraft recommended ranges are:

$$V_H = 0.9\text{–}1.2, \quad \frac{l_h}{L} = 0.45\text{–}0.6, \quad \eta_h = 0.85\text{–}0.95,$$

with $l_h/L \approx 0.5$ a common practical choice that balances stability, control authority and drag [29, 33].

8.5.11 Parameter Selection Summary

- Tail Volume Coefficient: $V_H = 0.9$–1.2 [29]
- Tail Arm Ratio: $l_h/L = 0.45$–0.6 [29]
- Aspect Ratio: $AR_h = 3$–5 [33]
- Taper Ratio: $\lambda_h = 0.3$–0.6 [29]
- Airfoil: NACA 0009 (symmetric)
- Tail Efficiency: $\eta_h = 0.85$–0.95 [29]
- Incidence Angle: $i_h = 1°$–$3°$ nose-down

9 The Multhopp Method

The Multhopp Method represents a significant milestone in aerodynamic theory, bridging the gap between Prandtl's Lifting-Line Theory and modern Lifting-Surface methods. It provides a rigorous yet computationally efficient approach to predicting the aerodynamic load distribution over finite wings of arbitrary planform, especially relevant for swept and low-aspect-ratio configurations.

Early aerodynamic design relied on Prandtl's lifting-line theory, which reduced the three-dimensional flow field to a one-dimensional line of bound vortices. While effective for high-aspect-ratio straight wings, this simplification failed for modern configurations such as swept wings and delta forms. The need for more accurate predictions of spanwise load distributions in such configurations led to the development of lifting-surface methods, of which Multhopp's is among the most efficient.

While other methods, such as the Weissinger method, simplified the problem by using a single discrete lifting line (typically at the quarter-chord), this approach only implicitly captured chordwise effects and could not resolve the chordwise load distribution. Multhopp's method is fundamentally more rigorous as it treats the wing as a continuous two-dimensional lifting surface. By explicitly integrating the load distribution in both the chordwise and spanwise directions, it provides a much more accurate model for complex configurations, especially those where lifting-line theory fails.

Multhopp's goal was to construct a method that was both theoretically rigorous and computationally practical. Previous approaches—such as Falkner's vortex lattice or Garner's continuous lifting surface methods—were either too approximate or computationally cumbersome. The Multhopp method achieved balance through intelligent discretization, precomputed influence functions, and mathematically optimized pivotal points.

The Multhopp Method transformed lifting-surface theory into an efficient computational procedure. By defining auxiliary coordinates (X, Y), establishing influence functions (i, j), introducing a cosine-based angular discretization, and explicitly correcting the weak logarithmic singularity in the self-induction terms, it achieves numerical stability and improved accuracy in predicting lift and induced drag distributions for subsonic wings.

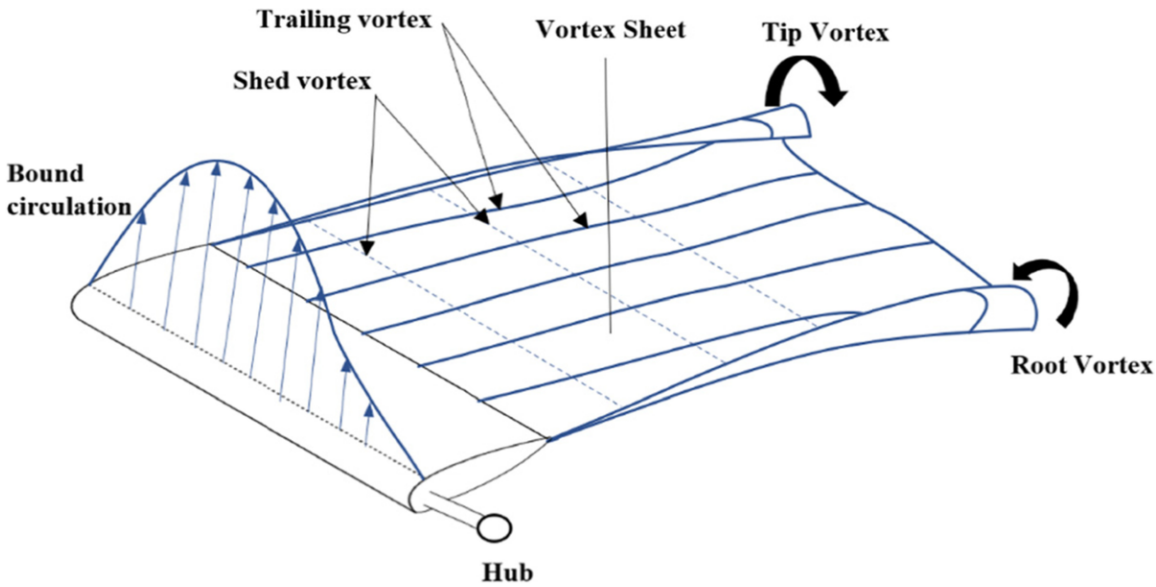

Figure 13: Representation of a lifting surface as a continuous vortex sheet, showing bound circulation and the trailing vortex wake [59].

9.1 Theoretical Foundation

9.1.1 Fundamental Flow Equations

Starting from the continuity equation for steady, compressible flow[55]:

$$\frac{U}{\rho}\frac{\partial \rho}{\partial x} + \frac{\partial u}{\partial x} + \frac{\partial v}{\partial y} + \frac{\partial w}{\partial z} = 0 \tag{30}$$

where U is the free-stream velocity and (u, v, w) are small perturbation components. By introducing the enthalpy potential I such that $dp/\rho = dI$, the governing field equation becomes the linearized potential equation[55]:

$$\frac{\partial^2 I}{\partial x^2}\left(1 - \frac{U^2}{a^2}\right) + \frac{\partial^2 I}{\partial y^2} + \frac{\partial^2 I}{\partial z^2} = 0 \tag{31}$$

For subsonic speeds ($U < a$), this equation governs the potential flow field around the lifting surface.

9.1.2 Derivation of the Downwash Integral

The enthalpy potential field $I(x, y, z)$ for the lifting surface, represented as a sheet of doublets, is given by[55]:

$$I(x, y, z) = \frac{-zU^2}{8\pi} \iint_S \frac{l(x_0, y_0)dx_0 dy_0}{[(x - x_0)^2 + (y - y_0)^2 + z^2]^{3/2}} \tag{32}$$

The induced downwash velocity w must equal the local slope of the wing surface, giving the boundary condition[55]:

$$\alpha = -\frac{w}{U} \tag{33}$$

The downwash velocity w is obtained from the potential I by integrating the third Euler's equation[55]:

$$w(x, y, z) = \frac{-1}{U} \int_{-\infty}^{x} \frac{\partial I}{\partial z}(x', y, z)dx' \tag{34}$$

This derivation involves two key steps. First, the derivative $\frac{\partial I}{\partial z}$ is evaluated in the wing plane ($z = 0$)[55]:

$$\frac{\partial I}{\partial z}(x', y, 0) = \frac{-1}{4\pi}\frac{U^2}{2} \iint_S \frac{l(x_0, y_0)dx_0 dy_0}{[(x' - x_0)^2 + (y - y_0)^2]^{3/2}} \tag{35}$$

Second, the inner integral with respect to x' from Eq. (34) is evaluated as[55]:

$$\int_{-\infty}^{x} \frac{dx'}{[(x'-x_0)^2+(y-y_0)^2]^{3/2}} = \frac{1}{(y-y_0)^2}\left\{1 + \frac{x-x_0}{\sqrt{[(x-x_0)^2+(y-y_0)^2]}}\right\} \tag{36}$$

Substituting (34), (35), and (36) into the boundary condition $\alpha = -w/U$ yields the final singular integral equation (Equation 37 in the source report)[55]:

$$\alpha(x, y) = \frac{-1}{8\pi} \iint_S \frac{l(x_0, y_0)}{(y - y_0)^2}\left\{1 + \frac{x - x_0}{\sqrt{[(x - x_0)^2 + (y - y_0)^2]}}\right\} dx_0 dy_0 \tag{37}$$

9.1.3 Kutta-Joukowsky Constraint

The Kutta-Joukowsky condition ensures that $l(x_0, y_0) \to 0$ at the trailing edge, guaranteeing smooth flow separation citeMulthopp1950.

9.2 Chordwise Integration and Influence Functions

9.2.1 Auxiliary Coordinates and Load Distribution

The local integration over the chord uses the coordinates [55]:

$$X = \frac{x - x_{0l}}{c(y_0)}, \quad Y = \frac{y - y_0}{c(y_0)}, \quad X_0 = \frac{x_0 - x_{0l}}{c(y_0)} \tag{38}$$

The load distribution is then expressed as [55]:

- Lift-related: $l_0 = a_0 \cot\frac{\varphi}{2}$, where $\varphi = \cos^{-1}(1 - 2X_0)$, and $C_L = a_0\frac{\pi}{2}$
- Moment-related: $l_1 = a_1\left[\cot\frac{\varphi}{2} - 2\sin\varphi\right]$, where $C_{L1} = 0$, and $C_{m1} = a_1\frac{\pi}{8}$

9.2.2 Influence Functions $i(X,Y)$ and $j(X,Y)$

The influence functions define the induced downwash due to unit lift or moment distribution.

Lift Influence Function $i(X,Y)$:

$$i(X,Y) = 1 + \frac{1}{\pi}\int_0^{\pi} \frac{(1+\cos\varphi)(2X-1+\cos\varphi)\,d\varphi}{\sqrt{(2X-1+\cos\varphi)^2+4Y^2}} \tag{39}$$

Moment Influence Function $j(X,Y)$:

$$j(X,Y) = \frac{4}{\pi}\int_0^{\pi} \frac{(2\cos^2\varphi+\cos\varphi-1)(2X-1+\cos\varphi)\,d\varphi}{\sqrt{(2X-1+\cos\varphi)^2+4Y^2}} \tag{40}$$

Note: i and j are generally elliptic-type integrals and are most practically used via tabulated/charted values (Multhopp's Figures) [55].

9.3 Spanwise Discretization and Angular Transformation

9.3.1 Angular Coordinate Transformation

The wing span is expressed using an angular coordinate transformation[55]:

$$\eta = \cos\theta \tag{41}$$

The discrete spanwise stations (pivotal points) are defined by[55]:

$$\theta_n = \frac{\pi}{2} - \frac{n\pi}{m+1}, \quad \eta_n = \cos\theta_n = \sin\frac{n\pi}{m+1} \tag{42}$$

The indices n take values $0, \pm1, \pm2, ..., \pm\frac{m-1}{2}$, representing the discrete spanwise stations used in the Multhopp method.

9.3.2 Boundary Coordinates and Nondimensional Parameters

To simplify the analysis, nondimensional coordinates are defined as [55]:

$$\eta = \frac{y}{b/2}, \qquad \xi = \frac{x}{b/2} \tag{43}$$

The corresponding nondimensional lift and moment distributions per unit span are defined as[55]:

$$\gamma = \frac{\Gamma}{bU} = \frac{C_L c}{2b}, \qquad \mu = \frac{C_m c}{2b} \tag{44}$$

These dimensionless quantities represent the normalized lift and pitching moment intensities along the span and are the unknowns solved by the Multhopp method.

9.4 Spanwise Integration and Linear System Formulation

After chordwise integration, the spanwise downwash equation becomes [55]:

$$\alpha(\xi,\eta) = -\frac{1}{2\pi}\int_{-1}^{1} \frac{\gamma(\eta')i(\xi,\eta,\eta') + \mu(\eta')j(\xi,\eta,\eta')}{(\eta-\eta')^2}\,d\eta' \tag{45}$$

9.4.1 Interpolation Function

The trigonometric interpolation function $g_n(\theta)$ is defined as [55]:

$$g_n(\theta) = -\frac{\sin\theta_n}{(m+1)\cos((m+1)\theta_n)} \cdot \frac{\sin((m+1)\theta)}{\cos\theta - \cos\theta_n} \tag{46}$$

9.4.2 Downwash Integral in Angular Coordinates

The downwash integral can be expressed with the angular coordinate $\eta = \cos\theta$ [55]:

$$\alpha(\theta) = \frac{-1}{2\pi} \int_0^{\pi} \frac{(\gamma \cdot i)(\theta') \cdot \sin\theta' d\theta'}{(\cos\theta - \cos\theta')^2} \tag{47}$$

9.4.3 Interpolation-based Downwash Integral

Expressing the downwash integral in angular coordinates and using the interpolation basis yields [55]:

$$\alpha(\theta) = -\frac{1}{2\pi} \sum_{n=-\frac{m-1}{2}}^{\frac{m-1}{2}} (\gamma \cdot i)_n \int_0^{\pi} \frac{g_n(\theta') \sin\theta' \, d\theta'}{(\cos\theta - \cos\theta')^2} \tag{48}$$

9.4.4 Linear Algebraic Formulation and Singularity Correction

The system of linear equations is enforced at the pivotal stations (indexed by v). The interpolation functions are used to represent the spanwise integral, resulting in a set of coefficients b_{vn} [55].

A simple application would yield:

$$\alpha_v = b_{vv}(\gamma \cdot i)_v - \sum_{n=-\frac{m-1}{2}}^{\frac{m-1}{2}} b_{vn}(\gamma \cdot i)_n \tag{49}$$

where $b_{vv} = \frac{m+1}{4\sin\theta_v}$ and $b_{vn} = \frac{\sin\theta_n}{(m+1)(\cos\theta_n - \cos\theta_v)^2}$ for odd $|n-v|$ and 0 for even $|n-v|$ [55].

However, this formulation fails to account for a logarithmic singularity in the self-inducing term b_{vv} [56]. The influence function $i(X,Y)$ near $Y=0$ contains a term $K_1(X)Y^2 \ln|Y|$. When integrated, this singularity requires a correction [55].

Multhopp calculates this correction, $\Delta\alpha_v$, as[55]:

$$\Delta\alpha_v = 0 \cdot 1302 \; \gamma_v K_1 \left(\frac{b}{2c_v}\right)^2 (\eta_{v+1} - \eta_{v-1}) \tag{50}$$

This correction is added to the main diagonal term $b_{vv} i_{vv} \gamma_v$. The system of equations is rewritten using a corrected diagonal influence coefficient, $\overline{i_{vv}}$ (and similarly $\overline{j_{vv}}$ for the moment term)[55]:

$$\alpha_v = b_{vv}(\gamma_v \overline{i_{vv}} + \mu_v \overline{j_{vv}}) - \sum_{n=-\frac{m-1}{2}}^{\frac{m-1}{2}} b_{vn}(\gamma_n i_{vn} + \mu_n j_{vn}) \tag{51}$$

The corrected coefficient $\overline{i_{vv}}$ is defined as [55]:

$$\overline{i_{vv}} = i_{vv} + 0 \cdot 1302 \; K_1 \left(\frac{b}{2c_v}\right)^2 \cdot \frac{4 \; sin \; \theta_v}{m+1} (\eta_{v+1} - \eta_{v-1}) \tag{52}$$

The K_1 term depends on the chordwise pivotal point position (e.g., $X = 0.75$). For the standard pivotal points, the numerical formulas are [55]:

- At 0.75c: $\overline{i_{vv}} = 1 \cdot 884_7 + 0 \cdot 510_3(\dots) \left(\frac{b}{2c_v}\right)^2$
- At 0.9045c: $\overline{i_{vv}}' = 1 \cdot 974_2 + 0 \cdot 623_4(\dots) \left(\frac{b}{2c_v}\right)^2$ and $\overline{j'_{v_v}} = 0 \cdot 2958 - 4 \cdot 805(\dots) \left(\frac{b}{2c_v}\right)^2$
- At 0.3455c: $\overline{i_{vv}}'' = 1 \cdot 405_5 + 1 \cdot 008_7(\dots) \left(\frac{b}{2c_v}\right)^2$ and $\overline{j_v}'' = 3 \cdot 170_2 + 5 \cdot 758(\dots) \left(\frac{b}{2c_v}\right)^2$

9.5 Resultant Aerodynamic Quantities

9.5.1 Total Lift Coefficient

The total lift coefficient $\overline{C}_L$ is calculated by integrating the nondimensional lift distribution γ[55]:

$$\overline{C}_L = A \int_{-1}^{1} \gamma \, d\eta = \frac{\pi A}{m+1} \sum_{n=-\frac{m-1}{2}}^{\frac{m-1}{2}} \gamma_n \cos \frac{\pi n}{m+1} \tag{53}$$

9.5.2 Induced Drag Coefficient

The induced drag coefficient C_{Di} is determined from the spanwise load distribution[55]:

$$C_{Di} = \pi A \left[\frac{\gamma_0^2}{4} + \frac{1}{2} \sum_{1}^{\frac{m-1}{2}} \gamma_n^2 - \sum_{\nu=1,3,5\ldots} \sum_{n=0,2,4\ldots} a_{\nu n} \gamma_\nu \gamma_n \right] \tag{54}$$

9.6 Application to Discontinuous Boundary Conditions (Flaps)

In wings equipped with flaps or other control surfaces, the aerodynamic load distribution changes abruptly at the hinge line, creating a discontinuity between the main wing and flap regions. Since the Multhopp method assumes smooth variations of the load function, such discontinuities are replaced by an equivalent continuous distribution that produces nearly the same lift and pitching moment.

To account for this, the effect of flap deflection is represented by an equivalent change in angle of attack. The ratio

$$\frac{d\alpha}{d\delta} = \frac{\partial C_L / \partial \delta}{\partial C_L / \partial \alpha} \tag{55}$$

defines how flap deflection δ corresponds to an equivalent incidence change α.

For cases using two chordwise pivotal points, separate effective angles—one near the leading edge and one near the trailing edge—are introduced so that the combined lift and moment match those of the actual flap deflection.

9.6.1 Equivalent Incidence Concept

For a given flap deflection δ, the local aerodynamic increments in lift and moment coefficients per unit span are denoted by $C_{L,\delta}$ and $C_{m,\delta}$, respectively.

These are related to the equivalent incidence increments α' and α'' at the two chordwise pivotal points (typically near the leading and trailing edges) through a linear relation:

$$\begin{bmatrix} C_{L,\delta} \\ C_{m,\delta} \end{bmatrix} = \begin{bmatrix} K_1 & K_2 \\ K_3 & K_4 \end{bmatrix} \begin{bmatrix} \alpha' \\ \alpha'' \end{bmatrix} \tag{56}$$

where K_1–K_4 are aerodynamic influence coefficients obtained from chordwise integration of the lifting-surface equations [55]. These coefficients depend only on the airfoil geometry and the chordwise positions of the pivotal points.

By inverting this relation, the equivalent incidences are determined as

$$\begin{bmatrix} \alpha' \\ \alpha'' \end{bmatrix} = \mathbf{K}^{-1} \begin{bmatrix} C_{L,\delta} \\ C_{m,\delta} \end{bmatrix} \tag{57}$$

The equivalent incidences α' and α'' are then introduced directly into the boundary conditions of the Multhopp downwash equation as additional effective angles of attack.

This modifies only the right-hand side (forcing vector) of the system, while the aerodynamic influence matrix remains unchanged. This approach enables the Multhopp method to include flap effects within its linear framework, allowing accurate estimation of lift and moment changes for flapped or high-lift wings without modifying the overall numerical procedure.

9.7 Remarks

- Practical implementation of the method demands a thorough understanding of its theoretical underpinnings, particularly the analytical treatment of singularities and the strategic selection of pivotal points.
- As a numerical technique, the method is realized through computational code. A robust implementation must accurately generate the pre-calculated influence functions (i and j), systematically build the linear system's influence matrix based on the chosen wing geometry, apply the analytical corrections for the singular diagonal terms, and efficiently solve the resulting system of linear algebraic equations for the spanwise load and moment distributions.

10 Structural Analysis

10.1 Overview

This section establishes a simplified yet technically defensible model for evaluating the global bending and torsional feasibility of the wing–propulsion integration. No formulas are assumed without citation; all approximations are explicitly justified.

The objectives of this analysis are:

1. Derive the simplified cantilever beam relations governing deflection and bending moment.
2. Compute the root bending moment for a chord–proportional loading model.
3. Determine the second moment of area I for a NACA 4412 airfoil using the K_A, K_I formulation.
4. Evaluate the maximum bending stress, safety factor, and qualitative structural feasibility.
5. Apply the Bredt–Batho thin–walled torsion theory to estimate shear stresses and twist due to propeller torque.

10.2 Beam Model and Governing Equations

For a half–span cantilevered wing, the coordinate y is defined from the root ($y = 0$) to the tip ($y = b/2$). The differential equilibrium and compatibility relations are those of Euler–Bernoulli beam theory [74]:

$$\frac{dS}{dy} = q(y), \qquad \text{(shear equilibrium)} \tag{58}$$

$$\frac{dM}{dy} = S(y), \qquad \text{(moment equilibrium)} \tag{59}$$

$$\frac{d\theta}{dy} = \frac{M(y)}{E\,I(y)}, \qquad \text{(curvature relation)} \tag{60}$$

$$\frac{dw}{dy} = \theta(y), \qquad \text{(slope definition).} \tag{61}$$

The boundary conditions for a cantilevered configuration are:

$$M(b/2) = 0, \qquad S(b/2) = 0, \qquad \theta(0) = 0, \qquad w(0) = 0.$$

Under small–deflection assumptions, superposition is valid for distributed aerodynamic and concentrated fuselage loads.

10.3 Simplified Constant–Curvature Approximation

Following the method in [74], the curvature $\kappa(y) = M(y)/(EI(y))$ is approximated by its root value $\kappa_0 = M_0/(EI_0)$, yielding

$$\theta(y) \approx \kappa_0 y, \qquad w(y) \approx \frac{\kappa_0 y^2}{2}. \tag{62}$$

This provides a closed–form estimate for the slope and deflection without numerical integration.

10.4 Root Bending Moment Derivation

For a spanwise load $q(y)$ proportional to the local chord $c(y)$, the root moment can be approximated as (Equation (40) of [74]):

$$M_0 = \frac{NW_{\text{fuse}}\,b^2}{12}\frac{1+2\lambda}{1+\lambda}, \tag{63}$$

where $\lambda = c_t/c_r$ is the taper ratio, b the total span, and NW_{fuse} the effective fuselage load.

For our airfoil structure ($\lambda = 0.4$), Equation (63) simplifies to

$$M_0 = \frac{NW_{\text{fuse}}\, b^2}{9.33}. \tag{64}$$

10.5 Airfoil Area and Second Moment of Area

From [75], the exact definitions for an airfoil of chord c, upper and lower surfaces $Z_u(x)$ and $Z_\ell(x)$, are:

$$A = \int_0^c [Z_u(x) - Z_\ell(x)]\, dx, \tag{65}$$

$$I = \int_0^c \left[(Z_u - \bar{z})^3 - (Z_\ell - \bar{z})^3\right] dx. \tag{66}$$

For preliminary design these are approximated as

$$A \approx K_A\, c^2 \tau, \qquad K_A \approx 0.60, \tag{67}$$

$$I \approx K_I\, c^4\, \tau(\tau^2 + \epsilon^2), \qquad K_I \approx 0.036, \tag{68}$$

where $\tau = t/c$ (thickness ratio) and $\epsilon = h/c$ (camber ratio).

10.6 Numerical Evaluation

Given parameters:

$$\rho = 1.22\ \text{kg/m}^3 (10k\ ft\ altitude), \qquad V = 20\ \text{m/s}, \qquad S = 0.15\ \text{m}^2,$$
$$C_L = 6.5, \qquad m_{\text{fuse}} = 15\ \text{kg}, \qquad g = 9.81\ \text{m/s}^2.$$

Lift (at Takeoff):

$$L = \tfrac{1}{2}\rho V^2 S C_L = 237.9\ \text{N}. \tag{69}$$

Fuselage Weight: The numerator of the force balance required for the wing to support the aircraft's weight (MTOW) is given by:

$$L - NW_{\text{wing}} = NW_{\text{fuse}} \tag{70}$$

The MTOW is given by the total mass $m_{\text{MTOW}} = 15$ kg as in the problem statement. The maximum wing weight budget for a STOL aircraft is typically in the range of 10–15% of the MTOW [77, 78]. We conservatively adopt 12.5% for W_{wing}:

$$\begin{aligned} W_{\text{wing}} &= 0.125 \times (m_{\text{MTOW}} \times g) \\ &= 0.125 \times (15\ \text{kg} \times 9.81\ \text{m/s}^2) \\ &= 18.39\ \text{N}. \end{aligned}$$

Geometry: From the aspect ratio of $AR = 4.15$,

$$b = \sqrt{AR\, S} = 0.7889\ \text{m}, \qquad c = S/b = 0.1901\ \text{m}.$$

Root Bending Moment: Using Equation (63) with $\lambda = 0.4$ and the computed value of Equation (70) (= 219.51 N.), derived from the Lift L in (69), the wing weight W_{wing}, and load factor N (=1 at steady state),

$$M_0 = \frac{W_{\text{fuse}} b^2}{9.33} = 14.646\ \text{N}\cdot\text{m}. \tag{71}$$

Second Moment of Area: For NACA 4412 ($\tau = 0.12$, $\epsilon = 0.04$) via Equation (68),

$$I = 0.036\, c^4 \tau(\tau^2 + \epsilon^2) = 9.007 \times 10^{-8}\ \text{m}^4.$$

Maximum Bending Stress:

$$\sigma_{\max} = \frac{M_0 z}{I}, \qquad z = t/2 = 0.00949 \text{ m}, \tag{72}$$

$$\sigma_{\max} = \frac{14.646 \times 0.00949}{9.007 \times 10^{-8}} = 1.543 \text{ MPa}. \tag{73}$$

Margin of Safety: For $\sigma_{\text{allow}} = 250$ MPa (Mild Steel),

$$\text{MoS} = \frac{\sigma_{\text{allow}}}{\sigma_{\max}} - 1 = 161.022.$$

Hence the simplified design is **extremely** structurally feasible. The moments due to the loading of the propeller are ignored due to the negligble weight of it (0.71oz wt = 0.19N $\ll$ 237.9N).

10.7 Torsional Response via Bredt–Batho Theory

The airfoil is idealised as a thin–walled closed section of median area A_m and uniform thickness t. The classical Bredt–Batho relations [76, 79] are:

$$T = 2A_m q, \qquad q = \frac{T}{2A_m}, \tag{74}$$

$$\tau = \frac{q}{t} = \frac{T}{2A_m t}, \tag{75}$$

$$J \approx \frac{4A_m^2 t}{L_{\text{mid}}}, \qquad \theta' = \frac{T}{GJ}. \tag{76}$$

Assumed Parameters:

$$c = 0.1901 \text{ m}, \qquad t = 1.5 \text{ mm} = 0.0015 \text{ m},$$

$$\tau = 0.12, \qquad A_m = \frac{\tau c^2}{2} = 1.5 \times 10^{-3} \text{ m}^2,$$

$$L_{\text{mid}} \approx 1.6c = 0.253 \text{ m}, \qquad G = 26 \times 10^9 \text{ Pa},$$

$$T = 0.20 \text{ N}\cdot\text{m}.$$

Results:

$$q = 66.7 \text{ N/m}, \qquad \tau = 44.4 \text{ kPa},$$

$$J = 5.34 \times 10^{-8} \text{ m}^4, \qquad \theta' = 1.44 \times 10^{-4} \text{ rad/m}.$$

Over the chord, $\theta_c = 2.3 \times 10^{-5}$ rad ($1.3 \times 10^{-3\circ}$), confirming negligible torsional twist.

11 Business & Regulatory Feasibility

11.1 Energy Storage and Propulsion Economy

One of the primary technical-economic constraints for electrically powered or hybrid-electric short take-off and landing (STOL) aircraft is the specific energy of the battery system. A key quantitative metric measuring it, the battery's gravimetric energy density (in Wh/kg), remains significantly lower than that of liquid aviation fuel, resulting in a substantial mass penalty when used for aircraft propulsion [80]. According to a report by NASA [83], "battery pack gravimetric energy density is one of the most important, yet often misestimated, design parameters for sizing all-electric aircraft." For example, the study shows that doubling cell energy density does *not* necessarily yield double pack energy density due to structural, thermal, and system mass overheads.

A recent review by the Faraday Institution [81] states that for small regional aircraft, the pack level would need to exceed about 600 Wh/kg in many cases to become truly competitive. For illustration: if the aircraft has a total energy requirement E for take-off/climb/cruise of $E \approx P_{\text{avg}} \times t$, and battery energy density is e_b (Wh/kg), then battery mass $m_b \approx \frac{E}{e_b}$. With $e_b = 250$ Wh/kg (mid-current), the mass penalty becomes prohibitive.
To address this, Hybrid-electric propulsion stands out as a compelling strategy to mitigate the performance constraints imposed by the relatively low energy density of modern battery technology. This system achieves superior operational metrics by integrating a traditional combustion engine with electric propulsion. The resulting combination delivers crucial benefits, including significantly extended range, enhanced fuel efficiency, and a vital decrease in greenhouse gas emissions [85, 86]. The flexibility of these hybrid systems allow for the incorporation of smaller, lighter battery packs, as the conventional fuel source is readily available to provide supplementary power during demanding flight segments. This inherent design flexibility further enables the dynamic optimization of power distribution and energy management, which ultimately translates to better overall aircraft performance [87].

11.2 Certification and Regulatory Pathways

Any novel aircraft architecture, especially one incorporating distributed electric propulsion (DEP), high-lift blowing systems, and multi-element wing arrangements, faces extensive certification and regulatory hurdles. The Federal Aviation Administration (FAA) indicates that new type certification for aircraft involves demonstrating structural integrity, system safety, control systems, and loads analysis, among other aspects [88, 89]. In the Indian context, the Directorate General of Civil Aviation (DGCA) requires compliance with airworthiness standards and may apply special conditions for non-conventional configurations. A realistic project timeline must include multi-year certification phases which may absorb 30-50% of development cost and schedule.

11.3 Operating Cost and Economics

Operating cost per flight cycle is a key viability indicator for short-haul or STOL missions. According to the European Organisation for the Safety of Air Navigation (EUROCONTROL), typical direct operating costs (DOC) for regional aircraft are given as USD \$4–10 million / year for several types of aircraft [90, 91]. Analysis of regional aircraft profitability reveals that the Cost per Available Seat-Kilometer (CASK), a primary metric for Operating Expenditure (OPEX), can exceed US\$0.50 (or $\sim$ INR 45) for certain smaller regional operations.

This benchmark CASK value allows for a projection of the estimated total operating cost (C_{total}) for the proposed route. The total cost is determined by the CASK, the route distance (D), and the number of available seats (S):

$$\text{C}_{\text{total}} = \text{CASK} \times \text{D} \times \text{S} \tag{77}$$

Assuming a worst-case scenario CASK of INR $45 \cdot \text{km}^{-1}$ and an effective route distance (D) of $\sim$ 1200 km (based on the Gurgaon to Navi Mumbai example), we derive the total cost for an assumed 8-seat capacity:

$$\begin{aligned}
\text{C}_{\text{per seat}} &= \text{INR } 45 \cdot \text{km}^{-1} \times 1200 \text{ km} \\
&= \text{INR } 54,000 \text{ per available seat} \\
\text{C}_{\text{total}} &= \text{C}_{\text{per seat}} \times 8 \text{ seats} \\
&= \text{INR } 432,000 \text{ per flight}
\end{aligned}$$

This calculation yields a baseline operational cost of INR $432,000$ per flight, which serves as a critical parameter for subsequent financial viability assessments. For a novel STOL platform with frequent cycles, short turnaround times, and specialized airfield infrastructure, maintenance, landing-fee, and ground-handling costs will likely be higher than those of legacy aircraft. This means the aircraft must realize significant value (time savings, underserved markets) to offset elevated per-flight costs.

11.4 Business Route to Market

Given the technical and regulatory challenges, a phased business approach is advised:

Phase 1: Demonstrator or R&D aircraft: Develop a prototype under experimental category or restricted operations to validate high-lift, DEP, and blowing systems.

Phase 2: Niche operational service Target underserved routes (ex- remote islands, short hops:) where time savings justify premium cost.

Phase 3: Full commercial certification and network roll-out: Transition to certified type, partner with existing aerodrome operators, integrate logistics and maintenance support. This staged strategy balances technical risk, certification effort and market adoption. Infrastructure for charging, security screening, and passenger handling must match conventional airports; otherwise, the cost advantages narrow. Without these, the route economics may favour ground transport alternatives.

—

12 Acoustic and Vibration Technical Analysis

Frequent short-takeoff operations in near-urban or suburban airfields must contend with community noise, regulatory limits, and infrastructure requirements. For example, propeller tip-speed noise and jet-blowing noise may demand mitigation strategies (acoustic shielding, low-tip-speed propellers).

12.1 The Big Picture

We have three interacting noise & vibration sources:

1. **High-Speed Jets / Blown Slots (Coandă, Blown-Flap):** These sources generate energetic, broadband jet noise, characterized by sound energy spread across a wide range of frequencies, often resulting in a distinct rushing or hissing sound.

2. **Propellers (Distributed Electric Propulsion - DEP):** Noise from propellers contains two primary components- strong tonal content at blade-pass frequencies, which manifests as a prominent, pitched whirring or humming sound; and broadband loading noise, a more general whoosh sound covering a range of frequencies that varies with flight conditions.

3. **Multi-Element Wing Surfaces (Slats, Flaps, Trailing Edges - TE):** These surfaces contribute significantly to airframe noise:

   - Trailing-Edge Broadband Noise: Created by turbulent airflow eddies passing over the sharp trailing edge of the wing or flap, leading to pressure fluctuations.
   - Slat-Flap Interaction Noise: Results from air rushing through the narrow gaps between the main wing and the high-lift devices, creating complex turbulent flows that impact subsequent surfaces and generate intense noise.

12.2 Foundations of aerodynamic noise

Acoustic radiation from unsteady aerodynamic flows is commonly formulated using an *acoustic analogy.* Lighthill's acoustic analogy rearranges the compressible Navier–Stokes equations into an inhomogeneous wave equation with a source (Lighthill stress) term:

$$\frac{\partial^2 \rho'}{\partial t^2} - c_0^2 \nabla^2 \rho' \;=\; \frac{\partial^2 T_{ij}}{\partial x_i \partial x_j}, \tag{78}$$

where ρ' is acoustic density perturbation, c_0 is ambient speed of sound, and T_{ij} is Lighthill's tensor (leading term $\rho u_i u_j$). Lighthill's *eighth-power law* for jet noise magnitude derives from scaling the RHS in (78) and predicts acoustic power $W \propto \rho_0 L^2 U^8 / c_0^5$ under appropriate assumptions (compact turbulence region, low Mach). Use this when estimating jet/blowing noise orders of magnitude for Coandă slots or high-velocity bleed jets.[60, 61]

12.2.1 Practical comments

- Lighthill's scaling is **qualitative**: it gives the dominant velocity dependence and highlights why high jet speeds are acoustically expensive (power increases very rapidly with velocity). We can use it to justify energy/power tradeoffs for blown flaps. [60]

- For moving/rotating surfaces (propellers), the Ffowcs-Williams & Hawkings (FW-H) formulation is preferable as it accounts for moving surface loading and thickness noise. The FW-H integral provides a far-field pressure expression in terms of surface loading and volume sources. [62, 63]

12.3 FW–H acoustic integral (propeller tonal and loading noise)

For an observer at far field, the FW-H solution expresses acoustic pressure via integrals over the moving (propeller) surfaces and volume sources. In a compact form:

$$p'(\mathbf{x}, t) = \frac{\partial}{\partial t} \iint_S \frac{L(\mathbf{y}, t_r)}{4\pi R(1 - M_n)}\, dS \;+\; \text{(volume terms)}, \tag{79}$$

where $L(\mathbf{y}, t)$ denotes surface loading integrand (combining thickness and loading terms), t_r is retarded time and R geometric distance; M_n is local normal Mach number. The FW-H framework is the basis of most numerical propeller noise predictions (CFD→FW-H post-processing). [61, 62, 63]

12.3.1 Design Consequences

- Tip speed and blade loading directly increase tonal amplitude. Lower tip speed reduces tonal and broadband noise.
- We can use FW-H to compare tonal maps for candidate propeller geometries and phasing strategies.

12.4 Airfoil self-noise and trailing-edge models (Amiet / BPM)

Trailing-edge (TE) noise of lifting surfaces (airfoils, slats, flaps) is a dominant broadband mechanism for high-lift systems. Amiet's theory (1976) gives the far-field pressure spectral density $S_{pp}(\omega)$ as a function of the incident boundary-layer wall-pressure spectrum and a *transfer function* $G(\omega, k)$ that encodes scattering at the TE:

$$S_{pp}(\omega) \;=\; \int_{-\infty}^{\infty} \Phi_{pp}^{BL}(\omega, k)\, |G(\omega, k)|^2\, dk, \tag{80}$$

where Φ_{pp}^{BL} is the wall-pressure wavenumber spectrum of the turbulent boundary layer and k is spanwise wavenumber. Empirical/semi-empirical prediction schemes such as Brooks–Pope–Marcolini (BPM) decompose self-noise into components (laminar separation vortex noise, turbulent boundary layer–TE scattering, bluntness and shedding) and provide formulas for spectral levels and scaling with Reynolds number and chord [64, 65, 66].

12.4.1 Implications for multi-element wings and slats

- Multi-element systems introduce *slat–flap interaction noise* and scattering from slat wakes; the Amiet/BPM framework must be extended to include additional scattering surfaces and slot interaction terms. Recent review studies quantify slat/trailing-edge interaction as a significant source at landing configurations. [66]
- Additional slat/flap edges, gaps/slots, and the presence of blowing disrupt the boundary layer spectrum and add scattering/interaction noise. Blown jets also introduce local sources (jet mixing noise) in addition to TE scattering. Empirical/numerical studies (NASA/DLR) quantify how slot blowing increases broadband TE noise unless slot momentum is controlled [67, 68].
- For blown flaps, the slot jet modifies the boundary layer incident spectrum Φ_{pp}^{BL} and can introduce additional compact (jet) source terms. This typically increases broadband levels unless other mitigation (shielding, phasing) is applied. [67, 68]
- Since we have to use blowing effect, the minimization of U_j to the extent possible (carefully considering its tradeoff with the C_L output as well) and prefer broad, low-speed blowing (large slot area, lower velocity) rather than small fast jets.

12.5 Jet noise scaling and Coandă/blown-flap noise

For a jet or Coandă slot, use Lighthill scaling and semi-empirical jet noise models:

$$W_{\text{acoustic}} \;\propto\; \frac{\rho_0 L^2 U^8}{c_0^5}, \tag{81}$$

where U is the representative jet velocity and L the characteristic turbulent scale (slot thickness or nozzle diameter). Because the acoustic power scales strongly with U^8, blown-flap designs must trade lift gain (ΔC_L) against acoustic penalty W_{acoustic}. This implies several consequences for the blown-flap design [60, 61, 67, 68].

1. The Coandă slot needs jet momentum to raise C_L (via C_μ). But increasing U_j to raise C_μ quickly raises noise.

2. Therefore, we need to minimize the required jet velocity by increasing slot area appropriately, and/or using the propwash (using prop placement to supply momentum) rather than tiny, very-fast jets.

3. Use Lighthill scaling as a screening rule to show the acoustic cost of candidate U_j values.

12.6 Tonal components (propeller blade-pass tones) and coherence

Propeller tonal noise appears at blade-pass frequency $f_{BPF} = N_b\Omega/2\pi$ and its harmonics. Tonal amplitude depends on the loading (unsteady blade loading) and the coherence of sources around the annulus. Distributed propellers create multiple coherent tonal sources that can interfere constructively or destructively depending on relative phase and spacing. The phase-control technique (phasing blade azimuths) can be used to reduce perceived tonal levels by destructive interference; NASA demonstrated potential reductions using relative blade phasing and differential RPM control. [69, 70]

12.7 Integrated noise optimization levers (analytic summary)

From the equations above, the primary suggestions for noise optimization are:

1. **Lower jet/prop tip speeds** (reduces Lighthill U^8 dependence and tonal content). — increase diameter or blade count (reduces disk loading for same thrust).[60]

2. **Spatial separation and phasing:** designing prop spacing and intentional phase offsets to induce destructive interference of coherent tonal sources. Analytical design uses source phasing sums: for N equal monopoles at radius r, the far-field amplitude scales with the vector sum of phasors $\sum_j A_j e^{i(\omega t - kr_j)}$. NASA phase control work gives practical phase selections. [69]

3. **Shielding and installation effects:** using wing/fuselage surfaces to shield observers (careful trade: installation can increase scattered broadband). Use FW-H/retarded integrals to evaluate installation effect. [62, **?**]

4. **Boundary layer manipulation at TE:**reduce Φ_{pp}^{BL} via laminarization or passive flow control to reduce TE scattering (input to Amiet/BPM models). [64, 65]

5. **Blown-jet velocity minimization:** select slot geometry and blowing mass flow to minimize required jet velocity for target ΔC_L (C_μ optimization), because jet noise increases roughly with high power of U_j. [67]

12.8 Structural vibration and forced response

Aero-structural excitation from unsteady aerodynamic/propulsive sources produces forced vibration. The single-mode forced vibration ODE is:

$$m\ddot{x} + c\dot{x} + kx = F(t), \tag{82}$$

with natural frequency $\omega_n = \sqrt{k/m}$ and damping ratio $\zeta = c/(2m\omega_n)$. If the forcing contains harmonic content at frequency ω_f (e.g., blade passage harmonics), resonance amplification occurs when $\omega_f \approx \omega_n$. For a distributed propeller system, blade-pass harmonics and wake impingement produce periodic forcing components that must be checked against structural modal frequencies [71].

12.8.1 Design checks and metrics

- **Modal survey:** compute first several natural frequencies and mode shapes of the wing (beam + box spar model) and ensure major force harmonics (BPF and low-order harmonics) are not close to modal frequencies or that damping is adequate. Use $\omega_n = \sqrt{k/m}$ as baseline. [71]

- **Forced response amplitude estimate:** for harmonic forcing $F(t) = F_0 \sin(\omega_f t)$, steady-state amplitude X is

$$X(\omega_f) = \frac{F_0}{\sqrt{(k - m\omega_f^2)^2 + (c\omega_f)^2}}.$$

  Use this to compute stress cycles (for fatigue) and estimate whether vibration mitigation (tuned mass dampers, increased structural damping) is needed. [71]

12.9 Aeroelastic instabilities: flutter and whirl

Aeroelastic stability must be checked for wing + propeller systems. Classical flutter analysis uses Theodorsen's unsteady aerodynamic transfer function $C(k)$ (complex) where k is reduced frequency; the flutter condition arises when aerodynamic damping becomes negative and overcomes structural damping. Theodorsen's lift (per unit span) for small harmonic oscillations reads:

$$L(\omega) = \pi \rho U c \left[C(k)\, \hat{\alpha} + \text{noncirculatory terms} \right], \tag{83}$$

and the standard approach is to set up modal equations and solve for complex eigenvalues. For propeller-wing systems *whirl flutter* can occur due to gyroscopic coupling and unsteady propwash; recent studies show propeller installation can shift the flutter boundary and create new instability modes — thus include a simplified whirl-flutter check for your candidate layouts. [72, 73]

12.9.1 Practical procedure

1. Extract mass m, stiffness k and modal damping c of the wing box (1–3 modes).
2. Identify forcing spectrum peaks (from propellers and blown jets): blade pass freq f_{BPF}, harmonics, and broadband content.
3. Compute forced response and fatigue cycles; ensure fatigue life is acceptable (use Miner rule) or add mitigation.
4. Evaluate flutter margin using Theodorsen unsteady aerodynamics (compute eigenvalue stability for first torsion–bending pair). [72, 73]

12.10 Practical CFD / Experimental acoustics program (recommended tasks)

1. **2-D blown-slot CFD + acoustic analog**: compute ΔC_L vs C_μ and extract unsteady pressure histories at the slot and TE for use in Amiet or FW-H post-processing. (Use URANS / DES for unsteady slot dynamics) [67, 68]
2. **Actuator-disk CFD map + FW-H**: run actuator-disk parametric sweeps (spacing, axial offset, RPM) and post-process with FW-H integration to estimate tonal levels and directivity. Validate with a single MRF / sliding-mesh full rotor/wing case for the best candidate. [62, 63]
3. **BEMT + aeroacoustic semi-empirical**: for rapid trades use BEMT for blade loading and BPM / Amiet models for broadband TE noise estimates to screen configurations before expensive CFD. [65, 64]
4. **Phase control study**: evaluate phasing and differential RPM strategies (using analytical phasor sums and simple acoustic propagation) to estimate tonal cancellation potential; confirm with FW-H. [69]
5. **Modal & forced response experiment**: modal test (or FEM modal analysis) of wing box and single motor mount to check resonances near BPF harmonics and adapt stiffness/damping as required. [71]

References

[1] Abbott, I. H., & Von Doenhoff, A. E. (1959). *Theory of Wing Sections: Including a Summary of Airfoil Data*. Dover Publications.

[2] AIAA (1998). *Guide for the Verification and Validation of Computational Fluid Dynamics Simulations*. AIAA-G-077-1998.

[3] Anderson, J. D. (2017). *Fundamentals of Aerodynamics* (6th ed.). McGraw-Hill Education.

[4] Austin, T. M., & McGranahan, R. D. (2010). Design and Analysis of a STOL Aircraft for the SAE Aero Design Competition. *48th AIAA Aerospace Sciences Meeting Including the New Horizons Forum and Aerospace Exposition*.

[5] Bertin, J. J., & Smith, M. L. (2009). *Aerodynamics for Engineers* (5th ed.). Pearson.

[6] Chapra, S. C., & Canale, R. P. (2014). *Numerical Methods for Engineers* (7th ed.). McGraw-Hill Education.

[7] Deperrois, A., & G'Bala, L. (2009). *XFLR5 – Analysis of Airfoils, Wings and Planes Operating at Low Reynolds Numbers*. XFLR5 Documentation.

[8] Drela, M. (1989). XFOIL: An Analysis and Design System for Low Reynolds Number Airfoils. In *Low Reynolds Number Aerodynamics*. Springer-Verlag.

[9] Drela, M. (1995). *A User's Guide to MSES 2.1*. MIT Computational Aerospace Sciences Laboratory.

[10] Glauert, H. (1926). *The Elements of Aerofoil and Airscrew Theory*. Cambridge University Press.

[11] Hess, J. L., & Smith, A. M. O. (1967). Calculation of Potential Flow About Arbitrary Bodies. *Prog. Aerospace Sci.*, 8, 1–138.

[12] J. D. Anderson, Jr., *Fundamentals of Aerodynamics*, 6th Edition. McGraw-Hill Education. (Referenced as Anderson / Anderson2017 / Anderson1999 where appropriate.)

[13] J. D. Anderson, Jr., *Fundamentals of Aerodynamics*, 6th ed., McGraw-Hill, 2017.

[14] J. D. Anderson, *Aircraft Performance and Design*, McGraw-Hill, 1999.

[15] J. D. Anderson, *Fundamentals of Aerodynamics*, 6th Ed., McGraw Hill Education, 2016.

[16] J. D. Anderson, *Aircraft Performance and Design*, McGraw Hill Education, 2017.

[17] Roskam, J. (various). *Airplane Design* series. DARcorporation. (Referenced for lifting-line explanations and data.)

[18] J. Roskam, *Airplane Design, Part VI: Preliminary Calculation of Aerodynamic, Thrust, and Power Characteristics*, DARcorporation, 1990.

[19] J. Roskam, *Airplane Design, Part VI: Preliminary Calculation of Aerodynamic, Thrust, and Power Characteristics*, DARcorporation, 1990.

[20] J. Roskam, *Airplane Design Part VI: Preliminary Calculation of Aerodynamic, Thrust, and Power Characteristics*, DARcorporation, 1990.

[21] Spence, D. A., "The Lift Coefficient of a Thin Jet-Flapped Wing," *Proceedings of the Institution of Mechanical Engineers, Part G: Journal of Aerospace Engineering*, SAGE Publications, 1956. DOI: `https://journals.sagepub.com/doi/10.1177/09544100251342547`

[22] D. A. Spence, "The Lift on a Thin Aerofoil with a Jet-Augmented Flap," *The Aeronautical Quarterly*, Vol. 9, No. 3, pp. 287–299, 1958. Cambridge University Press. `https://www.cambridge.org/core/journals/aeronautical-quarterly/article/abs/lift-on-a-thin-aerofoil-with-a-jetaugmented-flap/B7B6FEC98CC1B83E706841FA5D950542`

[23] Author(s) Unknown, "Article from the *Proceedings of the Institution of Mechanical Engineers, Part G: Journal of Aerospace Engineering*," SAGE Publications, 2025. DOI: https://journals.sagepub.com/doi/10.1177/09544100251342547

[24] J. Wild, "A Brief Overview on Past Research on Coandă Assisted STOL Transport Aircraft," in *Fundamentals of High Lift for Future Civil Aircraft*, Notes on Numerical Fluid Mechanics and Multidisciplinary Design (NNFM), Vol. 145, pp. 21–43, Springer, Cham, 2021. https://link.springer.com/chapter/10.1007/978-3-030-52429-6_2

[25] Hoerner, S. F., *Fluid-Dynamic Lift and Drag*, 1965. (Classic reference for empirical behavior and finite-wing effects.)

[26] NASA Glenn Research Center. (2024). Induced Drag and Span Efficiency. NASA Aeronautics Learning Laboratory. https://www.grc.nasa.gov/www/k-12/airplane/induced.html

[27] NASA Glenn Research Center. (2024). Lift and Drag Basics. NASA Aeronautics Learning Laboratory. https://www.grc.nasa.gov/www/k-12/airplane/lifteq.html

[28] Hayashibara, A. (2023). Lecture Notes: Finite Wing Theory and Induced Drag. California Polytechnic State University.

[29] D. P. Raymer, *Aircraft Design: A Conceptual Approach*, 6th ed., AIAA Education Series, 2018.

[30] D. P. Raymer, *Aircraft Design: A Conceptual Approach*, AIAA Education Series, 2012.

[31] I. Kroo, *Aircraft Design: Synthesis and Analysis*, Stanford University Press, 2001.

[32] M. H. Sadraey, *Aircraft Design: A Systems Engineering Approach*, Wiley, 2012.

[33] J. Roskam, *Airplane Design Part VI: Preliminary Calculation of Aerodynamic, Thrust and Power Characteristics*, DARcorporation, 1989.

[34] B. Etkin and L. D. Reid, *Dynamics of Flight: Stability and Control*, 3rd Ed., Wiley, 1996.

[35] L. M. Nicolai and G. E. Carichner, *Fundamentals of Aircraft and Airship Design, Vol. I*, AIAA Education Series, 2010.

[36] Hess, J. L. (1974). The problem of three-dimensional lifting potential flow and its solution by means of a panel method. *Computer Methods in Applied Mechanics and Engineering*, 4(3), 283-319.

[37] Houghton, E. L., & Carpenter, P. W. (2016). *Aerodynamics for Engineering Students* (6th ed.). Butterworth-Heinemann.

[38] Jacobs, E. N., Ward, K. E., & Pinkerton, R. M. (1933). *The characteristics of 78 related airfoil sections from tests in the variable-density wind tunnel.* NACA Report No. 460.

[39] Katz, J., & Plotkin, A. (2001). *Low-Speed Aerodynamics* (2nd ed.). Cambridge University Press.

[40] Lissaman, P. B. S. (1983). Low-Reynolds-number airfoils. *Annual Review of Fluid Mechanics*, 15(1), 223-239.

[41] Lyon, C. A., Broeren, A. P., Giguère, P., & Selig, M. S. (1997). *Summary of Low-Speed Airfoil Data - Vol. 3.* SoarTech Publications.

[42] Menter, F. R. (1994). Two-equation eddy-viscosity turbulence models for engineering applications. *AIAA Journal*, 32(8), 1598-1605.

[43] Moran, J. (2003). *An Introduction to Theoretical and Computational Aerodynamics.* AIAA Education Series.

[44] Murthy, G. S. D. K. S. S. S. N. K., & M, A. (2018). Design and CFD Analysis of a High Lift Airfoil for STOL UAV. *International Journal of Engineering & Technology*, 7(3.12), 1018-1022.

[45] Phillips, W. H. (1943). *Theoretical Analysis of the Effects of Flap Type and Deflection on the Low-Speed Characteristics of a Tapered Wing*. NACA Wartime Report L-295.

[46] Prandtl, L. (1918). Tragflügeltheorie (Lifting-wing theory). *Göttinger Nachrichten, Math-Phys. Kl.*

[47] Rumsey, C. L., & Biedron, R. T. (2006). CFD validation for a high-lift configuration. *24th AIAA Applied Aerodynamics Conference*, AIAA Paper 2006-3190.

[48] Selig, M. S., Guglielmo, J. J., Broeren, A. P., & Giguère, P. (1995). *Summary of Low-Speed Airfoil Data - Vol. 1*. SoarTech Publications.

[49] [Citation for the S1223 experimental paper- Selig, M. S., et al. (1995). *Summary of Low-Speed Airfoil Data - Vol. 1*.]

[50] Shiau, N.-H., Chang, J.-H., & Wu, J.-M. (2007). Aerodynamic Performance of S1223 Airfoil for Small-Size Wind Turbine Blade. *Journal of Marine Science and Technology*, 15(3), 209-219.

[51] Smith, A. M. O. (1975). High-Lift Aerodynamics. *Journal of Aircraft*, 12(6), 501-530.

[52] UIUC Applied Aerodynamics Group. (2023). *UIUC Airfoil Coordinates Database*. University of Illinois at Urbana-Champaign. Accessed: [Date of access].

[53] Van Dam, C. P. (2002). The aerodynamic design of multi-element high-lift systems for transport airplanes. *Progress in Aerospace Sciences*, 38(2), 101-144.

[54] Wenzinger, C. J., & Harris, T. A. (1938). *Wind-Tunnel Investigation of an N.A.C.A. 23012 Airfoil with Various Flaps and Combinations*. NACA Report No. 664.

[55] H. Multhopp, *Methods for Calculating the Lift Distribution of Wings (Subsonic Lifting-Surface Theory)*, R. & M. No. 2884, 1950.

[56] D. Mangler & R. Spencer, "On the treatment of logarithmic singularities in lifting-surface integrals", 1952.

[57] L. Prandtl, *Theory of Lifting Surfaces*, NACA Report, 1918.

[58] J. Weissinger, *Lifting-Surface Theory in Subsonic Flow*, Z. Flugwiss., 1947.

[59] Ma, Y., He, D., Zhao, N. et al. "Aerodynamic forces calculation of propeller based on Multhopp's lifting surface method." *Aerosp. sci. technol.* (2022). `https://aia.springeropen.com/articles/10.1186/s42774-022-00111-3`

[60] M. J. Lighthill, "On sound generated aerodynamically I. General theory," *Proc. R. Soc. Lond. A*, vol. 211, pp. 564–587, 1952. `https://royalsocietypublishing.org/doi/10.1098/rspa.1952.0060`

[61] F. Farassat, "The Acoustic Analogy – A Powerful Tool in Aeroacoustics," NASA/TM-2004-212910, 2004. `https://ntrs.nasa.gov/api/citations/20040075530/downloads/20040075530.pdf`

[62] S. Ffowcs Williams and D. L. Hawkings, "Sound generation by turbulence and surfaces in arbitrary motion," *Philos. Trans. R. Soc. Lond. A*, 1969.

[63] S. Ianniello, "An overview on the use of the Ffowcs Williams–Hawkings equation in computational aeroacoustics," 2013. `https://upcommons.upc.edu/bitstreams/821d1cef-74bd-4ce6-b0ed-7583fd1492d9/download`

[64] R. K. Amiet, "Noise due to turbulent flow past a trailing edge," *J. Sound Vib.*, vol. 47, 1976. `https://www.sciencedirect.com/science/article/pii/0022460X76909482`

[65] T. F. Brooks, D. S. Pope and M. E. Marcolini, "Airfoil self-noise and prediction," NASA RP-1218, 1989. `https://ntrs.nasa.gov/api/citations/19890016302/downloads/19890016302.pdf`

[66] M. S. Howe, "A review of the theory of trailing-edge noise," NASA CR-1978, 1978. `https://ntrs.nasa.gov/api/citations/19780018938/downloads/19780018938.pdf`

[67] N. N. Reddy, "Blown Flap Noise Prediction," NASA Contractor Report, 1978. https://ntrs.nasa.gov/api/citations/19790008477/downloads/19790008477.pdf

[68] H. Martin, "Blown Flap Noise," MIT Report FTL_R_1972_05, 1972. https://dspace.mit.edu/bitstream/handle/1721.1/68038/FTL_R_1972_05.pdf

[69] K. A. Pascioni, S. A. Rizzi and N. H. Schiller, "Noise Reduction Potential of Phase Control for Distributed Propulsion Vehicles," NASA TM-2019-xxxx, 2019. https://ntrs.nasa.gov/api/citations/20200002397/downloads/20200002397.pdf

[70] S. A. Rizzi et al., "Annoyance to Noise Produced by a Distributed Electric Propulsion High-Lift System," AIAA Sci. Tech. Forum, 2017. https://ntrs.nasa.gov/api/citations/20170005762/downloads/20170005762.pdf

[71] L. Meirovitch, *Fundamentals of Vibrations*, McGraw-Hill, 2001. (modal formulas, forced vibration responses)

[72] T. Theodorsen, "General theory of aerodynamic instability and the mechanism of flutter," NACA Rep. 496, 1935. https://ntrs.nasa.gov/api/citations/19930090935/downloads/19930090935.pdf

[73] Z. Wang, "Aeroelastic Modelling and Analyses of a Short Wing-Propeller System," Univ. Nottingham thesis, 2021–2024; discusses whirl Flutter and Theodorsen applications. https://eprints.nottingham.ac.uk/65737/1/Wang%2C%20Zi_14262686_Final_Thesis.pdf

[74] Lab 10 Lecture Notes. (n.d.). Wing bending calculations. https://ocw.mit.edu/courses/16-01-unified-engineering-i-ii-iii-iv-fall-2005-spring-2006/c5f687b07f1a376a5c785aab490c06ef_spl10.pdf

[75] Unknown. (n.d.). Area and bending inertia of airfoil sections. https://ocw.mit.edu/courses/16-01-unified-engineering-i-ii-iii-iv-fall-2005-spring-2006/21cb09c67195d8b306de55214c2b2f87_spl10b.pdf

[76] T. H. G. Megson, *Aircraft Structures for Engineering Students*, 7th ed., Butterworth–Heinemann, 2021.

[77] Olson, E. D., NASA Langley Research Center, Henricks, Q., & The Ohio State University. (2021). Parametric analysis of aircraft wing weight using Low-Order Physics-Based analysis. In NASA Langley Research Center, Hampton, VA 23681. https://ntrs.nasa.gov/api/citations/20190027204/downloads/20190027204.pdf

[78] Patterson, R. W. (1974, May 1). Weight estimates for Quiet/STOL aircraft. NASA Technical Reports Server (NTRS). https://ntrs.nasa.gov/citations/19740057126

[79] M. C. Y. Niu, *Airframe Structural Design*, Conmilit Press, 1999.

[80] Adams, E. (2017, May 31). Electric Airplanes Need Better Batteries—Which should arrive in 30 years. WIRED. https://www.wired.com/2017/05/electric-airplanes-2/

[81] Gifford, S. & Faraday Institution. (2024). Powering the skies: the rise of electric and Low-Carbon aircraft. In Faraday Insights - Issue 19: April 2024. https://www.faraday.ac.uk/wp-content/uploads/2024/04/Faraday_Insights_19_FINAL.pdf

[82] M. J. Groom et al., "Numerical Investigation of Propeller–Wing Interaction Noise," AIAA Aviation 2025 paper, 2025. https://ntrs.nasa.gov/api/citations/20250006169/downloads/AIAA_AVIATION_2025_paper-5.pdf

[83] I. N. PackAuthor, "Battery Cell-to-Pack Scaling Trends for Electric Aircraft," NASA, 2021. Available online: https://ntrs.nasa.gov/api/citations/20210017488/downloads/Battery_Cell_to_Pack_Scaling_Trends_for_Electric_Aircraft_6_14.pdf

[84] Faraday Institution, "Powering the Skies: The Rise of Electric and Low-Carbon Aircraft," 2024. Available online: https://www.faraday.ac.uk/wp-content/uploads/2024/04/Faraday_Insights_19_FINAL.pdf

[85] Cai, Y., Xie, J., Pastra, C. L., Ndifor, N. R., Kehler, A. M., & Mavris, D. (2024). Parametric Mission Performance Assessment of Regional Turboprop Aircraft Retrofitted With Hybrid Electric Propulsion. AIAA. https://doi.org/10.2514/6.2024-4038

[86] Pattanayak, T., Uzodinma, J., Gautier, R. H., Walter, M., Zaidi, T., & Mavris, D. (2024). Uncertainty Analysis of Turbofan and Turboprop Architectures for Hybrid Electric Propulsion in NASA EPFD Vehicles. AIAA. https://doi.org/10.2514/6.2024-3826

[87] Gautier, R. H., Teta, L., Uzodinma, J., Pattanayak, T., Walter, M., Zaidi, T., & Mavris, D. N. (2023). Impact of technological uncertainty on design parameter selection of the NASA Parallel Hybrid-Electric Propulsion EPFD vehicle. AIAA. https://doi.org/10.2514/6.2023-4501

[88] Aircraft certification. (n.d.). Federal Aviation Administration. https://www.faa.gov/aircraft/air_cert

[89] How does the FAA certify aircraft? (n.d.). Federal Aviation Administration. https://www.faa.gov/aircraft/air_cert/airworthiness_certification

[90] EUROCONTROL, "Standard Inputs for Economic Analyses," Edition 10, 2024. Available online: `https://www.eurocontrol.int/sites/default/files/2024-05/eurocontrol-standard-inputs-economic-analyses-ed-10.pdf`

[91] EUROCONTROL, "Aircraft Operating Costs and Profitability," 2022. Available online: `https://www.eurocontrol.int/sites/default/files/publication/files/standard-input-for-eurocontrol-cost-benefit-analyses-2018-edition-8-version-2.6.pdf`

[92] International Council on Clean Transportation (ICCT), "Performance Analysis of Regional Electric Aircraft," July 2022. Available: `https://theicct.org/wp-content/uploads/2022/07/global-aviation-performance-analysis-regional-electric-aircraft-jul22-1.pdf-1.pdf`

[93] M. Author, "Comparative Analysis on Aircraft Direct Operating Cost Models," SSRN Working Paper, 2025. Available: `https://www.researchgate.net/publication/393766877_Comparative_Analysis_on_Aircraft_Direct_Operating_Cost_Models`

[94] P. Smears, "What energy density is required for the batteries in order to make an all-electric aircraft real?," Aviation StackExchange, 2017. Available: `https://aviation.stackexchange.com/questions/45040/what-energy-density-is-required-for-the-batteries-in-order-to-make-an-all-electr`