Team 37

End-Term
Presentation

Multi-wing, blown-flap system leveraging the Coanda effect and Distributed Electric Propulsion (DEP) for high-lift STOL operation

Agenda

03 Approach

04 Aero - 2D

08 Aero - 3D

09 Propulsion - Thrust

11 Propulsion - Blown Effect (EDF)

13 Aero-Prop Integration

14 Structural Analysis

16 Acoustics and Vibration analysis

17 Control system responses

18 Business model architecture

20 Futuristic Tech comparision

21 Agenda

Approach

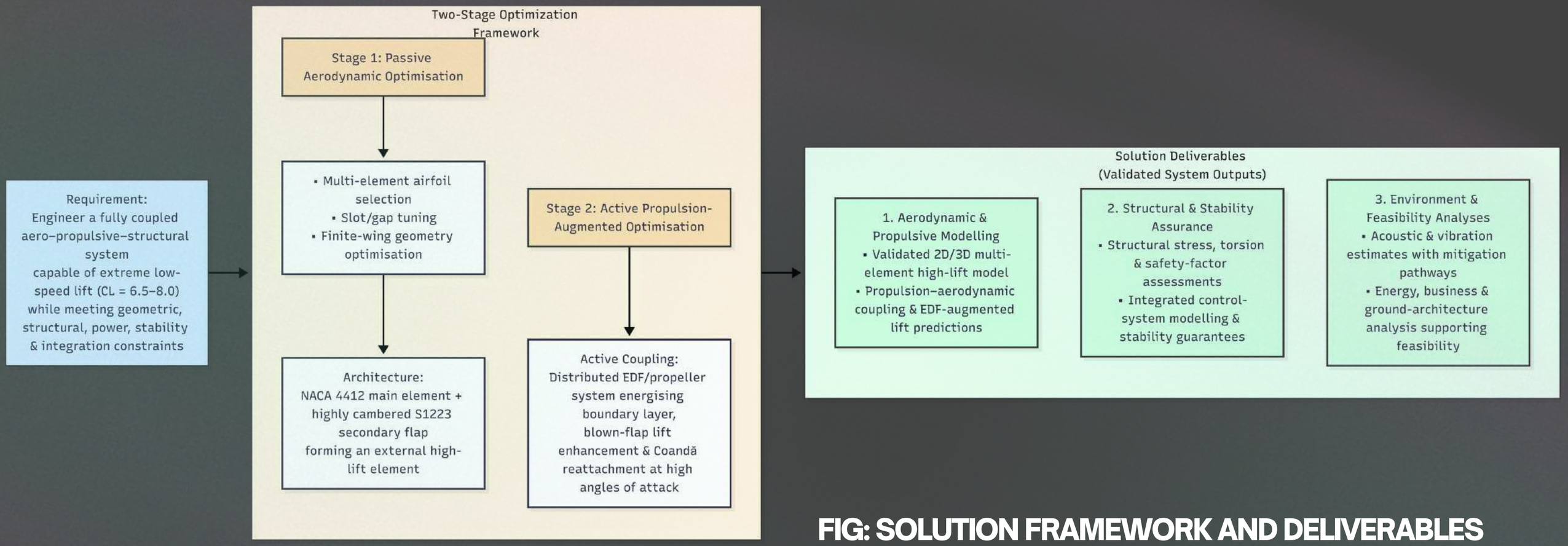

FIG: SOLUTION FRAMEWORK AND DELIVERABLES

Aero - 2D

The lifting system consists of two separate full-span wings arranged as a multi-element system:

Primary wing: NACA 4412, full span.
Secondary wing: S1223, full span, placed downstream below the primary wing.

We answer:

- Why did we take these airfoils in particular?
- Configuration of these airfoils, explained:
- Optimization methodologies used

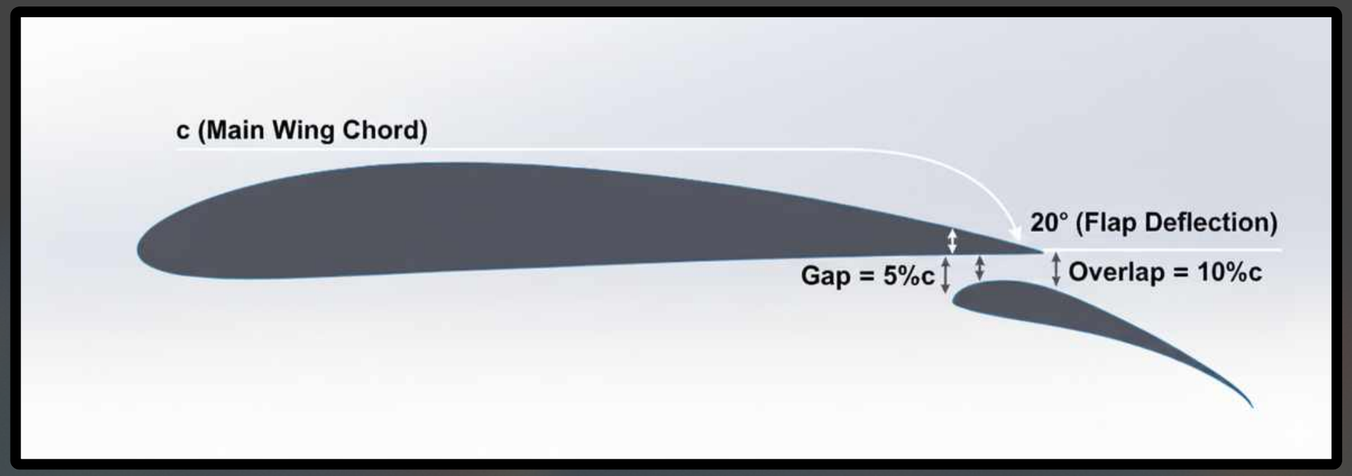

FIG: 2D AIRFOIL GEOMETRY

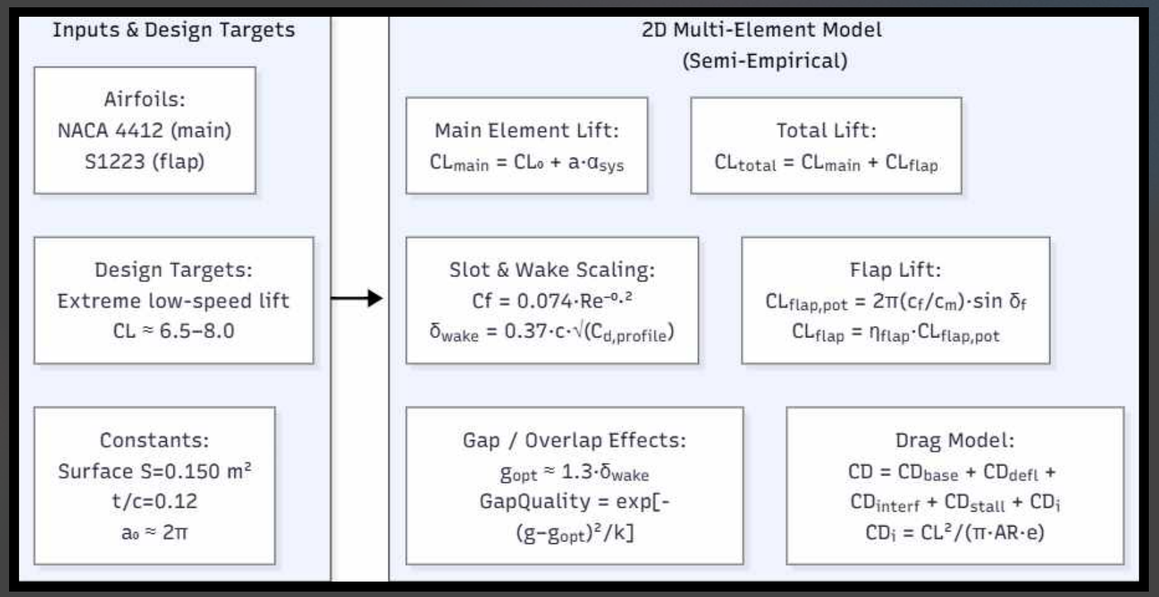

FIG: WING SHAPE OPTIMIZATION ARCHITECTURE PART 1

Aero - 2D

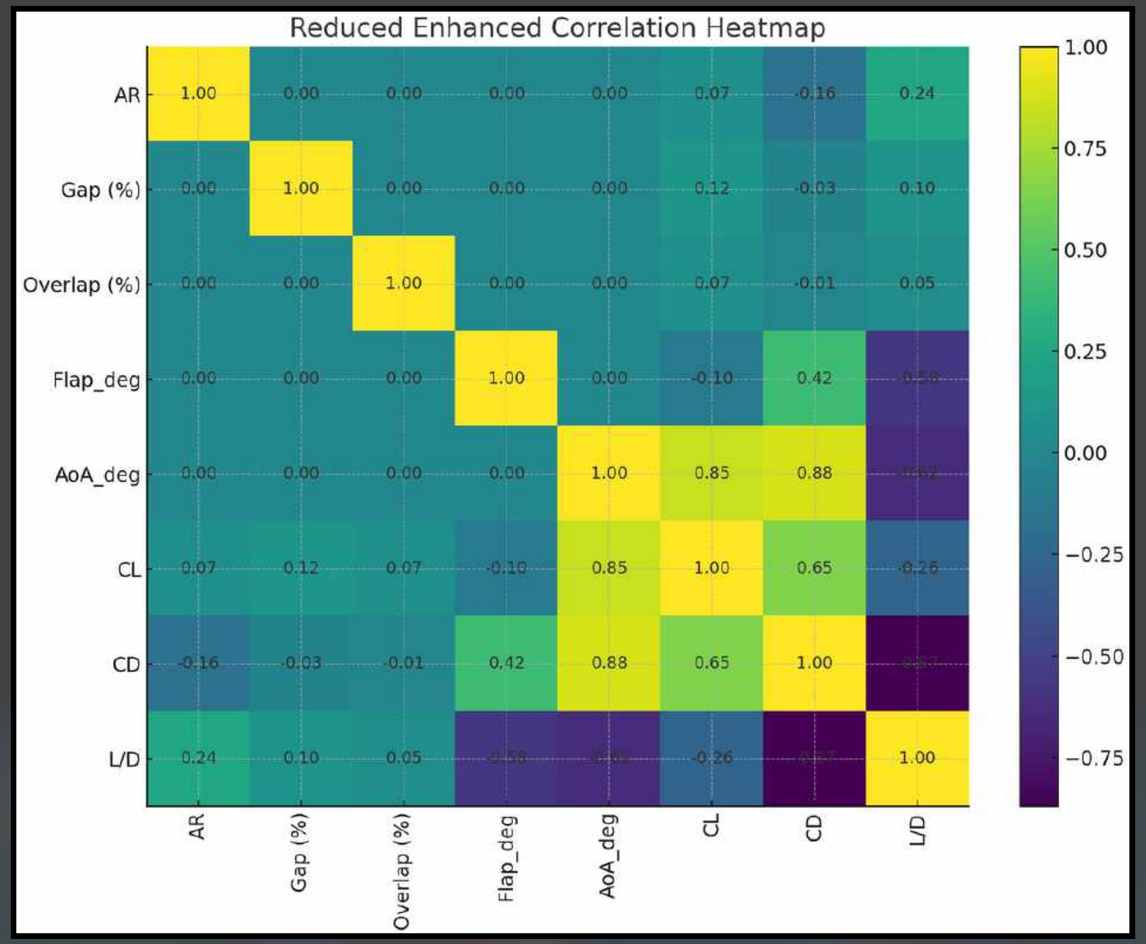

FIG: CORELATION MAP

FIG: WING 2D SHAPE OPTIMIZATION ARCHITECTURE PART 2

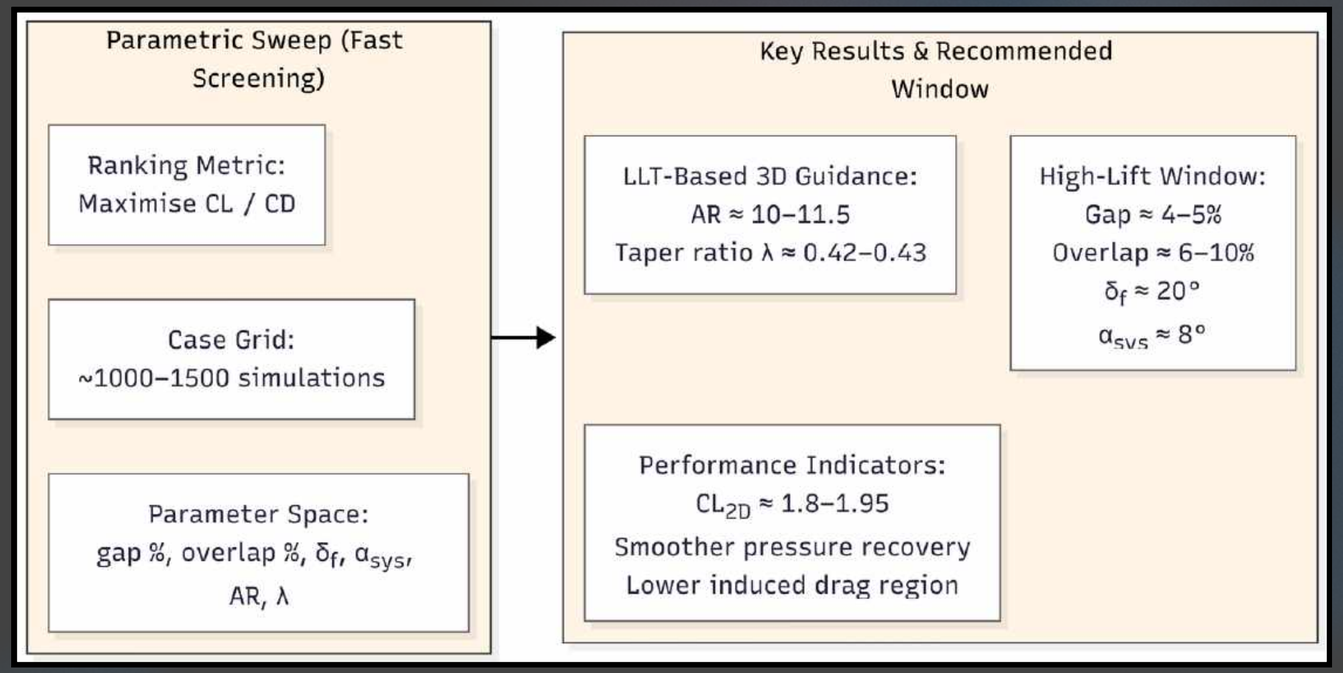

Aero – 2D | Key Overview

- Strongest influencers: AoA, flap deflection, gap %, overlap %
- Sweep: 1000–1500 sims, ranked by CL/CD
- Recommended window: Gap 4–5%, Overlap 6–10%, δf 20°, α_{sys} ~8°
- LLT guidance: AR 10–11,5, λ 0,42–0.43

Aero - 2D

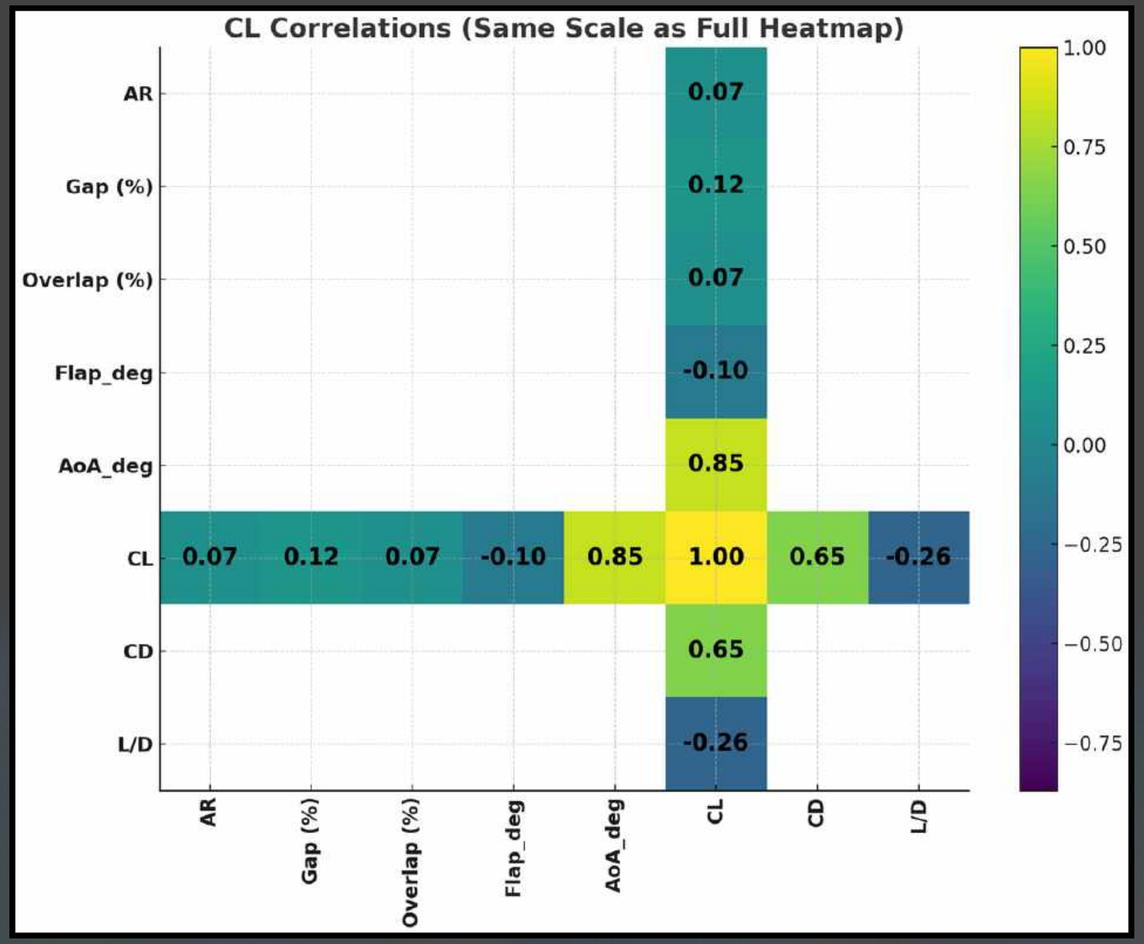

FIG: CORELATION MAP

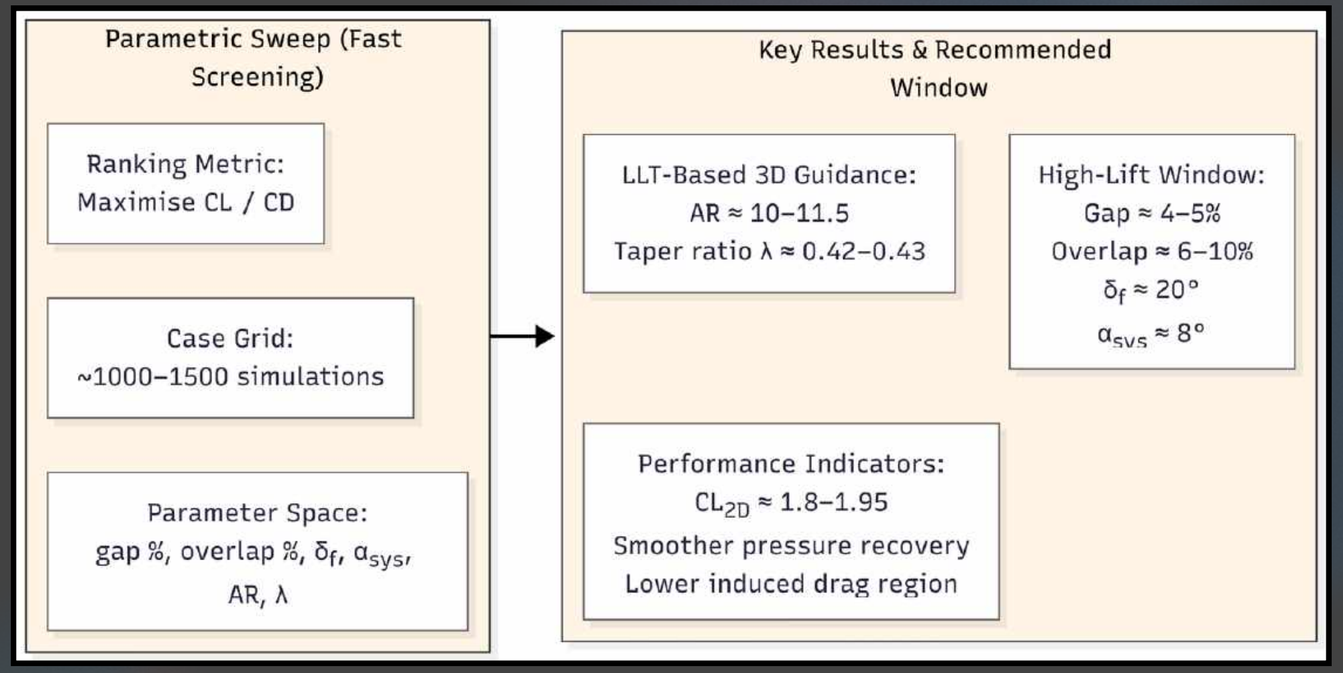

FIG: WING 2D SHAPE OPTIMIZATION ARCHITECTURE PART 2

Chosen configuration:

- **Flap Chord Ratio:** 35% of the main element's chord
- **Vertical Offset:** 5%
- **Overlap:** 10%

Aero - 3D

AR	C_L	C_D	L/D	$C_{D,i}$	$C_{L,\text{main}}$
10.5	2.4169	0.33048	7.313	0.21596	1.4679
11.0	2.4262	0.32224	7.529	0.20772	1.4771
11.5	2.4347	0.31462	**7.739**	0.20010	1.4857

FIG: COMPARING VARIOUS DELIVERABLES FOR DIFFERENT ASPECT RATIOS

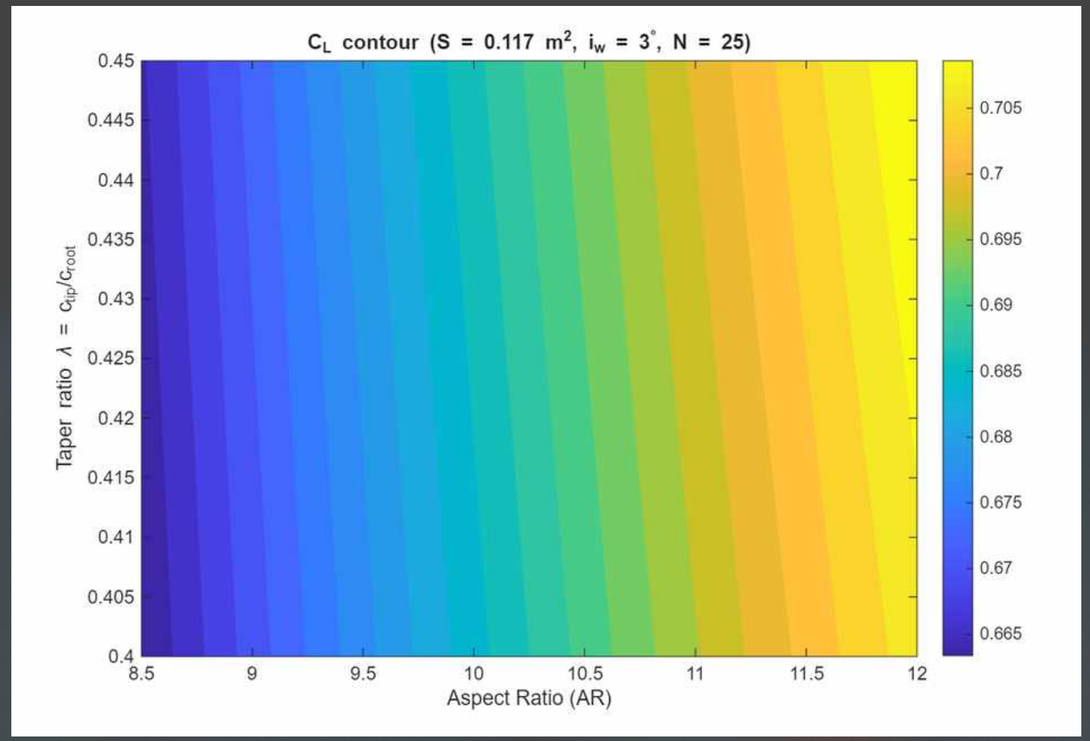

FIG: AR- TAPER-CL COLOUR MAP

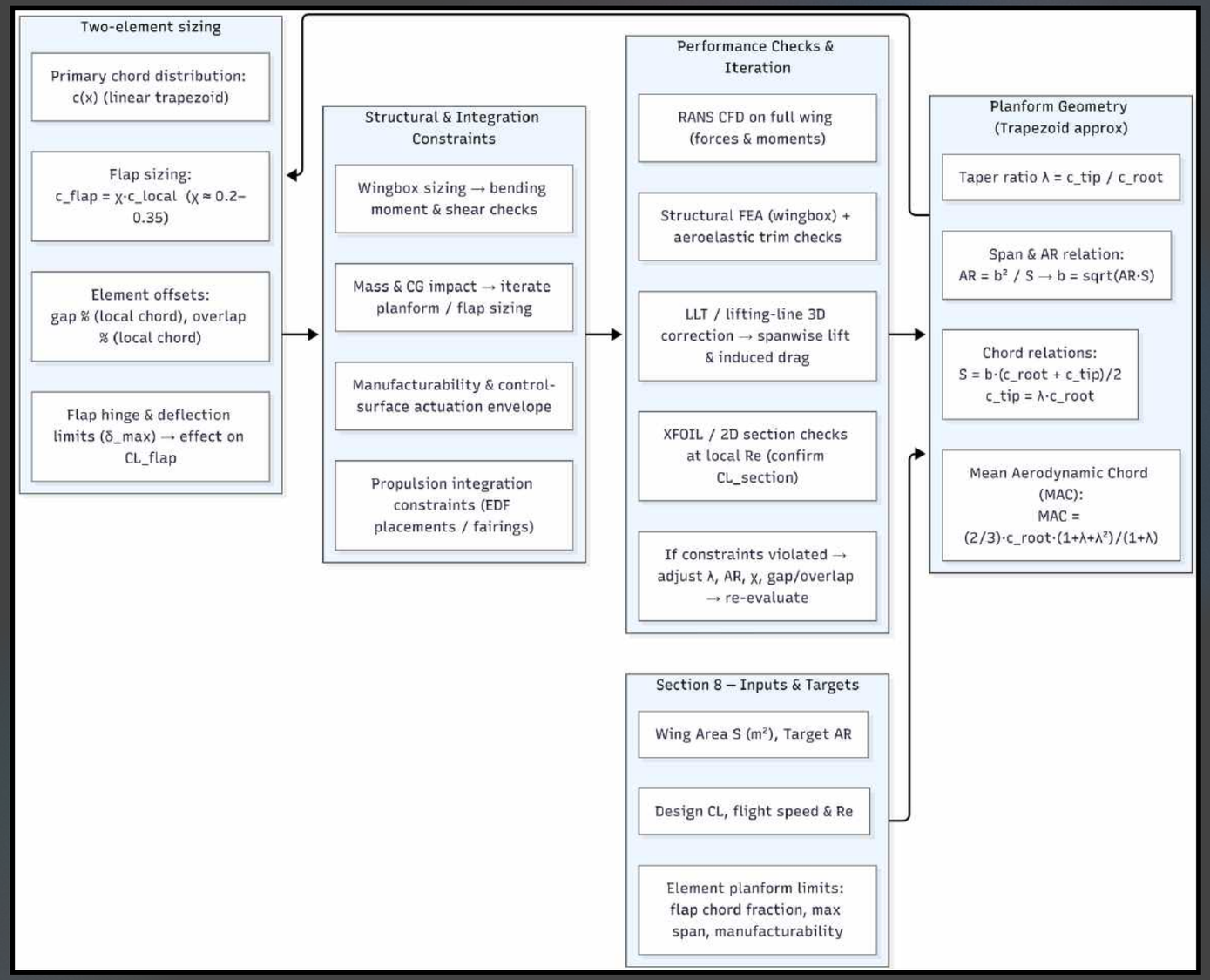

FIG: WING 3D SHAPE OPTIMIZATION ARCHITECTURE

Aero - 3D

Fig: Top view of the wing (not to scale)

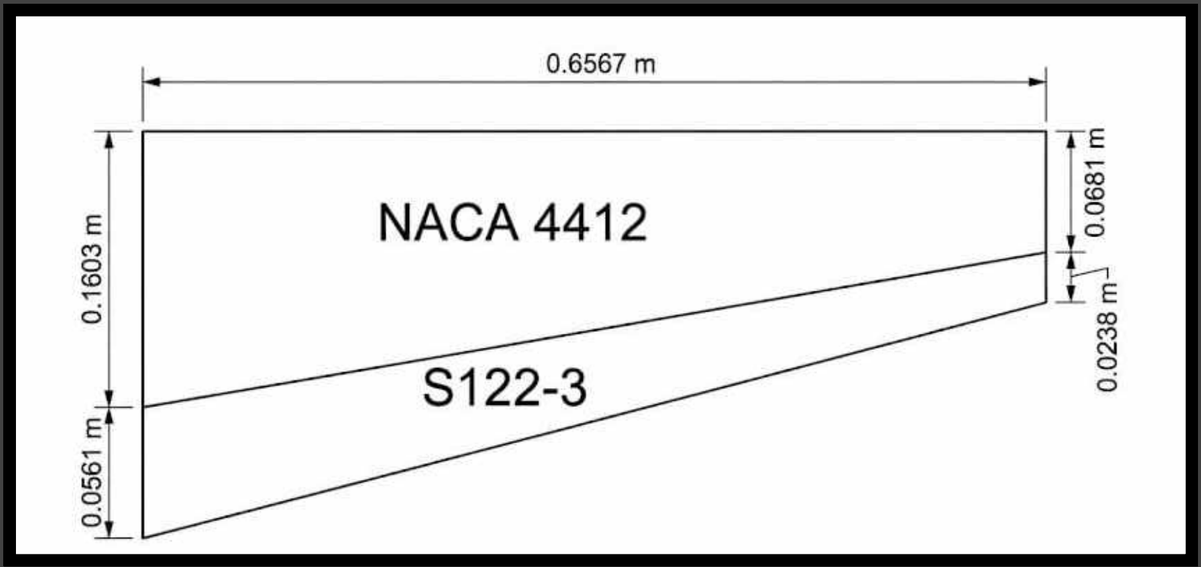

Parameter	Value	Reasoning
Aspect Ratio (AR)	11,50	High efficiency
Planform Area (S)	0,150 m^2	Size of the wing
Taper Ratio (λ)	0,425	Wing shape
Wingspan (b)	1,3134 m	Total width
Root Chord (C_r)	0,1603 m	Chord near the fuse-
Tip Chord (C_t)	0,0681 m	Chord at the wingtip
Flap Root Chord ($C_{f,r}$)	0,0561 m	Flap dimension near the root
Flap Tip Chord ($C_{f,t}$)	0,0238 m	Flap dimension at the tip
Mean Aerodynamic Chord (MAG)	0,1202 m	Average chord length
Slot Gap (g)	8 mm	Space between slot and wing
Slot Overlap (o)	16 mm	Overlap of slot and
Sweep Angle (λ)	≈ 0°	Wing angle backward
Dihedral Angle (Γ)	1°–2°	Wing tilt upward
Wing Placement	High-wing configuration	Wing position relative to fuselage

- **Dihedral (1–2°): Adds roll stability.**
- **High-wing: Naturally stable, good lift, safe ground clearance.**
- **Zero sweep: Minimum drag + max lift at low speeds.**
- **High AR (~11.5): Boosts lift-to-drag, ideal for efficient cruise.**
- **Taper ($\lambda \approx 0.42$): Reduces tip losses, smooth lift distribution, lighter structure.**

Parameter	Value
Blades	4
Propeller Diameter (D)	0.200 m
Cruise RPM	10,000
Cruise Drag (N)	0.30
Cruise Power (W)	331
Cruise Efficiency (%)	89.69%
Takeoff RPM	10,318
Takeoff Drag (N)	25.21
Takeoff Power (W)	1244.1
Takeoff Efficiency (%)	59.48%
Pitch Shift (°)	-22.84

Propeller Design Parameters

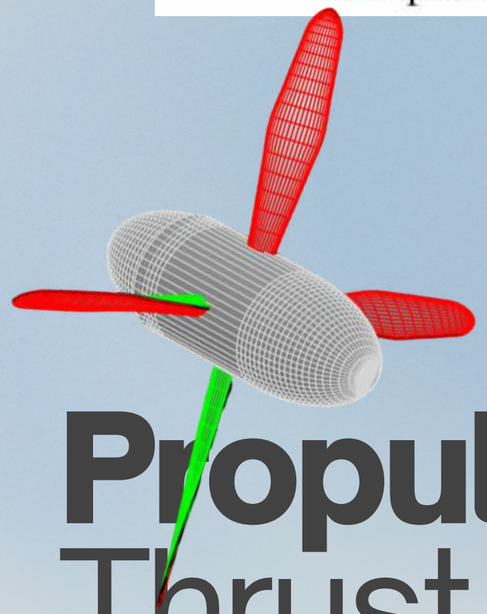

Propulsion-
Thrust

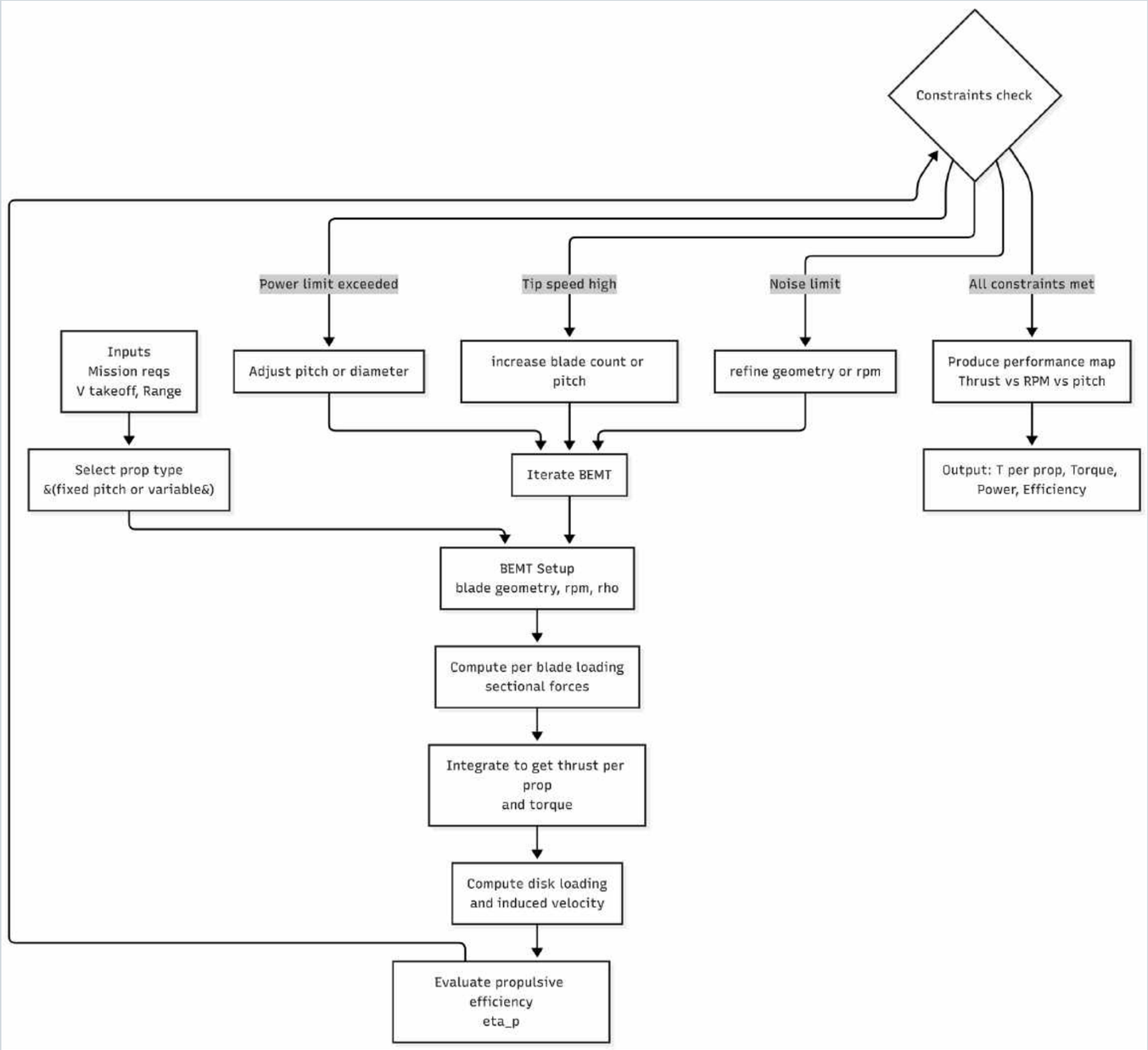

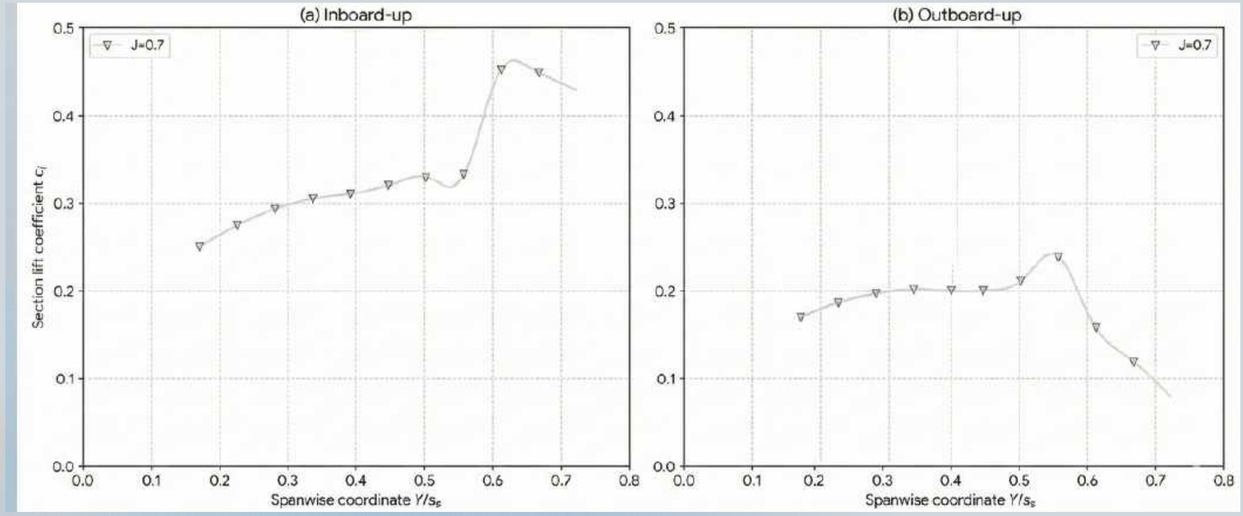

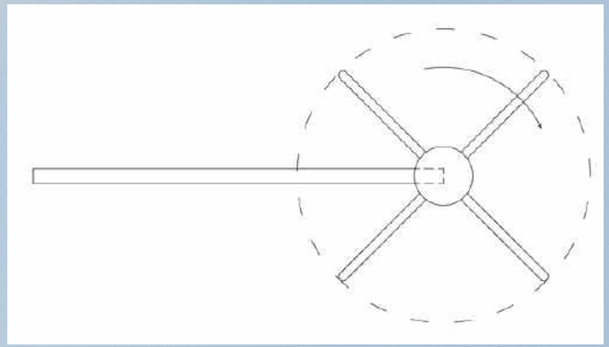

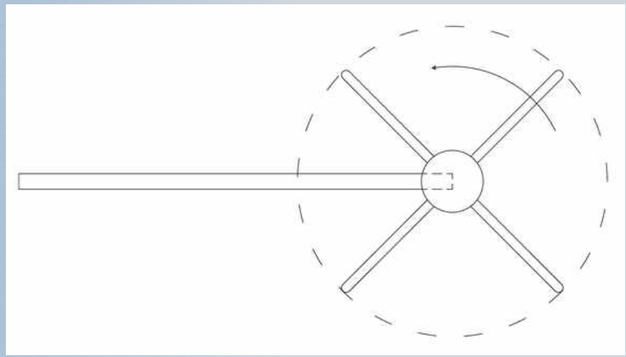

Spanwise-Sectional Lift Coefficient Inboard-up vs Outboard-up

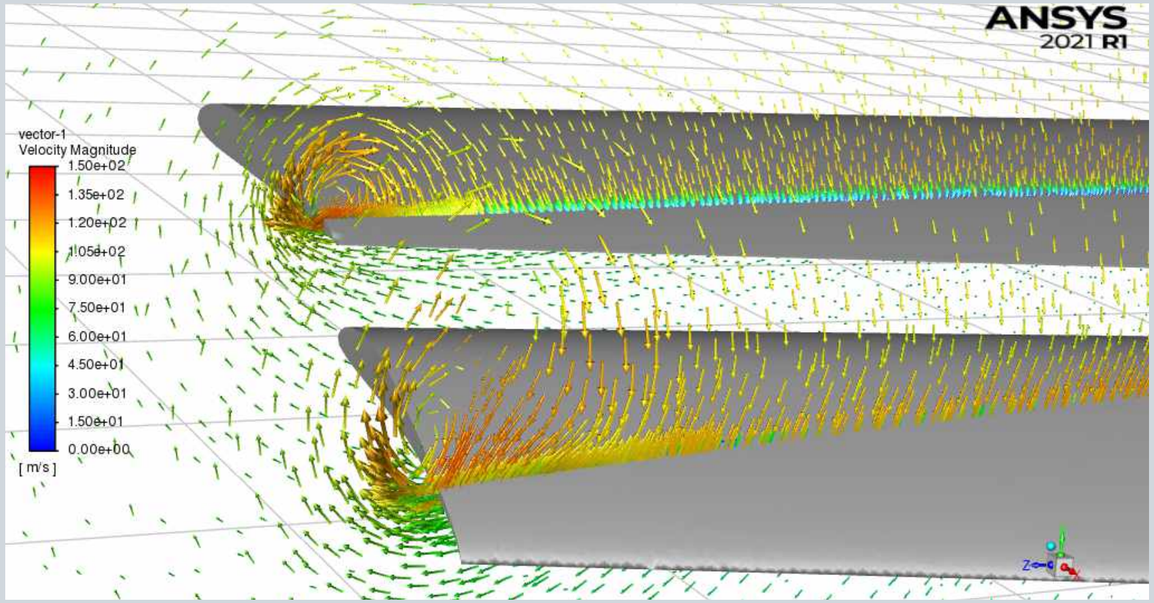

Velocity Vector Showing Wing Tip Vortices near the trailing edges of selected airfoil configuration

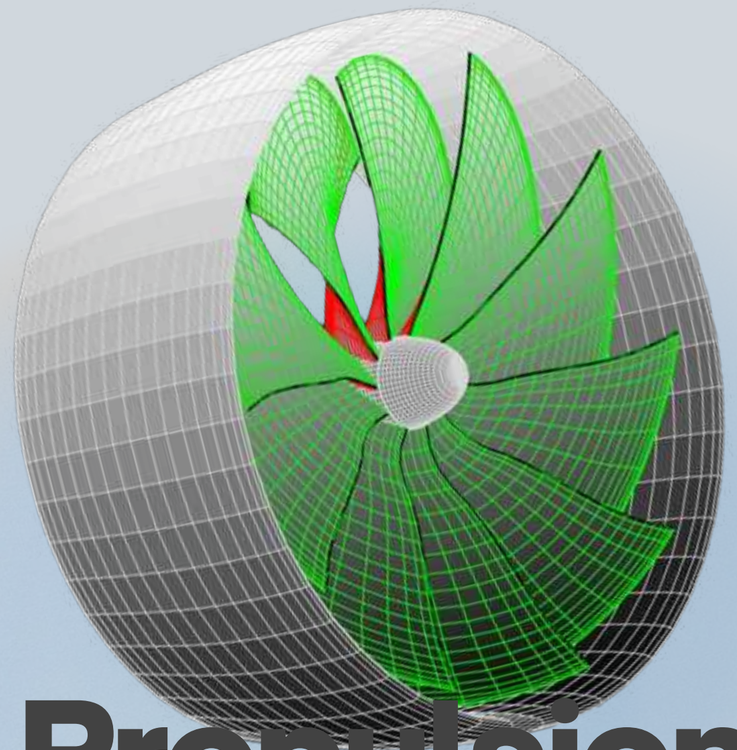

Propulsion- Blown Effect (EDF)

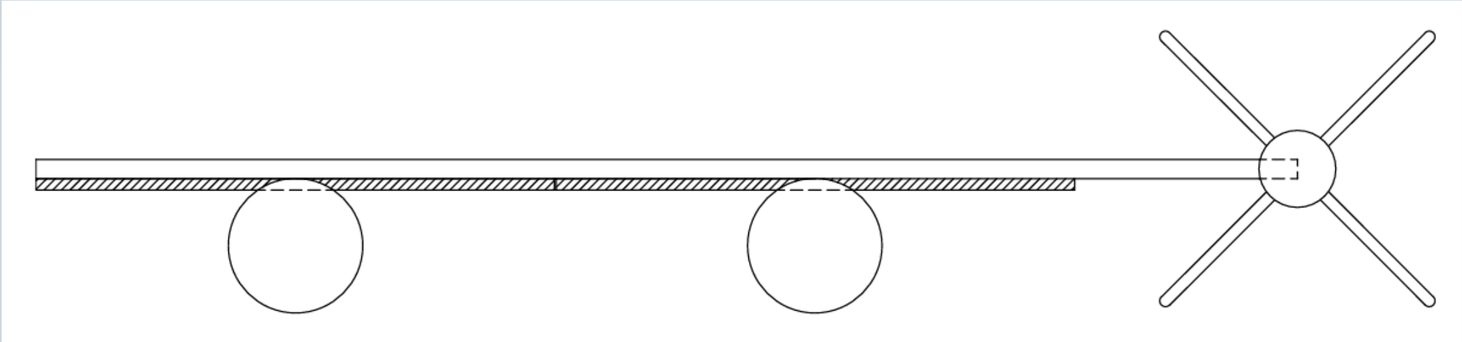

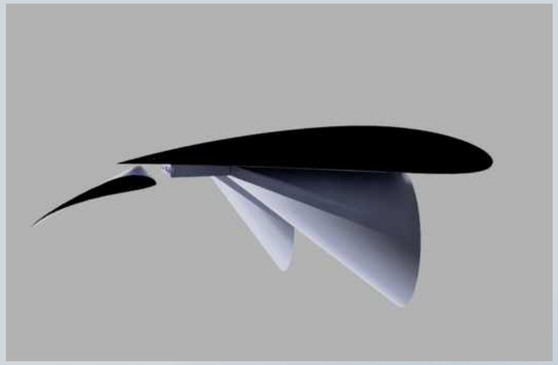

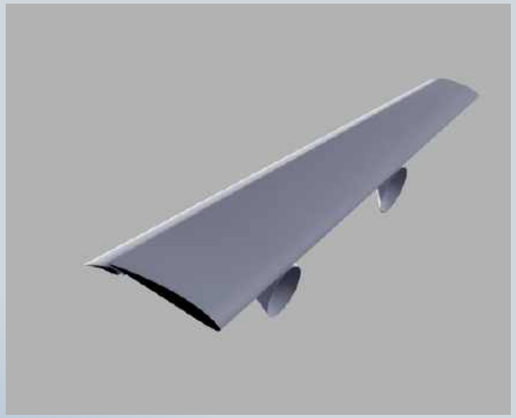

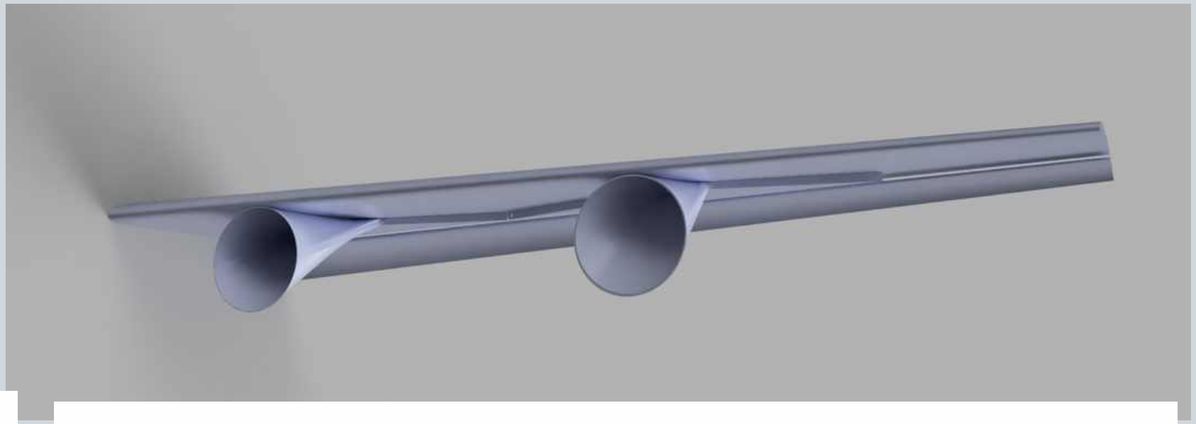

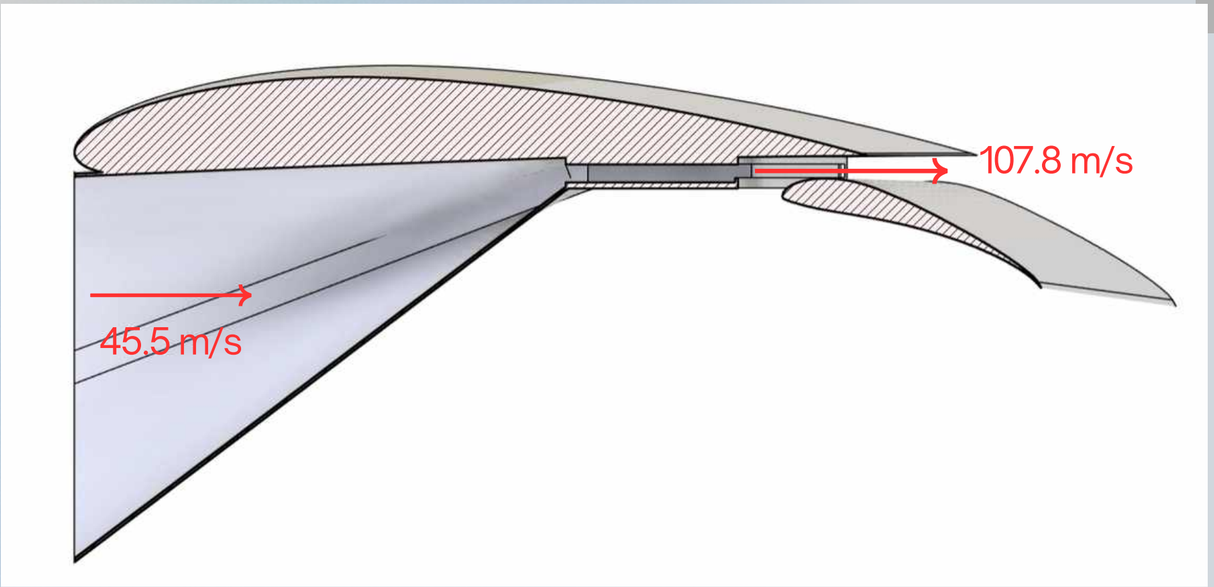
107.8 m/s
45.5 m/s

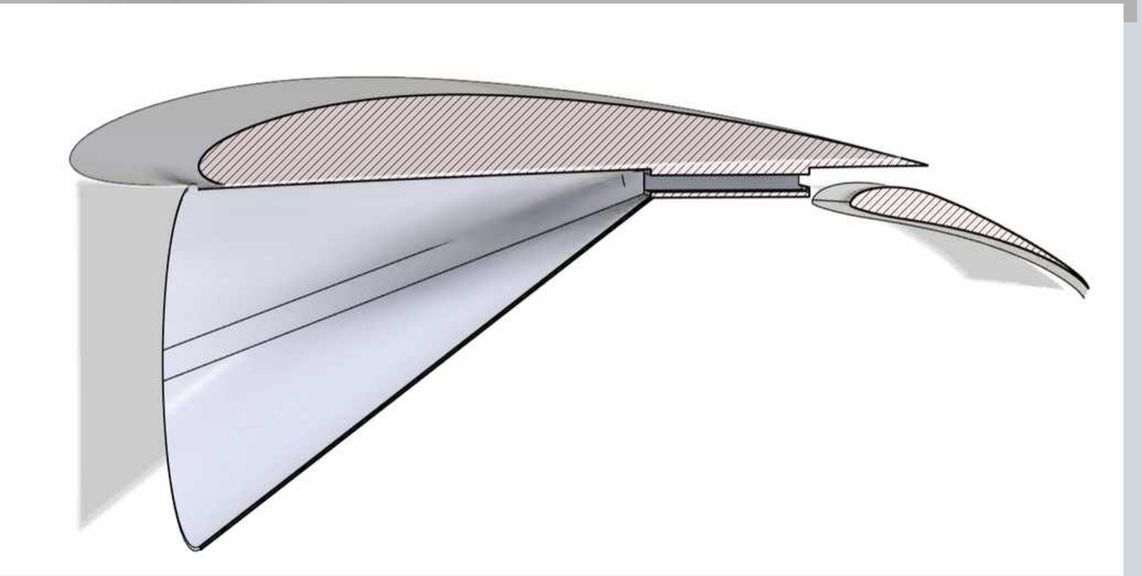

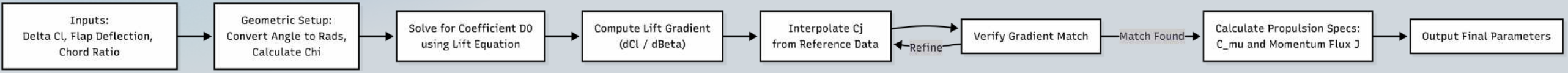
Inputs:
Delta Cl, Flap Deflection,
Chord Ratio
Geometric Setup:
Convert Angle to Rads,
Calculate Chi
Solve for Coefficient D0
using Lift Equation
Compute Lift Gradient
(dCl / dBeta)
Interpolate Cj
from Reference Data
Refine
Verify Gradient Match
Match Found
Calculate Propulsion Specs:
C_mu and Momentum Flux J
Output Final Parameters

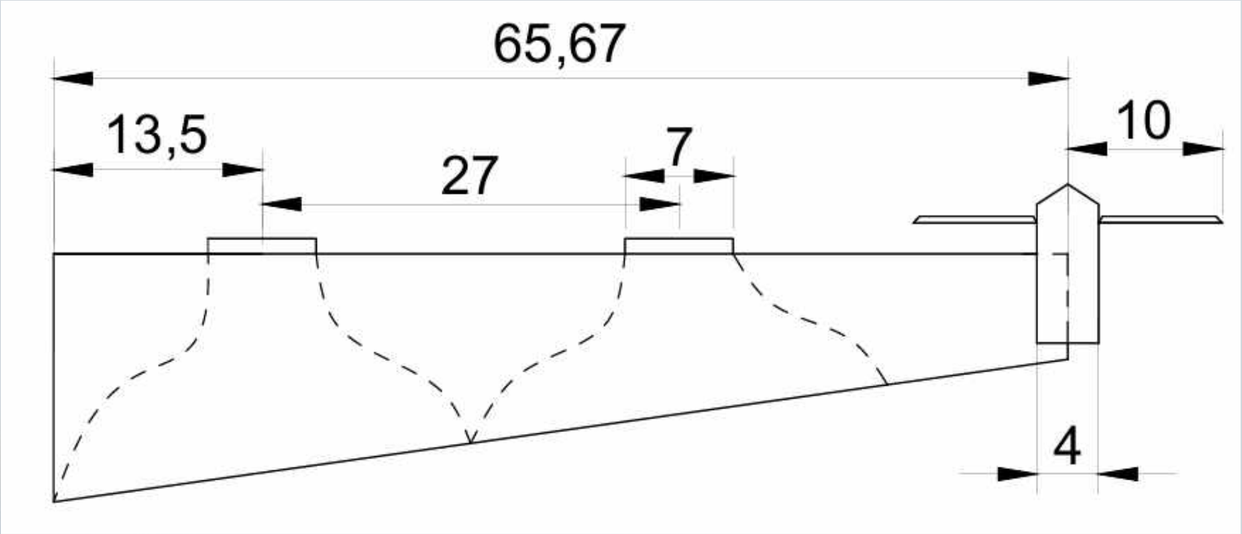

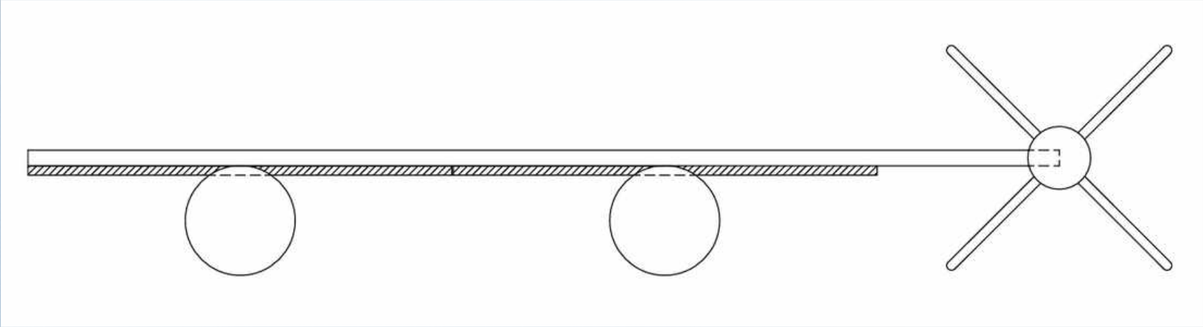

Aero-Prop Integration

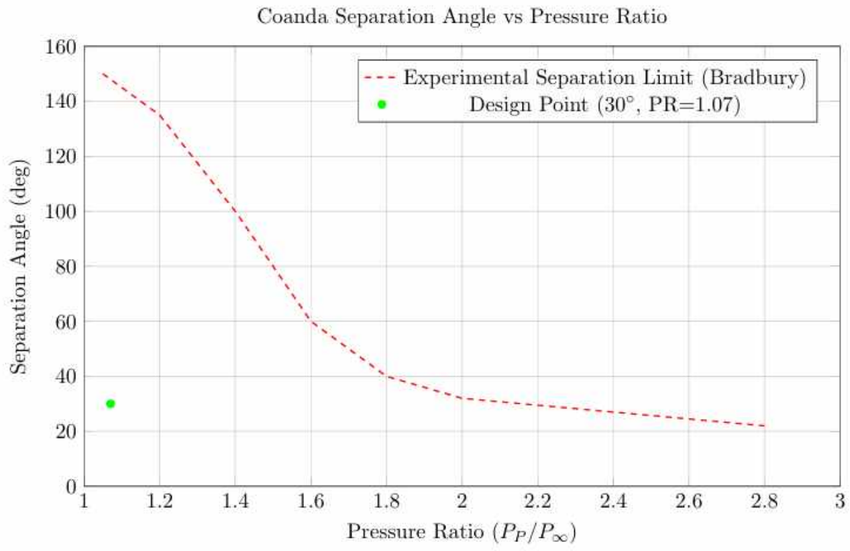

Figure 13: Design point safety margin relative to Coanda separation limits.

Structural Analysis

- **Lift calculation:** Start with wing lift at takeoff using $L = \frac{1}{2}, \rho V^2 S C_L$.
- (Ex- $\rho = 1.22, V = 20, m/s, S = 0.15, m^2, C_L = 6.5$

yields 'L' ≈ 237.9 N.)

- **Load distribution:** Assume a tapered semi-span; distribute this lift along the span to get bending load.
- **Root bending moment:** Integrate spanwise load to get root moment M_0 (closed-form for a linear chord taper).
- **Section properties:** Compute second moment of area 'I' for the chosen 12%-thick airfoil section $\approx 9.01 \times 10^{-8} m^4$ for our geometry).
- **Bending stress:** Extreme-fiber stress $\sigma_{\max} = M_0 z / I$ (with z = t/2).
- **Safety factor:** SF = $\dfrac{\sigma_{\text{allow}}}{\sigma_{\max}} - 1$

Use conservative $\sigma_{\text{allow}} \sim 250, MPa(steel)$ or 300 MPa (Al alloy).

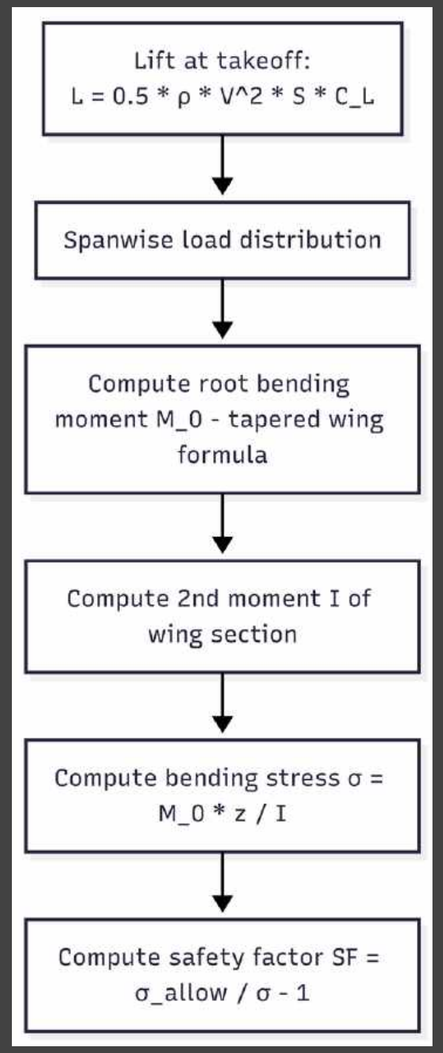

Structural Analysis

Key results and implications

- **Example values:** For $C_L=6.5$, $V=20m/s$, $S=0.15m^2$, we found $L \approx 237.9$ N (vs. fuselage weight ~147 N). The calculated root moment is $M_0 \approx 14.65$ N·m. With $I \approx 9.01 \times 10^{-8} m^4$ and $z=t/2$ (≈ 0.00949 m), the extreme stress is $\sigma \approx 1.54$ MPa.
- **Safety factor:** Using $\sigma_{allow}=250MPa$ (mild steel) yields $SF \approx 161$. (Even with 2024-T3 aluminum $\sigma_{allow} \approx 300MPa$, SF is on the order of 200.)

Interpretation?

- **Torsion:** A hand-estimate using Bredt–Batho (with a small torque $T=0.2N \cdot m$) gave twist $\theta \approx 2.7 \times 10^{-5}$ rad over the chord, i.e. negligible for trim. Shear stress was only $4.4 \times 10^4 Pa$.

Implications?

Acoustics and Vibration

Primary Noise Sources:

1. **Propeller Tonal Noise:** Blade-Passage Frequency (BPF) and harmonics.
2. **Jet/Blown-Slot Mixing Noise.**
3. **Trailing-Edge/Slat-Flap Noise.**

→

Key Scalings (Propeller Noise):

1. **Propeller Tone Amplitude (p)**

$$p \sim (\rho^2 U_{tip}^2 S_b)/(4\pi r)$$

Shows strong dependence on- U_{tip}^2

2. **Slipstream Noise Power (W):**

$$W \propto V_j^8$$

Our nominal $V_j \approx 44\ \mathrm{m/s}$, yielding a peak acoustic energy in the mid-kHz range (0.5-2KHz)

→

Mitigation Strategy:

- Use 4 small, high-RPM propellers.
- Target a low tip Mach number ~0.3

Regulatory Linkage:

- Planning an EPN dB certification-style study (Effective Perceived Noise).
- Compliance: Meeting ICAO (Annex 16) standards.
- Integrated Flow/Wake-Hover FW-H pipeline used to predict flyover/sideline noise.

Control Systems

$$\mathbf{x} = \begin{bmatrix} u \\ w \\ q \\ \theta \\ h \end{bmatrix}$$

- u = longitudinal (body-axis) velocity perturbation about trim V_0 (m/s),
- w = vertical (body-axis) velocity (m/s),
- q = pitch rate (rad/s),
- θ = pitch attitude (rad),
- h = altitude (m).

The governing (quasi-nonlinear) equations used in the numerical model are:

Longitudinal (surge) dynamics:

$$m\dot{u} = T - D - W\sin\theta + \text{(small coupling terms)}$$

Vertical (heave) dynamics:

$$m\dot{w} = -L - W\cos\theta + F_{\text{gust}}$$

Pitch dynamics:

$$I_{yy}\,\dot{q} = M_a + M_T + M_{\text{ctrl}}$$

Kinematics:

$$\dot{\theta} = q, \qquad \dot{h} = u\sin\theta + w\cos\theta \approx u\theta + w \quad \text{(small-angle)}.$$

where

$$L = \tfrac{1}{2}\rho U^2 S\, C_L(\alpha), \qquad D = \tfrac{1}{2}\rho U^2 S\, C_D,$$

and $\alpha \approx \theta - w/u$ (body-angle approximation).

- **Thrust-step response**:
  i) Aircraft quickly handles a step input with a small pitch oscillation (<1s settling time).
  ii) Lift overshoots and then stabilizes to support weight.
  iii) ***Match:*** This behavior aligns with classical pitch dynamics.
- **Gust response:**
  i) Angle-of-attack and altitude oscillate mildly around trim (~random curve - Dryden-like model).
  ii) PD Loop Function: The PD loop actively damps pitch swings. Altitude oscillations are small (no slow drift).
- **Interpretation:**
  i) Simulation Recovery: Quick recovery indicates sufficient stability margin.
  ii) Physical Response: Vehicle pitches slightly, then self-corrects after turbulence.
  iii) The governing equation for longitudinal dynamics $\ddot{x} + (c/m)\dot{x} + (k/m)x = (F_0/m)\sin\omega t$ shows no resonance for our parameter range.
- **Conclusion:** Design features neutral static stability combined with active damping, ensuring good gust rejection.

Business Model

Unit Economics

- **DOC breakdown:** Total direct operating cost per flight is: $C_{flight} = C_{energy} + C_{crew} + C_{maint} + C_{airport}$ with cost per seat-km CASK = $C_{flight}/(N_{\text{seats}} R_{km})$.

- **Dominant Factors:** Crew and Amortization (approx. 22,000 INR out of 26,140 INR total).
  CASK≈**26.1 INR/(seat.km)** (≈$0.32/km) (=26140/(8*125))

- **Energy & range:**

i) Requirement: approx 12.5 kg of battery pack at 400 Wh/kg needed for cruise.

ii) Reality: Total pack mass may be 1.5-3 times larger for reserves. Battery mass is the primary range limiter.

- **DEP-blown benefits:** The use of distributed electric propulsion and blown flaps boosts CL, allowing very short takeoff distance.

Lean Architecture & Infrastructure

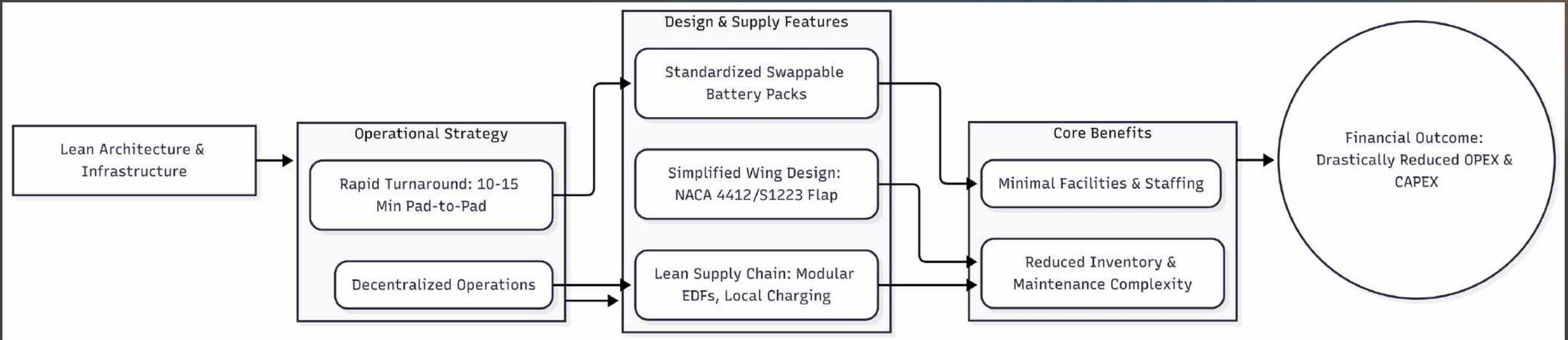

Futuristic Tech Comparison

Key results and implications

Diamond Aircraft VoloCity
(eVTOL multipcopter)

Key Results and Implications:

Other STOL/VTOL Concepts:

Often rely on all-electric VTOL air taxis, tilt-rotors, or circulation-control wings.
These promise performance but rely on still-maturing/speculative technology.

Our Niche: Practically implementable very soon:

Our design uses DEP + blown-flap STOL with off-the-shelf/near-term tech:
Proven airfoils (NACA 4412, S1223), brushless motors, and mature battery tech.
Mission Requirement: For an 8-seat, 125 km mission, we need an approx 12.5 kg battery (20-30 kg} total with reserves) at 400 Wh/kg. Current packs of 200–300 Wh/kg are feasible.

Final Aircraft Design Parameters		
	Parameter	Value
0	Design C_L (with flap)	7.2
1	Extra C_L by blown effect	5.3
2	L/D (flaps retracted)	~11
3	L/D (with flap)	7.739
4	Propulsion Type	EDF (Electric Ducted Fan)
5	Number of EDFs	4
6	EDF Thrust per unit	23.15 N
7	T/W Ratio	0.71
8	Safety Factor (Structure)	>150
9	Material	Aluminum Alloy
10	Spanwise Load Integration	Yes (q(y) via Prandtl LLT)
11	Thrust Modeling	Actuator Disk Theory + BEMT
12	Aerodynamic Modeling	LLT + CFD validated
13	Cost per Seat per km (CASK)	₹26.1
14	Minimum Runway	<40 m (simulated)
15	Controller Type	Nested PID + Stability Margins.
17	Power Budget (at cruise)	$\leq$1.8 kW

Review

Thank You