INTERFACING CAN BUS WITH RASPBERRY PI

BY: OMAR MEKKAWY

YOUTUBE: HTTPS://WWW.YOUTUBE.COM/@OMARMEKKAWY

LINKEDIN: HTTPS://WWW.LINKEDIN.COM/IN/OMAR-MEKKAWY/

WEBSITE: HTTPS://OMAR-MEKKAWY.COM

FACEBOOK: HTTPS://WWW.FACEBOOK.COM/OMARMEKKAWYOFFICIAL/

GITHUB: HTTPS://GITHUB.COM/OMARKMEKKAWY

CAN Bus Transceiver
MCP2551 – TJA1050

Termination Option
120R Resistor

Power LED

10K resistor for
RESET pullup

CANL

CANH

Interface Connector

Stabilization
Capacitors

Crystal (8MHz)

MCP2515
CAN Controller

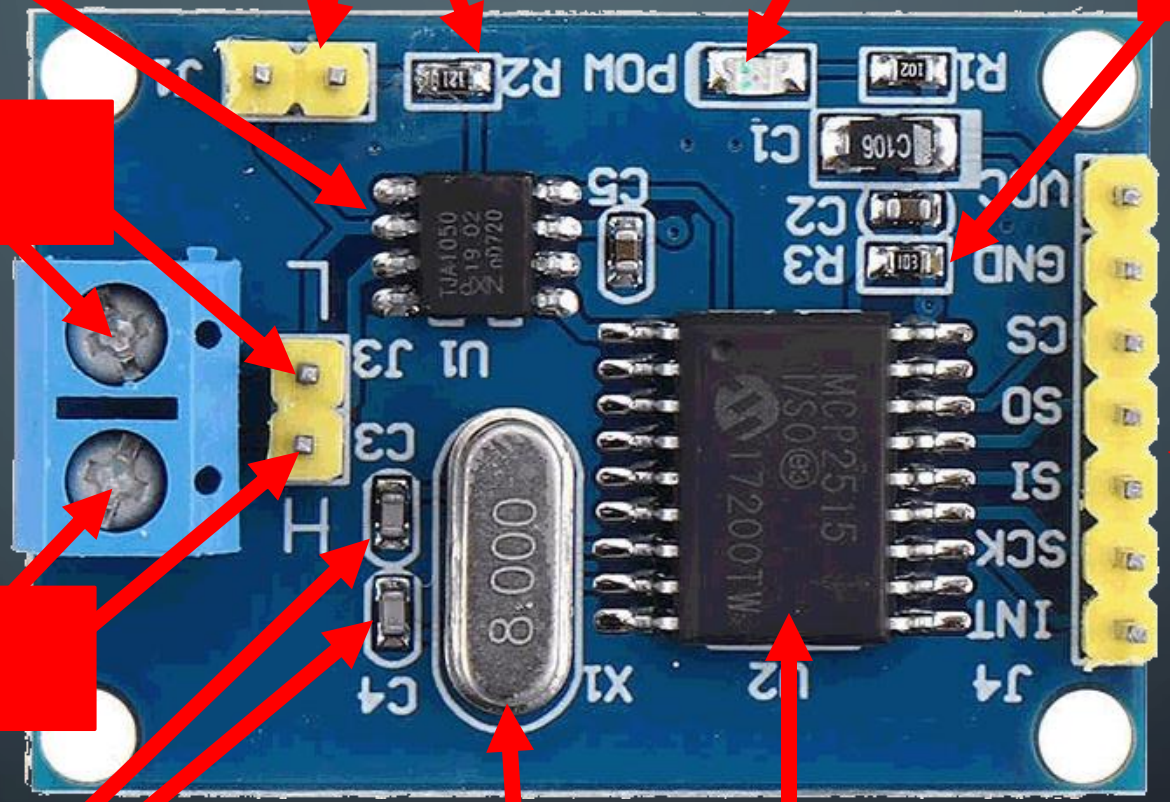

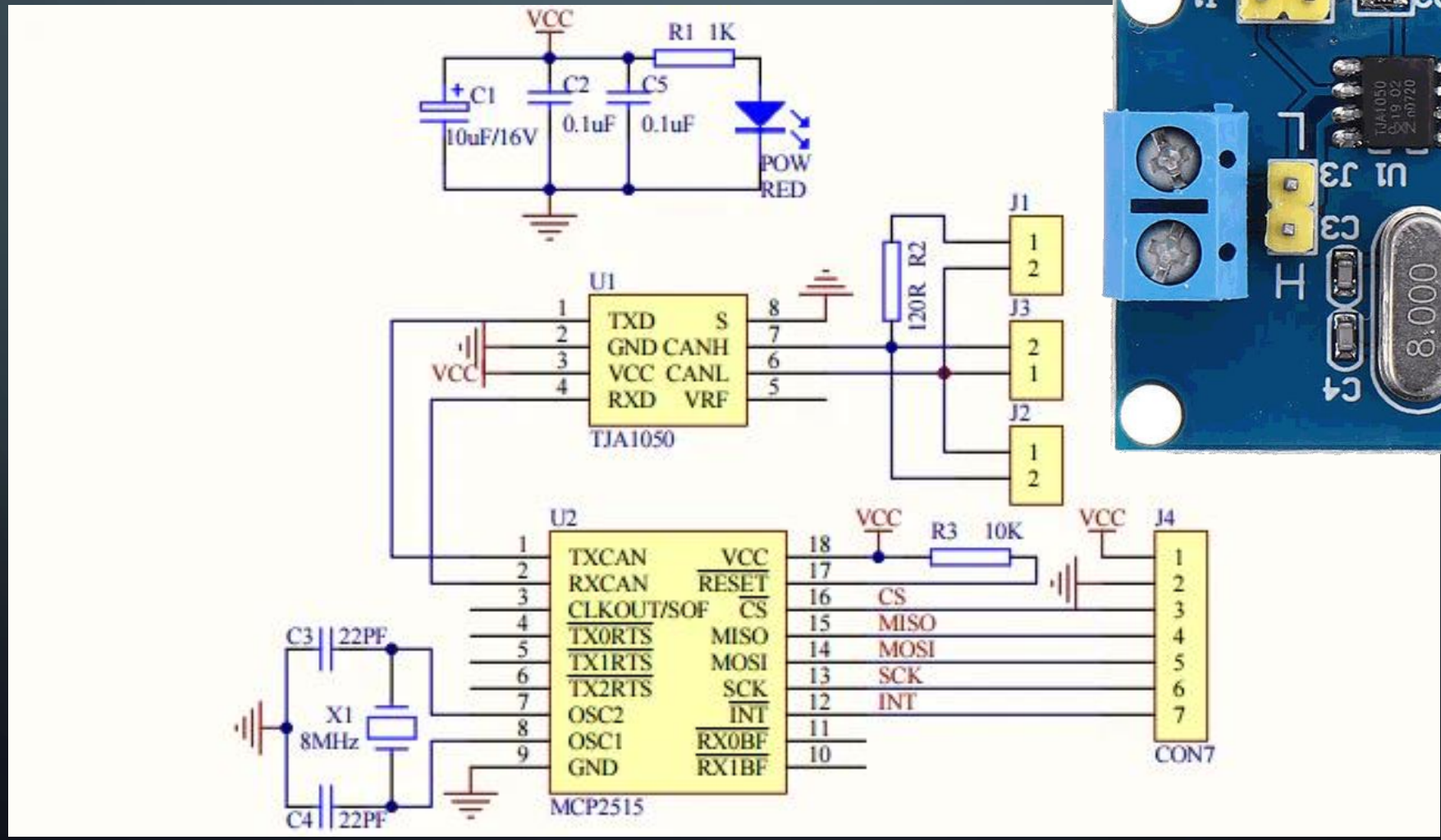
VCC
R1 1K
C1
10uF/16V
C2
0.1uF
C5
0.1uF
POW
RED
U1
TXD S
GND CANH
VCC CANL
RXD VRF
TJA1050
VCC
R2
120R
J1
J3
J2
U2
TXCAN VCC
RXCAN RESET
CLKOUT/SOF CS
TX0RTS MISO
TX1RTS MOSI
TX2RTS SCK
OSC2 INT
OSC1 RX0BF
GND RX1BF
MCP2515
VCC
R3 10K
VCC
J4
CS
MISO
MOSI
SCK
INT
CON7
C3 22PF
X1
8MHz
C4 22PF

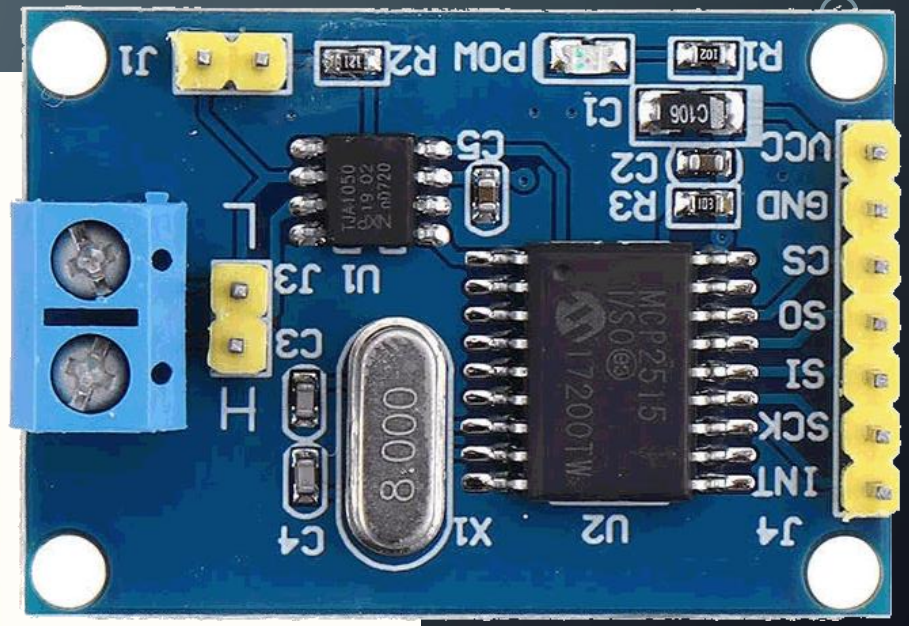
J1
POW
R2
R1
C1
C5
VCC
C2
GND
R3
CS
SO
SI
SCK
INT
J3
U1
C3
C4
X1
U2
J4
8.000

High speed CAN transceiver TJA1050

FEATURES

- Fully compatible with the *"ISO 11898"* standard
- High speed (up to 1 Mbaud)
- Very low ElectroMagnetic Emission (EME)
- Differential receiver with wide common-mode range for high ElectroMagnetic Immunity (EMI)
- An unpowered node does not disturb the bus lines
- Transmit Data (TXD) dominant time-out function
- Silent mode in which the transmitter is disabled
- Bus pins protected against transients in an automotive environment
- Input levels compatible with 3.3 V and 5 V devices
- Thermally protected
- Short-circuit proof to battery and to ground
- At least 110 nodes can be connected.

GENERAL DESCRIPTION

The TJA1050 is the interface between the Controller Area Network (CAN) protocol controller and the physical bus. The device provides differential transmit capability to the bus and differential receive capability to the CAN controller.

The TJA1050 is the third Philips high-speed CAN transceiver after the PCA82C250 and the PCA82C251. The most important differences are:

- Much lower electromagnetic emission due to optimal matching of the output signals CANH and CANL
- Improved behaviour in case of an unpowered node
- No standby mode.

This makes the TJA1050 eminently suitable for use in nodes that are in a power-down situation in partially powered networks.

Minimum Supply Voltage

QUICK REFERENCE DATA

SYMBOL	PARAMETER	CONDITIONS	MIN.	MAX.	UNIT
V_{CC}	supply voltage		4.75	5.25	V
V_{CANH}	DC voltage at pin CANH	$0 < V_{CC} < 5.25$ V; no time limit	–27	+40	V
V_{CANL}	DC voltage at pin CANL	$0 < V_{CC} < 5.25$ V; no time limit	–27	+40	V
$V_{i(dif)(bus)}$	differential bus input voltage	dominant	1.5	3	V
$t_{PD(TXD-RXD)}$	propagation delay TXD to RXD	$V_S = 0$ V; see Fig.7	–	250	ns
T_{vj}	virtual junction temperature		–40	+150	°C

SOLUTION??

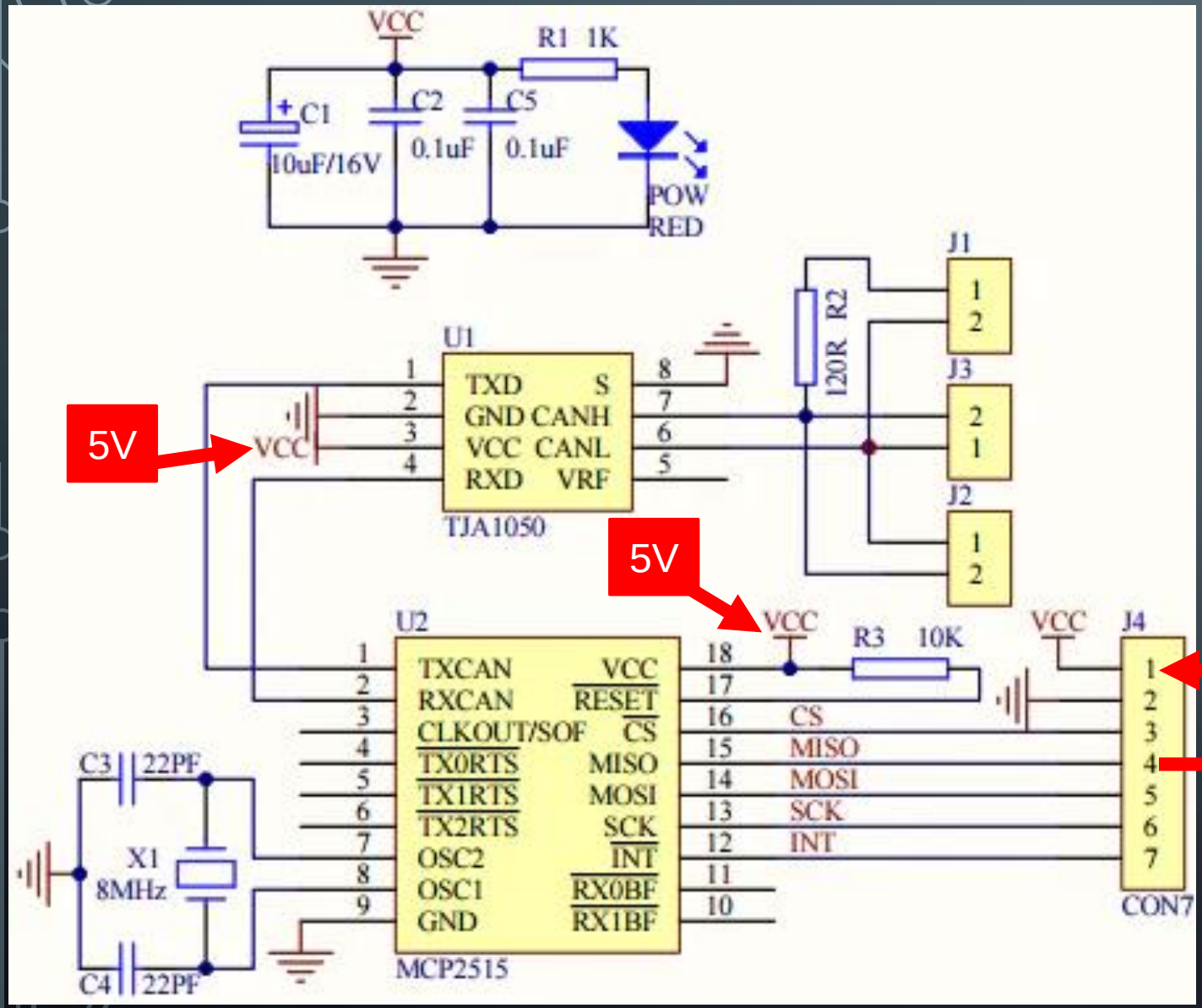

5V

5V

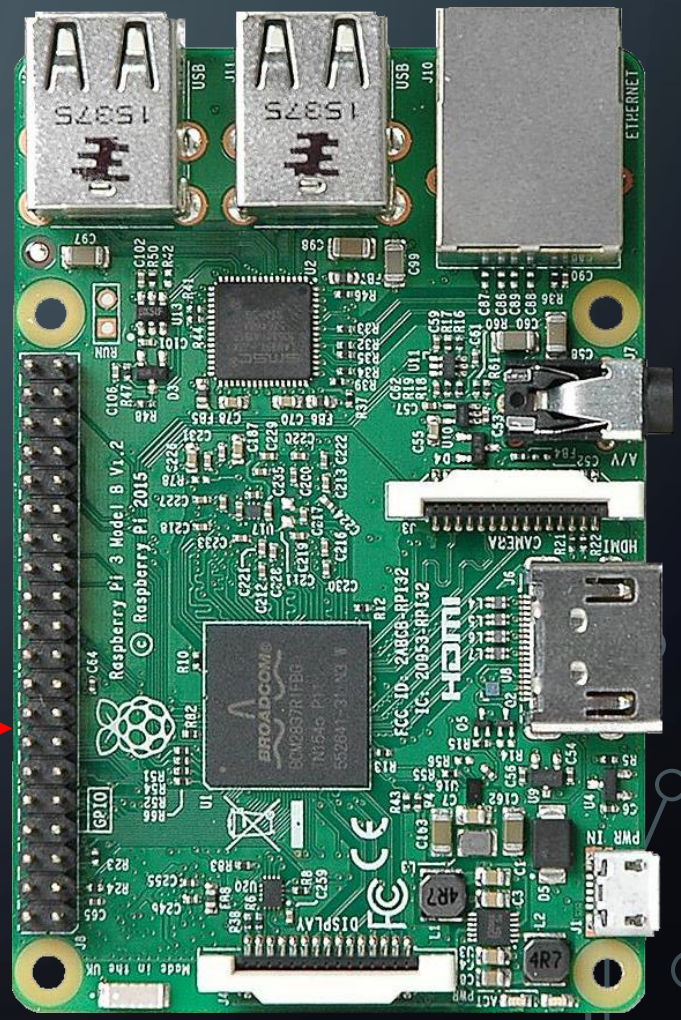

ESD DIODES!!

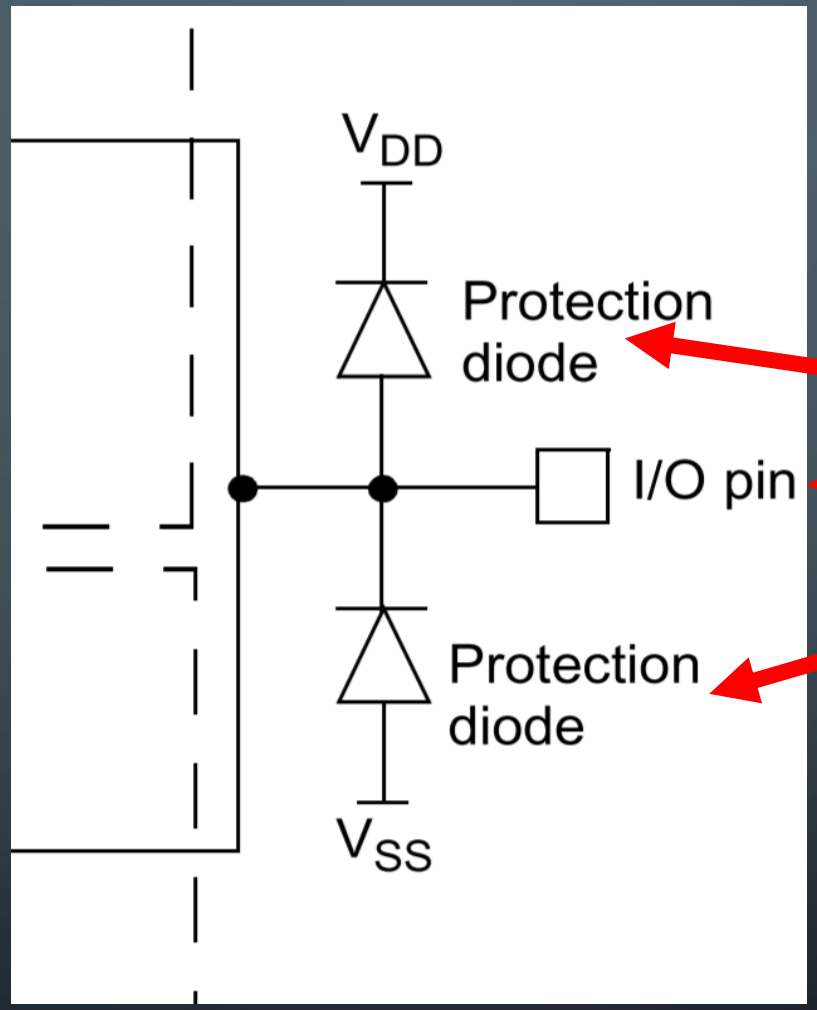

GPIO

ESD Diodes (Inside IC)

SOLUTION 1??

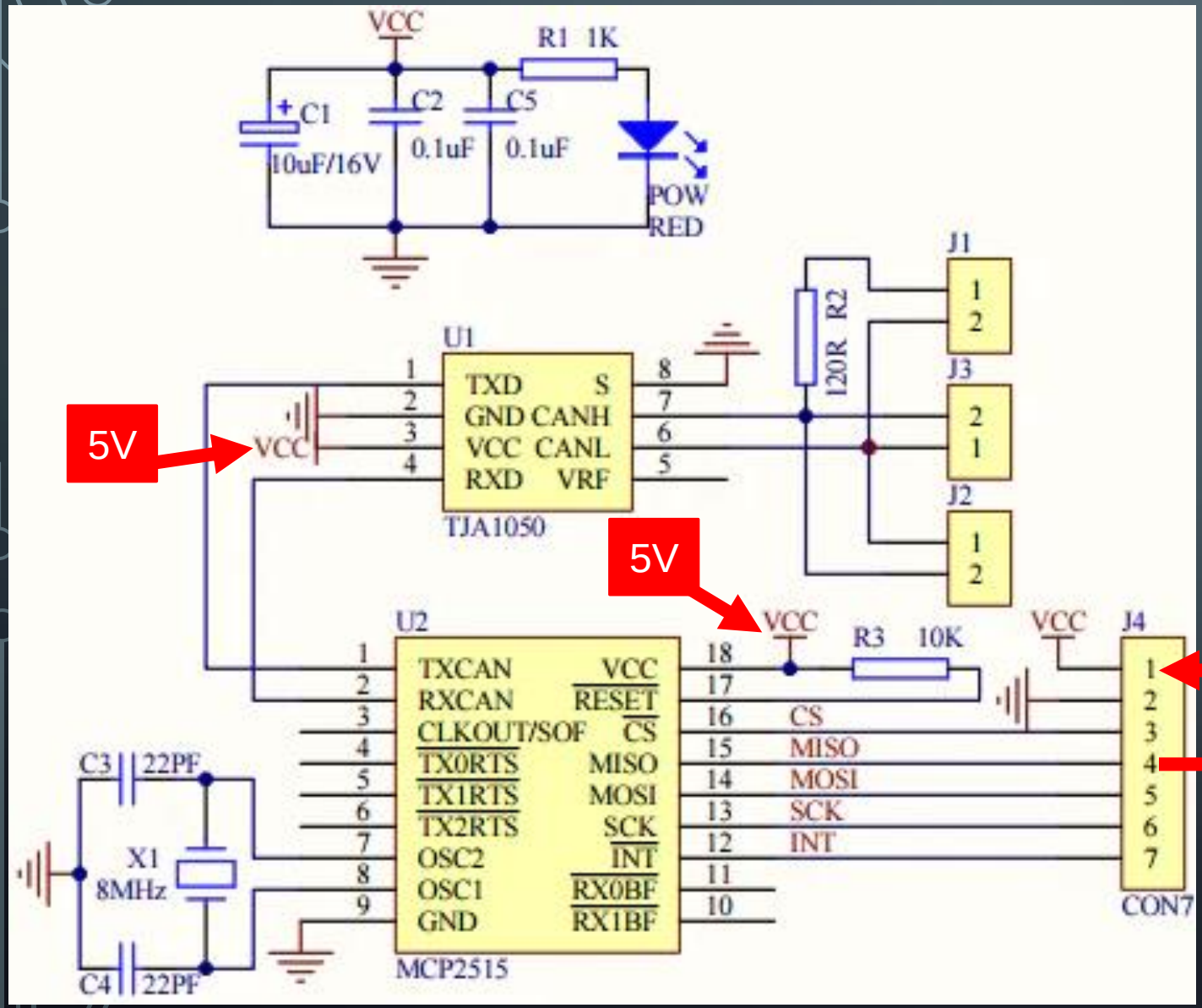

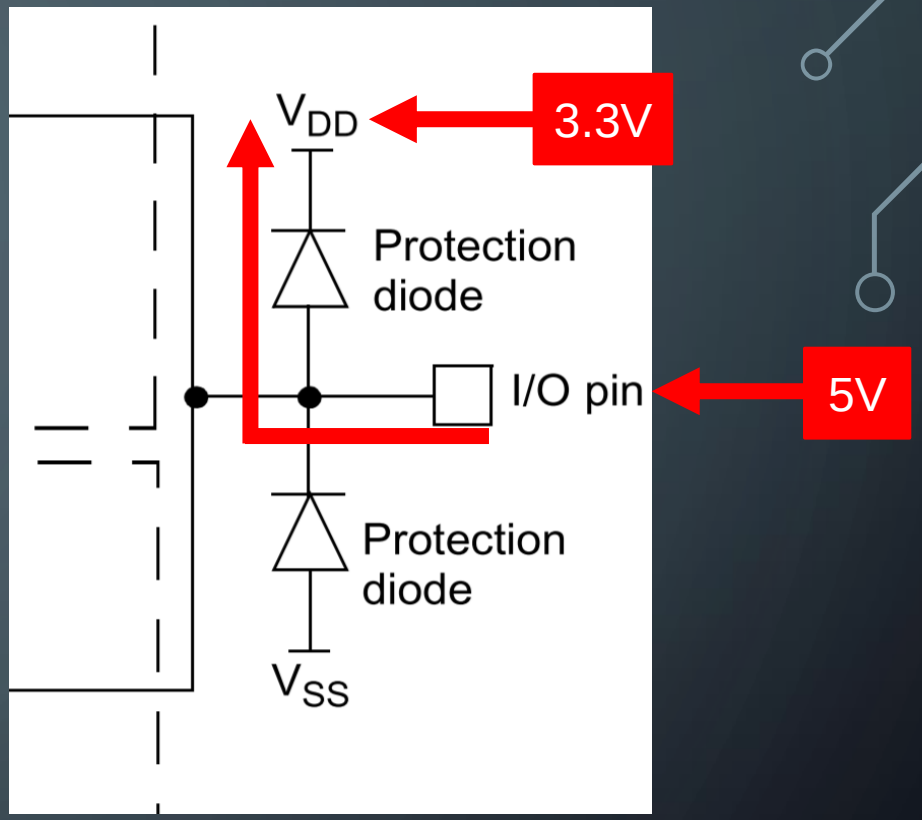

5V

5V

SOLUTION 1??

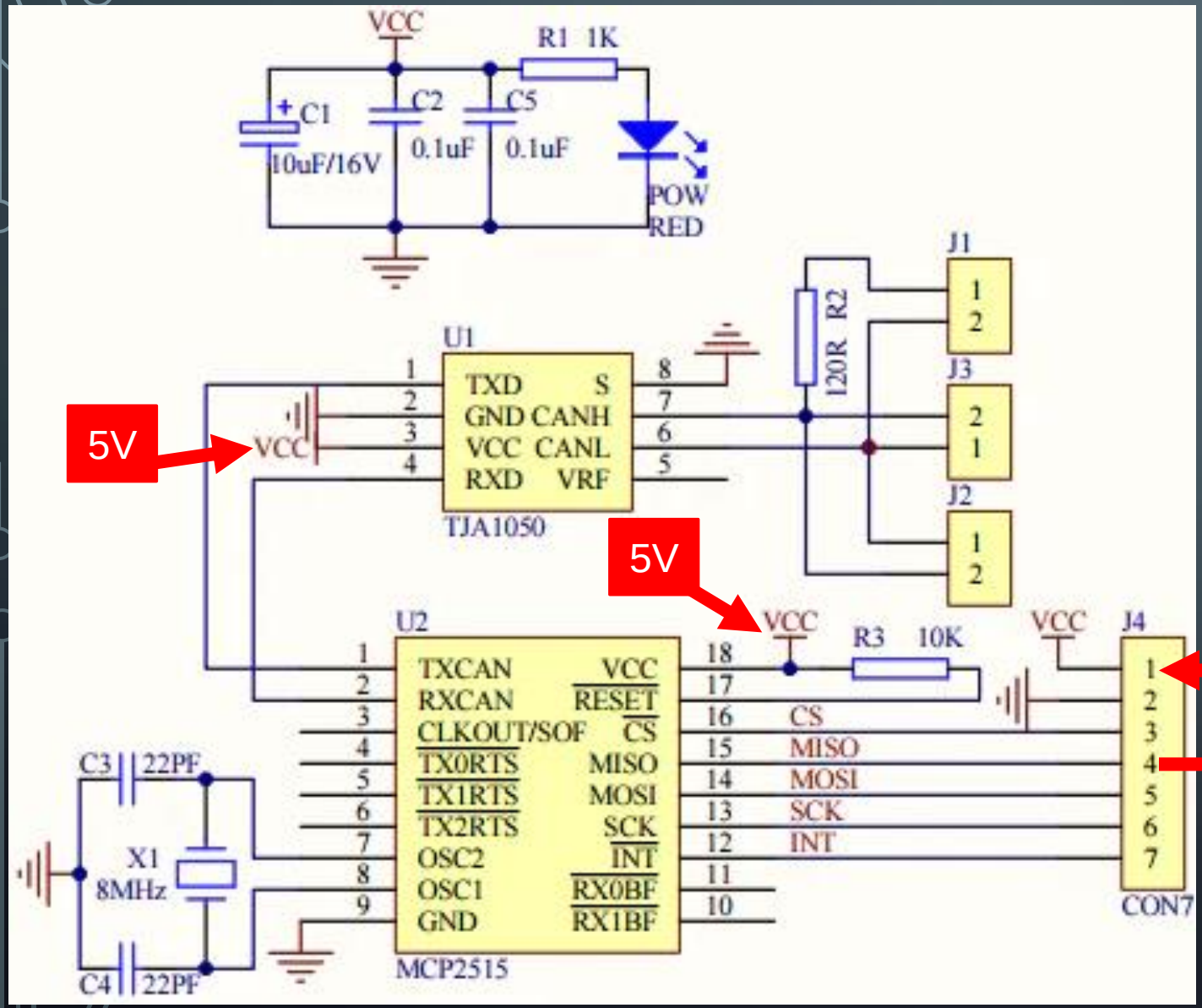

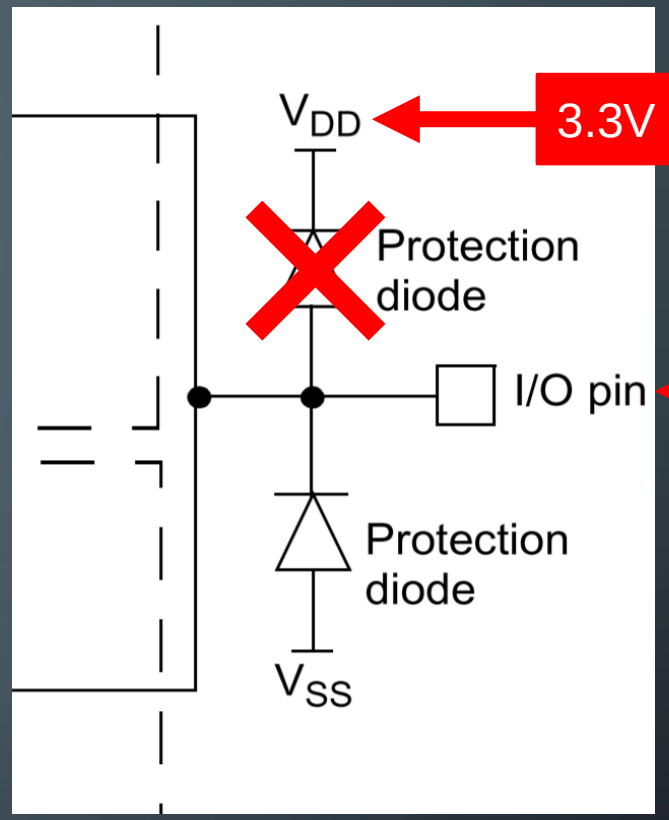

5V

5V

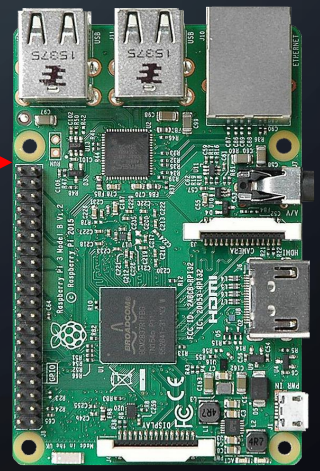

SOLUTION 2??

- GitHub Link: https://github.com/tolgakarakurt/CANBus-MCP2515-Raspi
  - Modifying the PCB to power the TJA1050/MCP2551 only with the 5V.
  - Requires advanced tools like:
    - A thin, sharp knife, similar to (medical surgery knives).
    - A soldering iron is required.
    - Solder (leaded solder is preferable).
    - Soldering Flux.
    - Isopropyl alcohol (IPA) is used to clean PCBs.

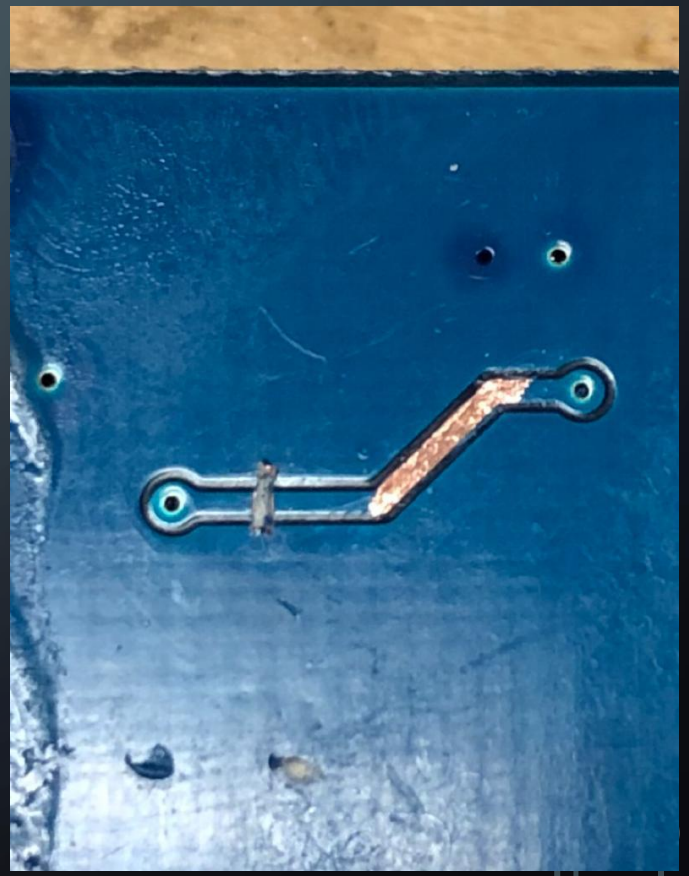

SOLUTION 3??

- Using “SN65HVD230” transceiver.
  - Pin-to-Pin compatible with TJA1050 & MCP2551.
  - Works with 3.3V.
  - Available in Egypt.

Minimum Supply Voltage

8.3 Recommended Operating Conditions

		MIN	NOM	MAX	UNIT
Supply voltage, V_{CC}		3		3.6	V
Voltage at any bus terminal (common mode) V_{IC}		–2 (1)		7	V
Voltage at any bus terminal (separately) V_I		–2.5		7.5	V
High-level input voltage, V_{IH}	D, R	2			V
Low-level input voltage, V_{IL}	D, R			0.8	V
Differential input voltage, V_{ID} (see Figure 22)		–6		6	V
Input voltage, $V_{(Rs)}$		0		V_{CC}	V
Input voltage for standby or sleep, $V_{(Rs)}$		0.75 V_{CC}		V_{CC}	V
Wave-shaping resistance, Rs		0		100	kΩ
High-level output current, I_{OH}	Driver	–40			mA
	Receiver	–8			
Low-level output current, I_{OL}	Driver			48	mA
	Receiver			8	
Thermal shutdown temperature			165		°C
Thermal shutdown hysteresis			10		
Operating free-air temperature, T_A		–40		85	

SOLUTION 3??

- https://uge-one.com/sn65hvd230-high-speed-3-3v-can-transceiver-smd-sop8.html

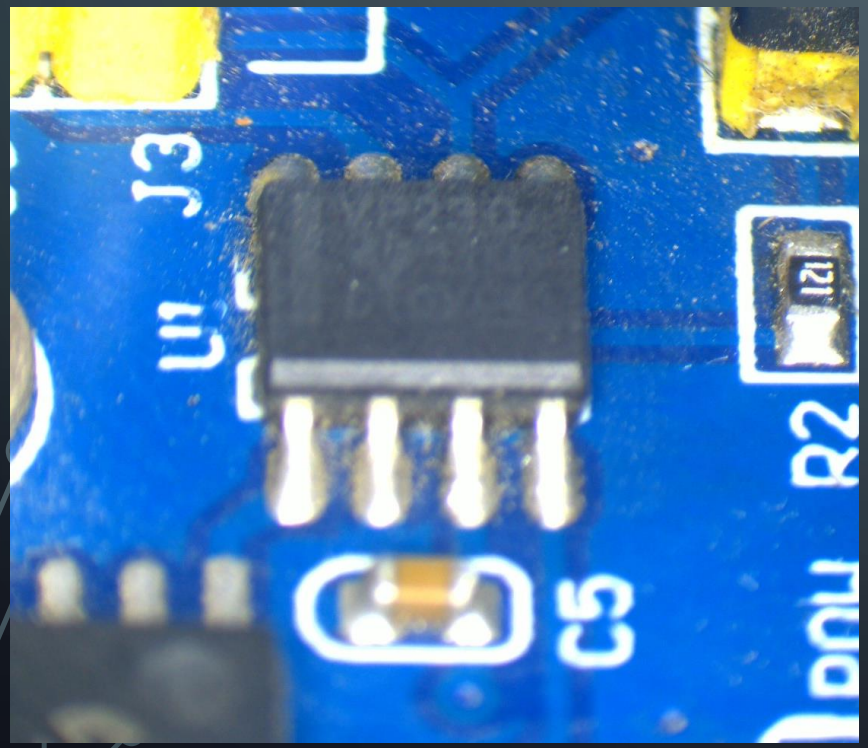

SN65HVD230 High-Speed 3.3V CAN Transceiver SMD SOP8

SN65HVD230

3.3V CAN Transceiver IC

- Shobra Branch :0
- Heliopolis Branch :36
- Stock: 36
- Brand: Chinese
- Model: SN65HVD230-SOP8
- Weight: 0.00kg
- SKU: D10-1
- UPC: OK
- Location: O4-1

Product Views: 1283

☆☆☆☆☆ Based on 0 reviews. - Write a review

65.00EGP

1 Add to Cart

Add to Wish List Compare this Product

MY GITHUB REPOSITORY

- https://github.com/omarKmekkawy/RaspberryPi_MCP2515_CAN