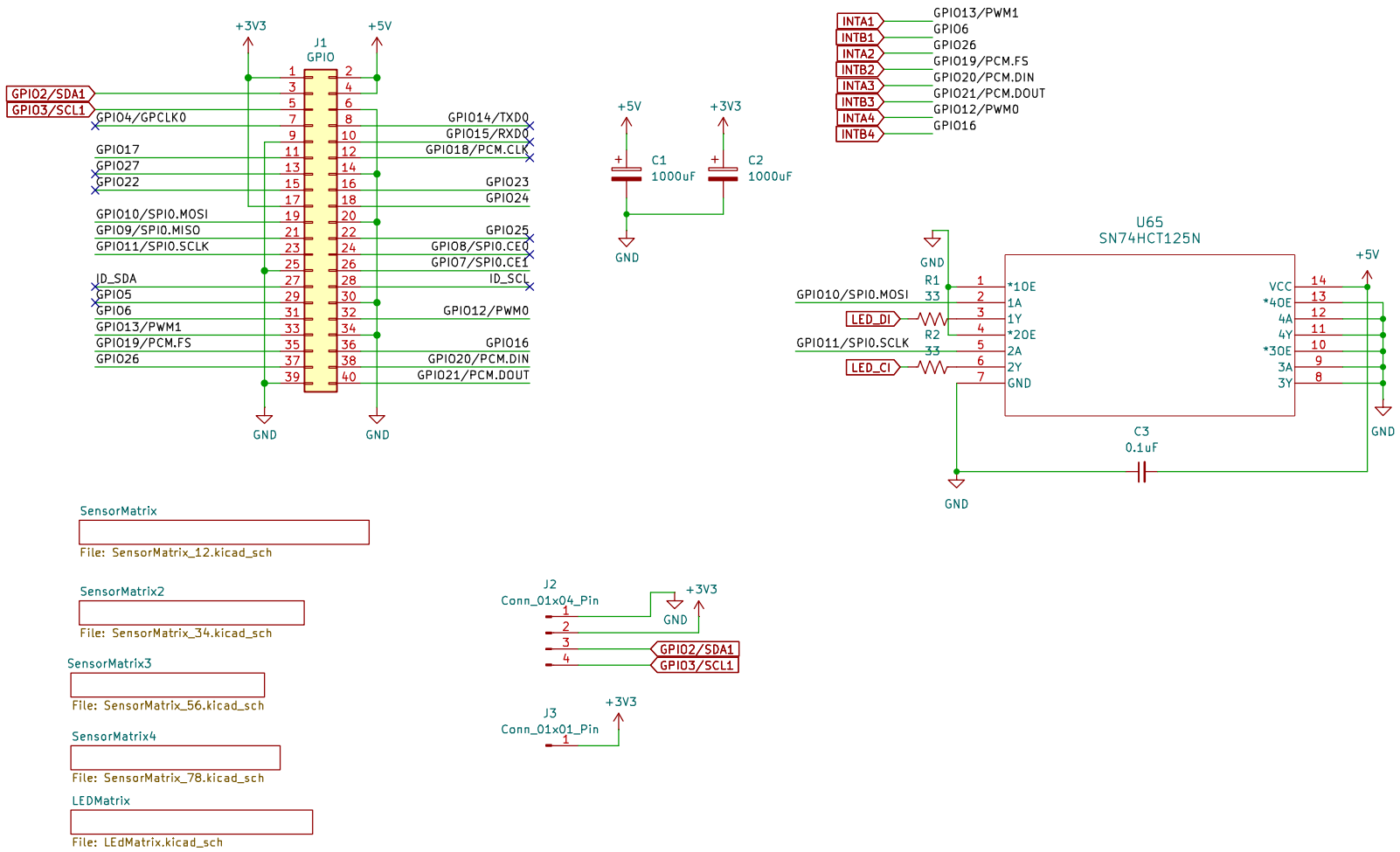

https://pinout.xyz/

Sheet: /
File: LightMate8x8.kicad_sch

Title: LightMate

Size: A4	Date: 2026-03-12	Rev: 3
KiCad E.D.A. 10.0.1		Id: 1/6

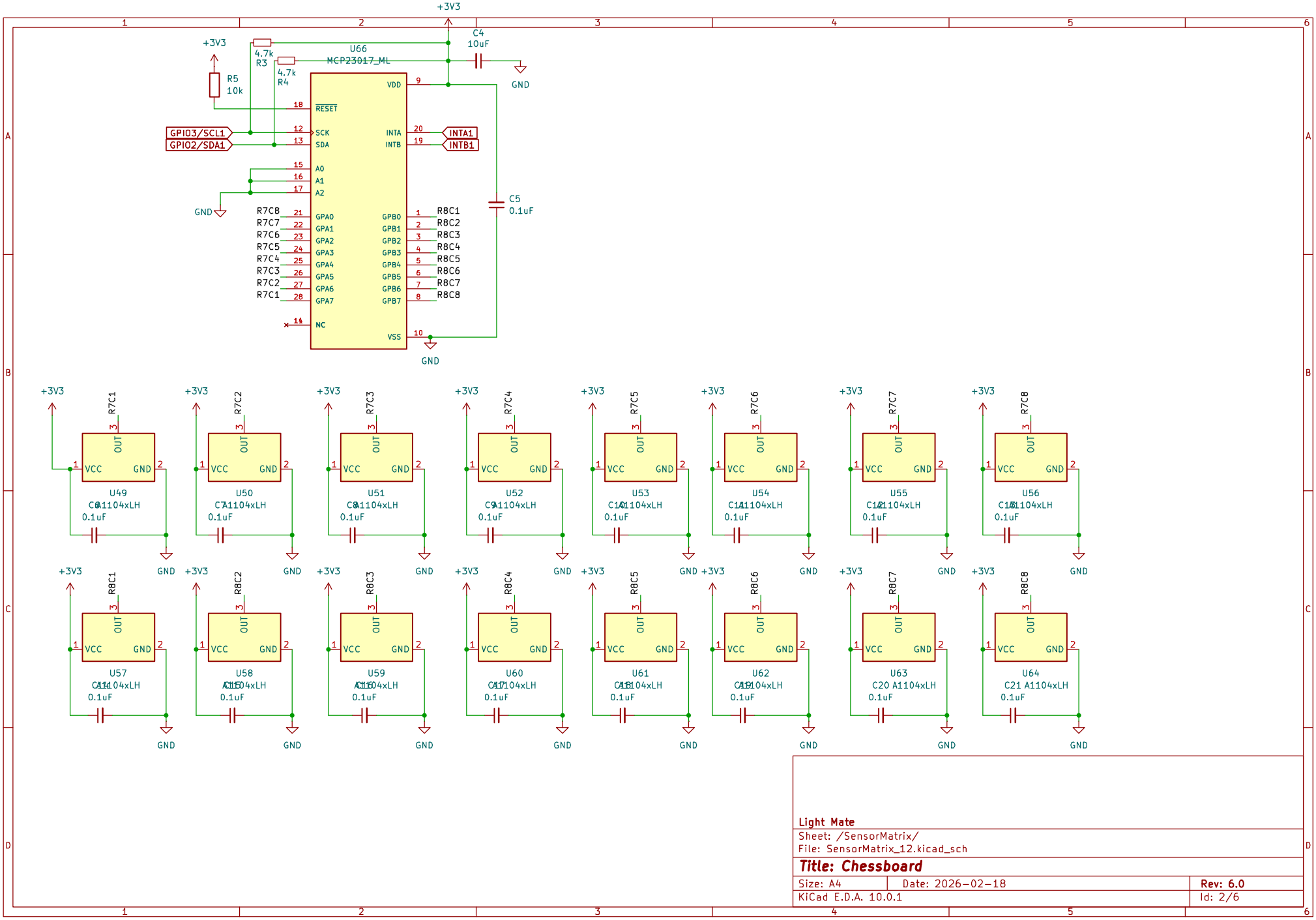

Light Mate

Sheet: /SensorMatrix/

File: SensorMatrix_12.kicad_sch

Title: Chessboard

Size: A4	Date: 2026-02-18	**Rev: 6.0**
KiCad E.D.A. 10.0.1		Id: 2/6

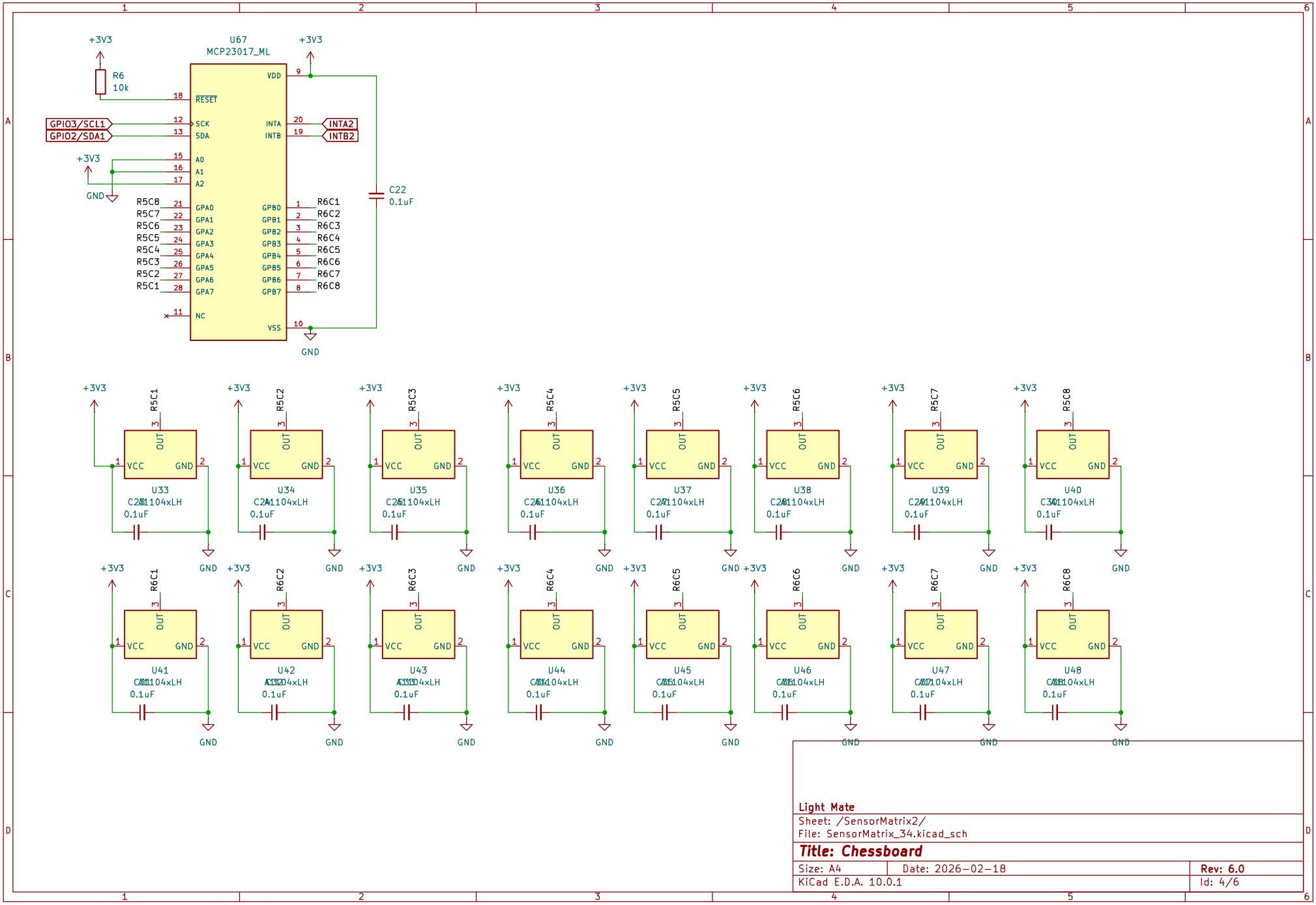
U67
MCP23017_ML
+3V3
R6
10k
RESET
GPIO3/SCL1
GPIO2/SDA1
SCK
SDA
INTA
INTB
INTA2
INTB2
A0
A1
A2
GND
VDD
VSS
NC
GPA0
GPA1
GPA2
GPA3
GPA4
GPA5
GPA6
GPA7
GPB0
GPB1
GPB2
GPB3
GPB4
GPB5
GPB6
GPB7
R5C8
R5C7
R5C6
R5C5
R5C4
R5C3
R5C2
R5C1
R6C1
R6C2
R6C3
R6C4
R6C5
R6C6
R6C7
R6C8
C22
0.1uF
U33
U34
U35
U36
U37
U38
U39
U40
U41
U42
U43
U44
U45
U46
U47
U48
VCC
OUT
C2011104xLH
0.1uF
Light Mate
Sheet: /SensorMatrix2/
File: SensorMatrix_34.kicad_sch
Title: Chessboard
Size: A4
Date: 2026-02-18
Rev: 6.0
KiCad E.D.A. 10.0.1
Id: 4/6

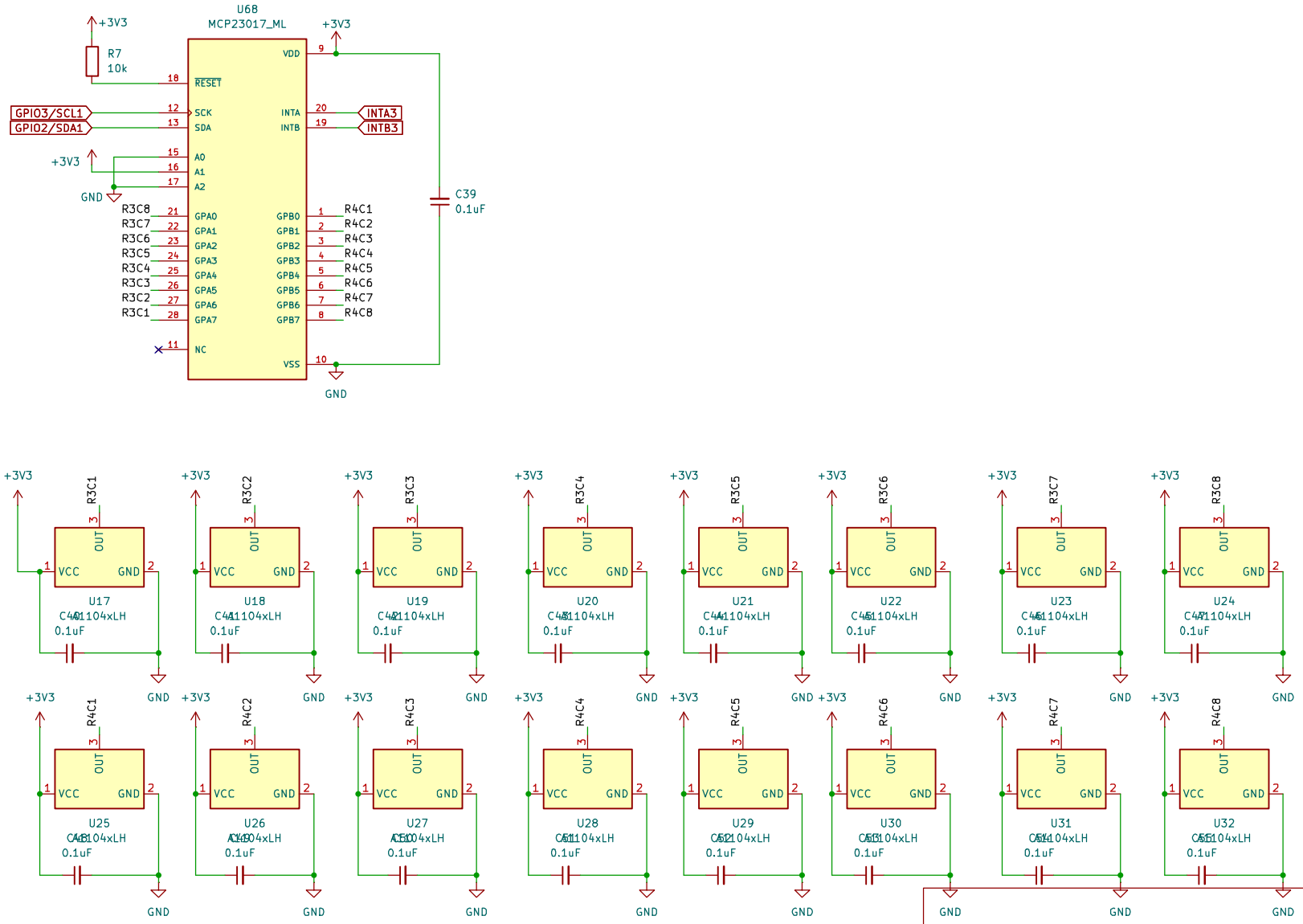

Light Mate

Sheet: /SensorMatrix3/

File: SensorMatrix_56.kicad_sch

Title: Chessboard

Size: A4	Date: 2026-02-18	Rev: 6.0
KiCad E.D.A. 10.0.1		Id: 5/6

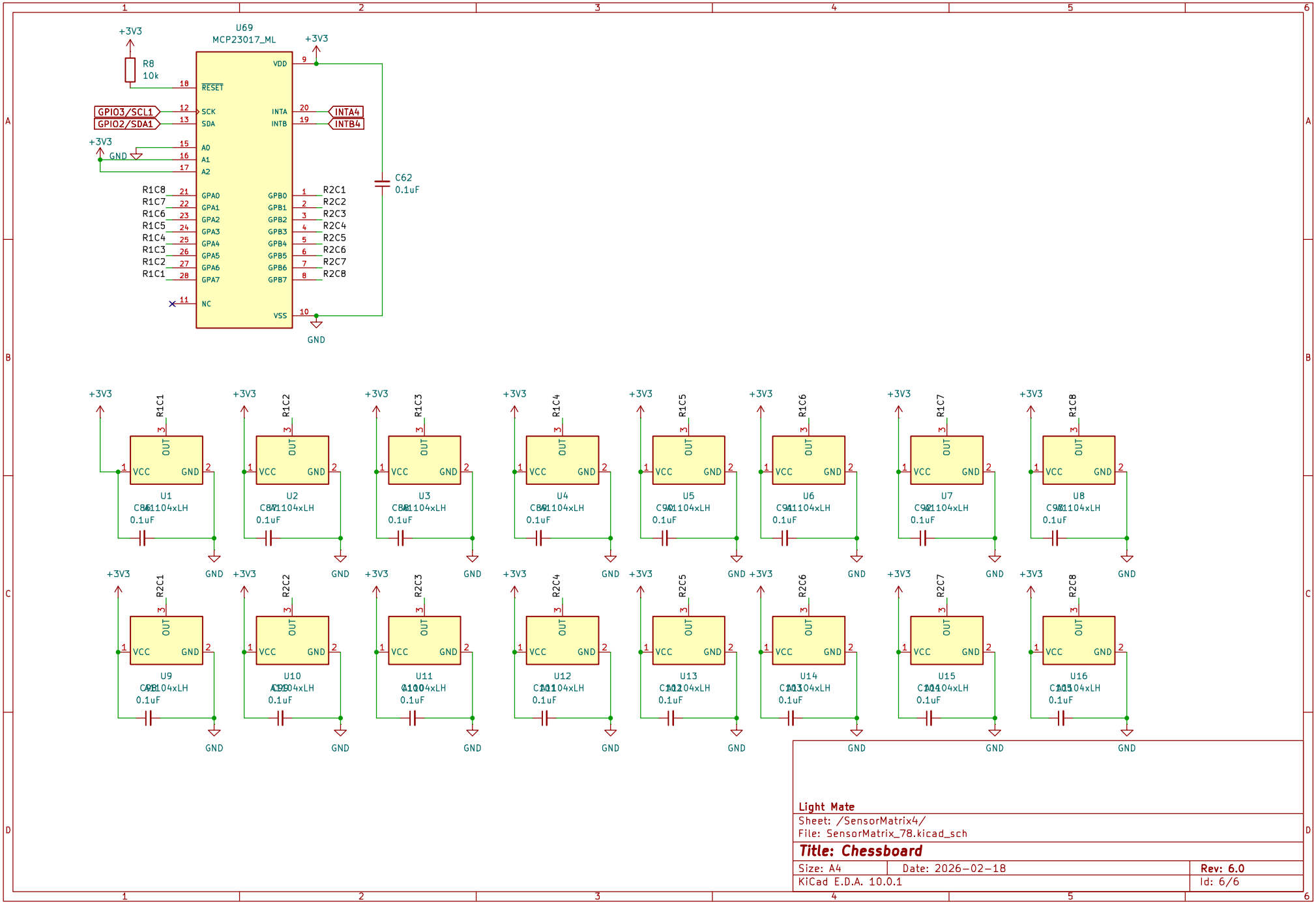

Light Mate

Sheet: /SensorMatrix4/

File: SensorMatrix_78.kicad_sch

Title: Chessboard

Size: A4	Date: 2026-02-18	Rev: 6.0
KiCad E.D.A. 10.0.1		Id: 6/6

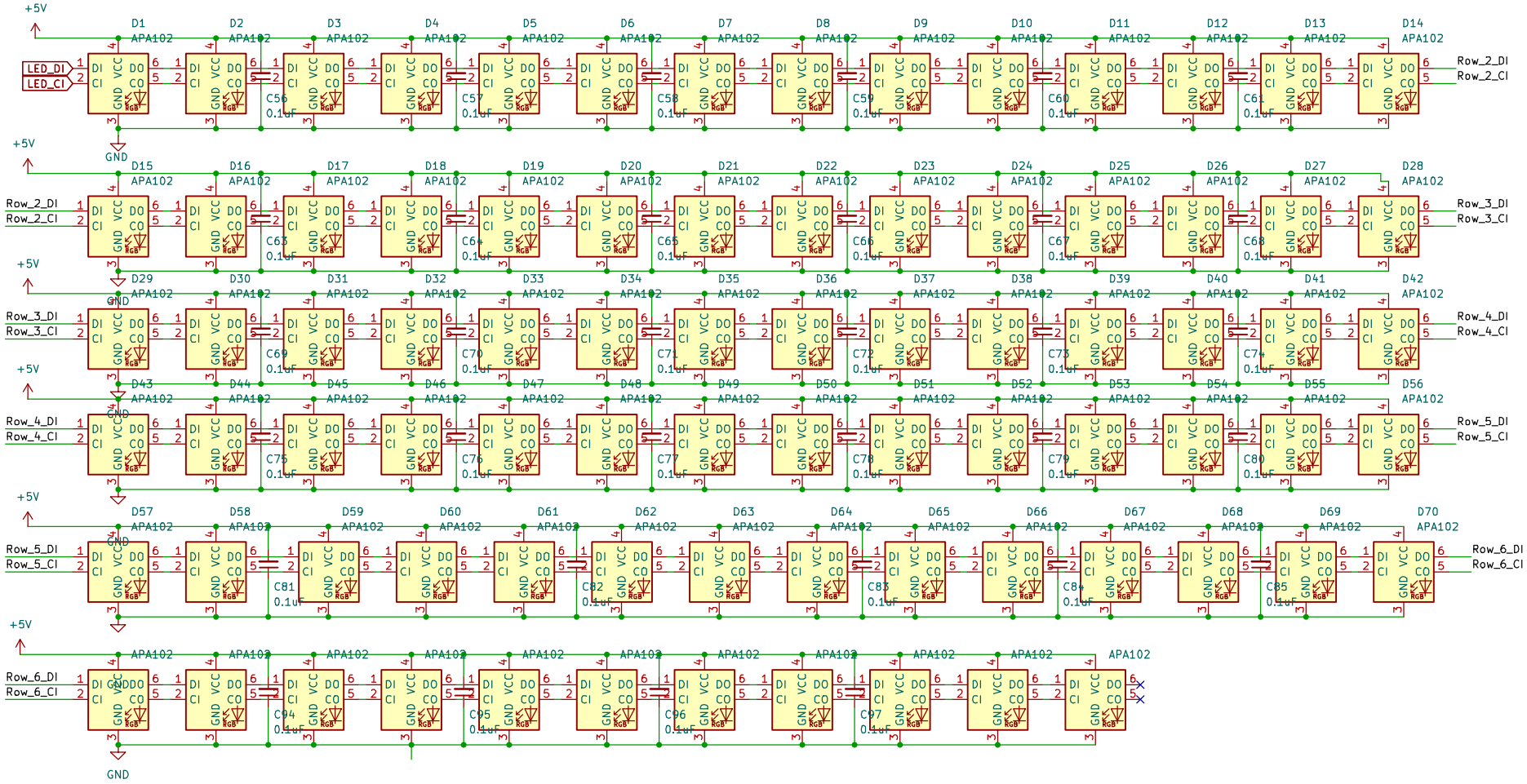

Light Mate

Sheet: /LEDMatrix/

File: LEdMatrix.kicad_sch

Title: Chessboard

Size: A4	Date: 2026-02-18	Rev: 6.0
KiCad E.D.A. 10.0.1		Id: 6/6