SAKARYA UNIVERSITY

EEM101

Introduction to Electrical - Electronics Engineering

2020 – 2021 Fall Term

Project ID:	B17
Project Title:	**LIGHT CIRCUIT RUNNING IN THE COLD WITH NTC**
Project Group:	3

Project Report

Prepared By

Name Surname	**Student ID**
Ömer Faruk Oruç	G190100063

Delivery Date: 29.12.2020

Instructor

Assoc. Prof. Dr. Şuayb Çağrı YENER

2020

ELECTRICAL - ELECTRONICS ENGINEERING

Content

İçindekiler

1 Introduction.....3

2 Design Steps.....4

3 Calculations.....10

4 Simulations.....13

5 Implementation Of The Circuit As A Whole Product.....14

6 Measurements Of Electrical Parameters (With Real And Simulation Values) And Conclusions.....15

7 Conclusion.....23

8 Gains.....24

9 References.....24

9.1 Main Reference(s).....24

9.2 Other Reference(s).....24

Project #	LIGHT CIRCUIT RUNNING IN THE COLD WITH NTC		
	#	Student Name and Surname	Student ID
HW #	1	ÖMER FARUK ORUÇ	G190100063

1 Introduction

This circuit is designed to operate at 23 ° C and below. This circuit can light up at 23 ° C and below. A unique circuit is made using basic circuit elements.

A- Challenges

⇒ Lack of sufficient coverage on this subject in many sources such as the Internet

⇒ Since it was the first time I was doing such a study, I lacked a lot of knowledge and experience.

⇒ Most of my circuit elements are broken.

⇒ While trying to make a PCB circuit, I could not use this method because I encountered many problems such as not mixing chemicals in the correct ratio.

⇒ I was in danger of fire because I used solder for the first time

B- Lıst Of the Circuit Elements

1 Piece ⇒ 1KΩ Resistance

2 Pieces ⇒ 680Ω Resistance

2 Pieces ⇒ 330Ω Resistance

1 Piece ⇒ 10KΩ NTC

1 Piece ⇒ LED

2 Pieces ⇒ BC237 [Transistor]

1 Piece ⇒ Battery [9V]

Project #	LIGHT CIRCUIT RUNNING IN THE COLD WITH NTC		
	#	Student Name and Surname	Student ID
HW #	1	ÖMER FARUK ORUÇ	G190100063

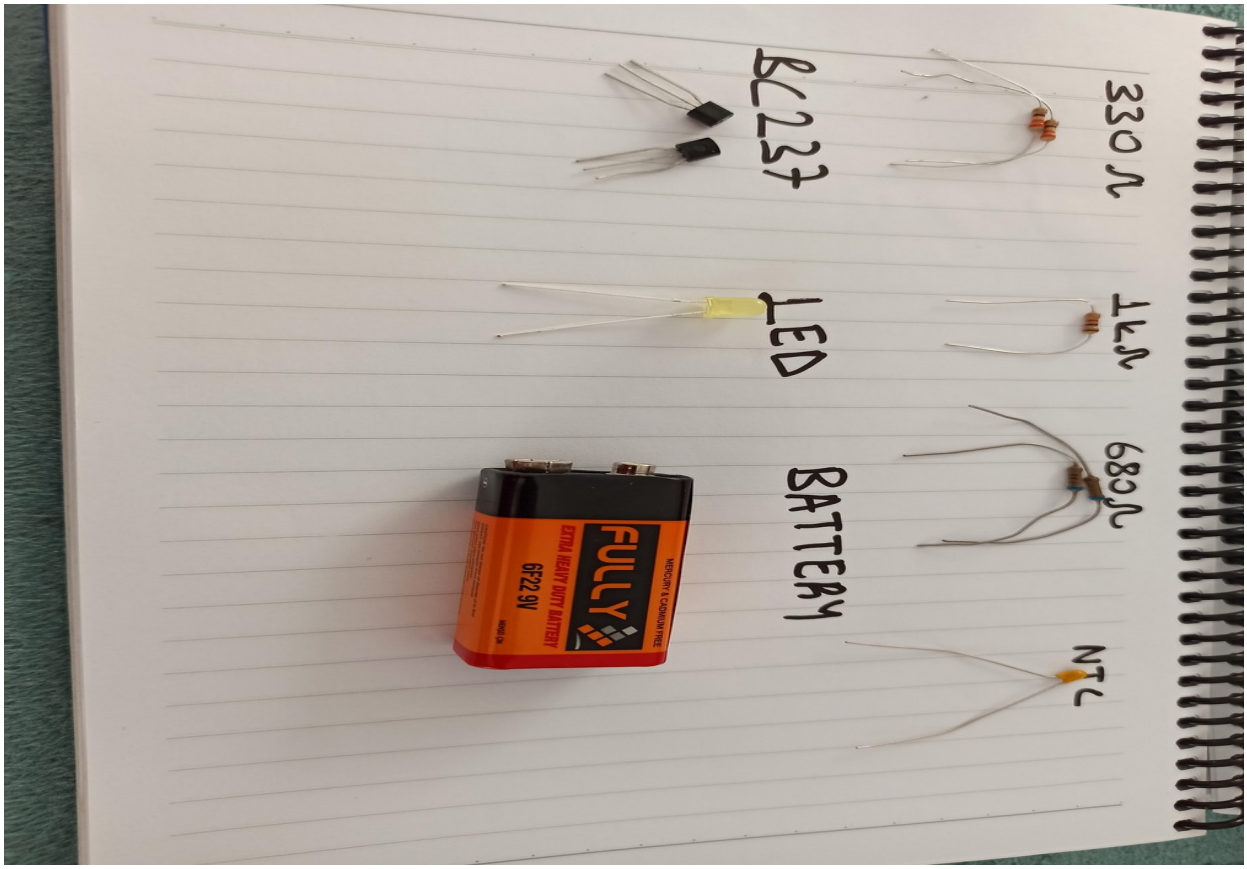

2 Design Steps

A- General Description Of All Stages

First I set out the scheme of the circuit on paper. Then, with the help of the Proteus program, I determined the values of my circuit elements to work at the temperature I wanted. After successfully performing the simulation, I observed the operability of the circuit on the breadboard. After this stage, I completed my permanent circuit with the help of a perforated plate. Finally, I ended my task by designing a box.

B- Explanation Of The Implementation Steps

B.1. Drawing Of The Circuit

I tried to design the cold version by observing the circuits running in the heat. I tried to reach the result with the logic I established by changing the circuit elements of the circuits working in heat. Finally, I successfully tested the circuit.

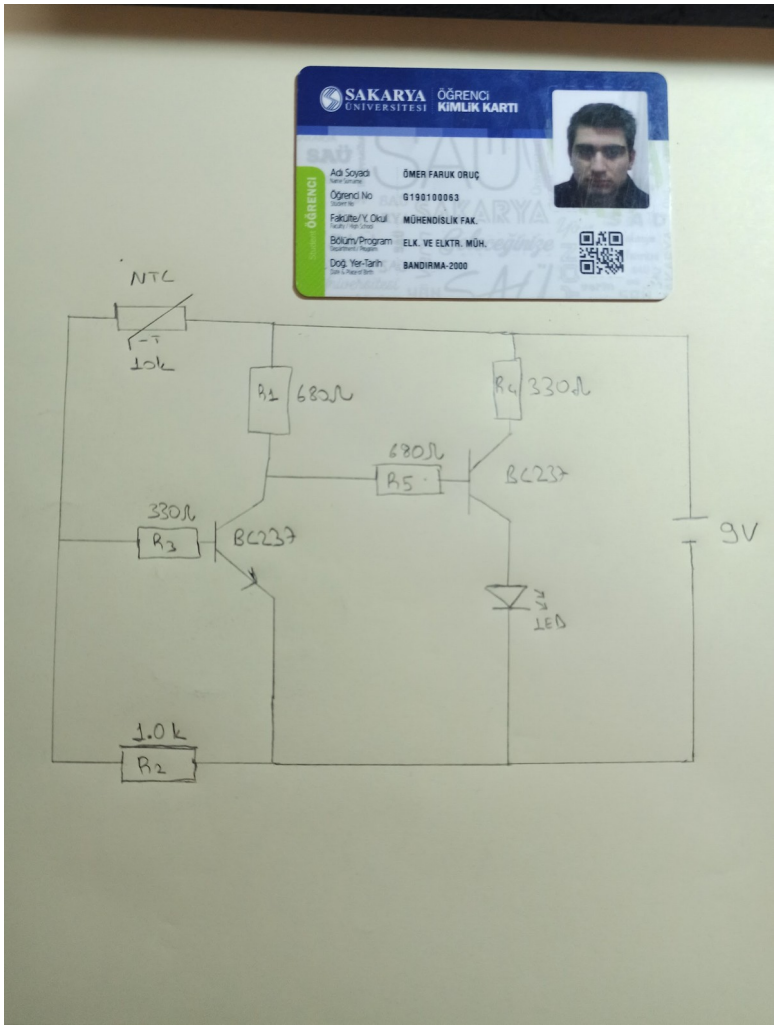

B.2. Simulation

I simulated to observe the operability of the circuit I drew on paper. I completed the circuit in the temperature range I wanted by making changes on the values of some circuit elements. I have successfully observed the operability of the circuit.

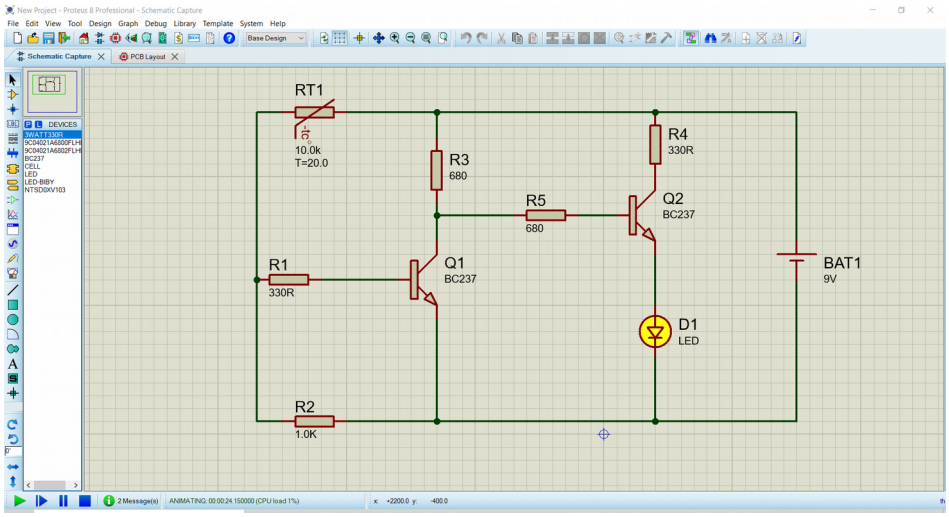

B.3. Realization With Breadboard

I made the right connection and got a successful result by paying attention to the options such as parallelism and seriality.

B.4. Realization With Perforated Plate

After I placed my circuit elements in the proper position, I mounted them with the help of solder. At this stage, although I encountered many failures and dangerous situations, I was successful as a result.

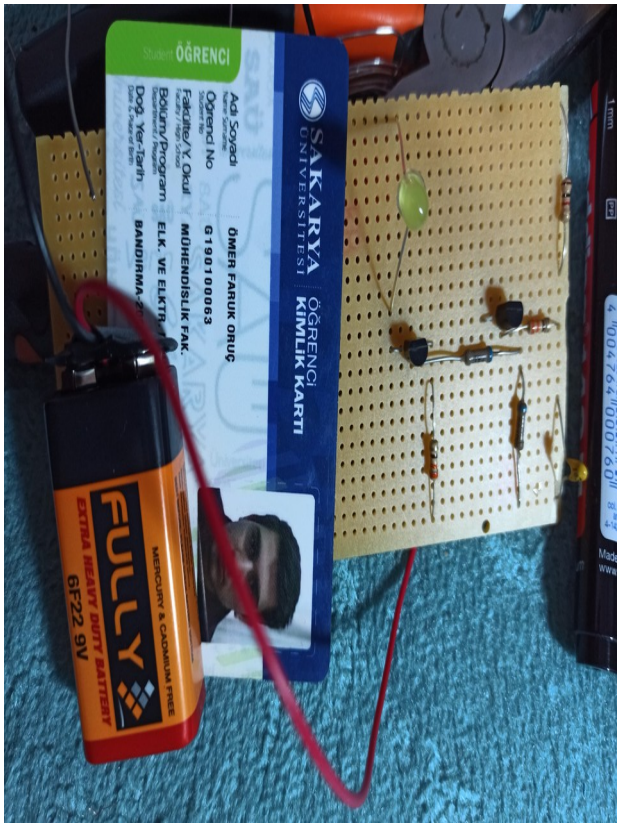

B.5. Box Design

I made the box design with cardboard. I made the LED visible in the design of the box because it is to check the operability of the circuit. The box has a simple and convenient design.

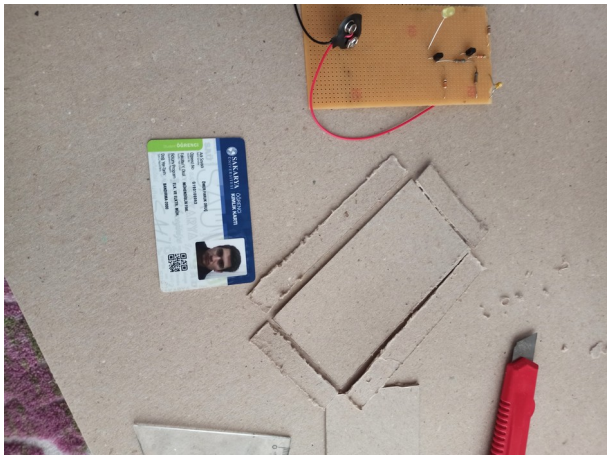

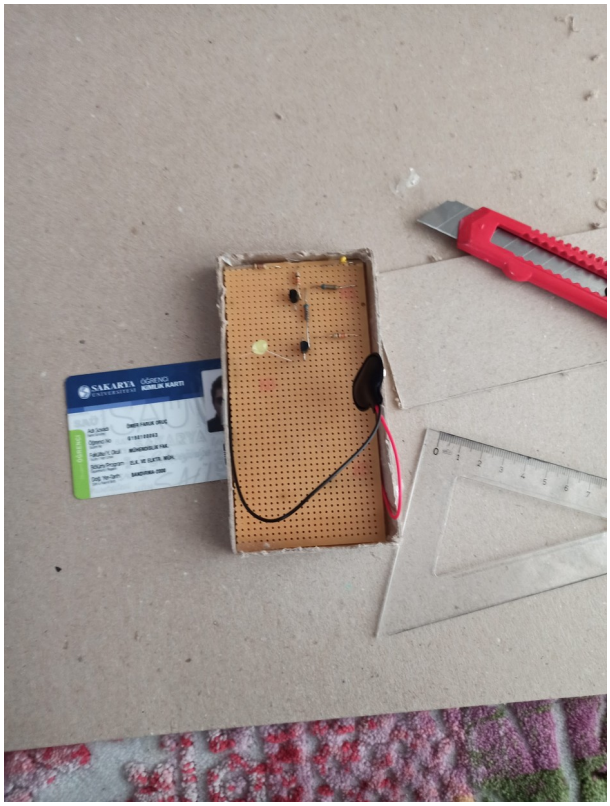

C – Assembly Method With Detailed Explanation

I paid close attention to the layout while placing the circuit elements in the proper position. These stages are as follows:

⇒ R2 is series in circuit

⇒ NTC is series to R2

⇒ R3 is the series between the line between R2 and NTC, and BJT1

⇒ Base leg of BJT1 is series to R3.

⇒ Emitter leg of BJT1 is series to (-) part of the circuit

⇒ Collector leg of BJT1 is series to R1

⇒ R1 is series to the (+) part of the circuit

⇒ R5 is series to BJT 2's Base leg with BJT 1's Collector leg.

⇒ R4 is series on the collector leg of BJT2 with the (+) part of the circuit.

⇒ The LED is located between the Emitter leg of the BJT 2 and the (-) part of the circuit.

While designing the circuit, I designed one leg of each R4, R1 and NTC elements to reach the (+) part of the circuit.

I soldered one leg of the resistor R2 and the leg of the LED to connect to the (-) part of the circuit.

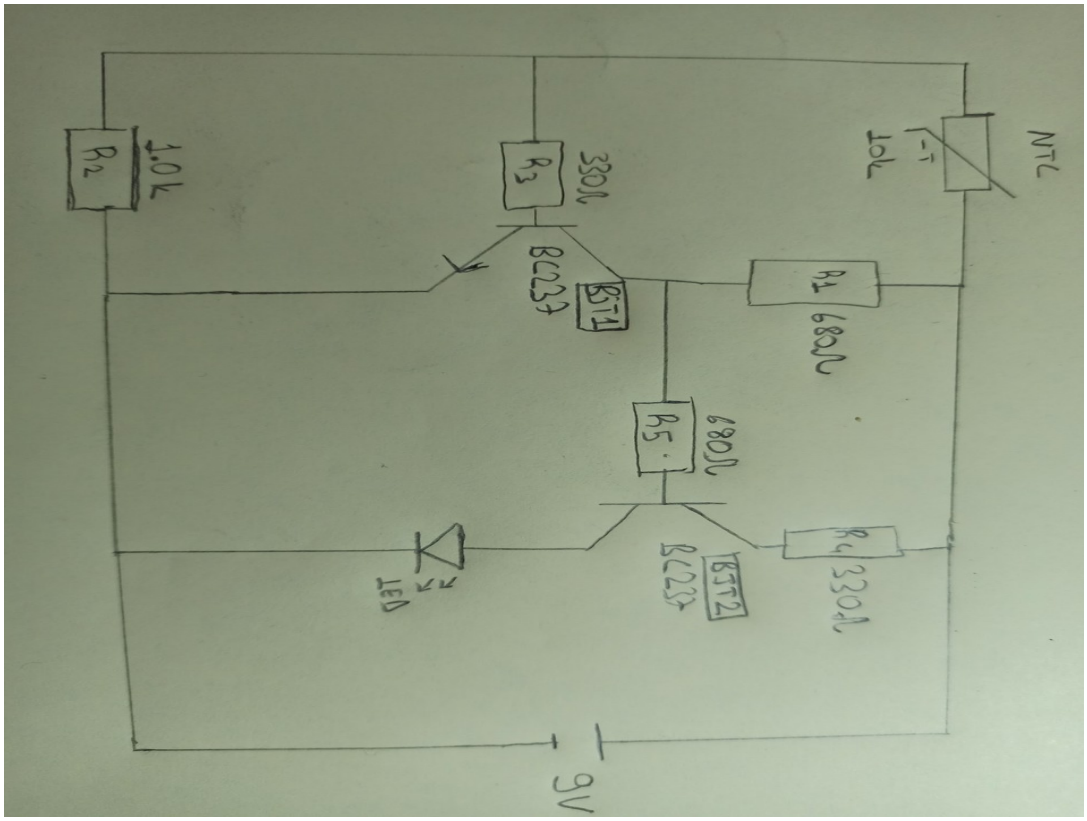

3 Calculations

R2 (1KΩ)

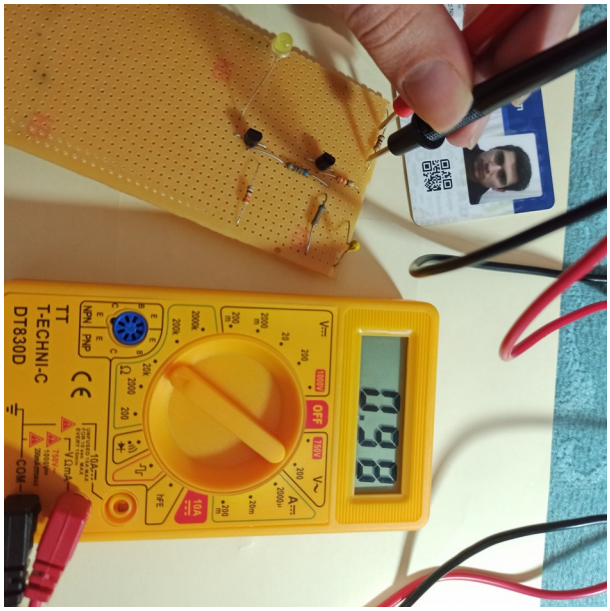

NTC (10KΩ)

Project #	LIGHT CIRCUIT RUNNING IN THE COLD WITH NTC		
	#	Student Name and Surname	Student ID
HW #	1	ÖMER FARUK ORUÇ	G190100063

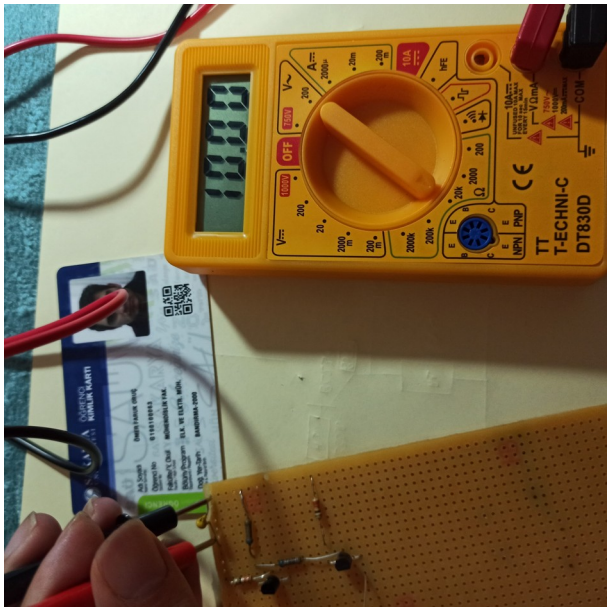

R1 (680Ω)

R4(330Ω)

R3(330Ω)

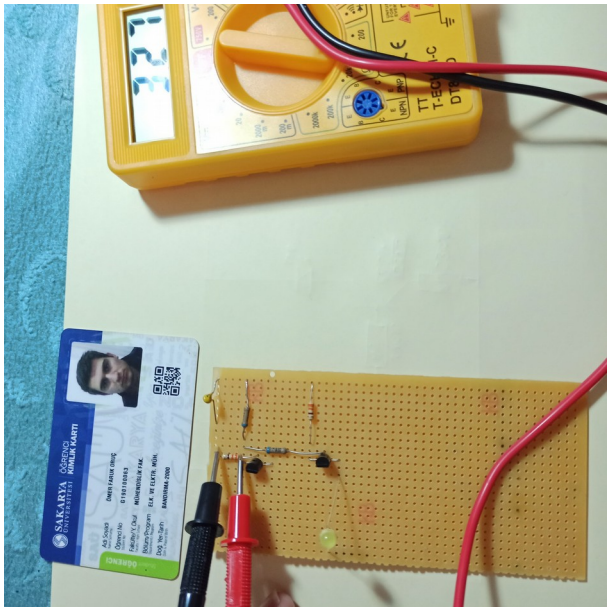

R5(680Ω)

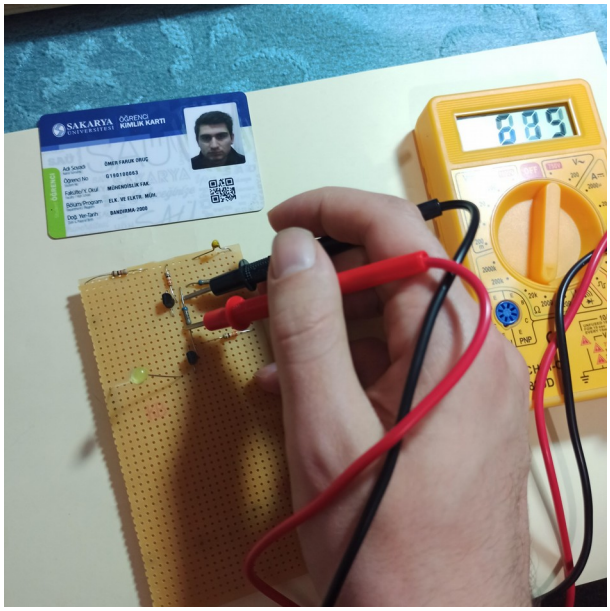

BATTERY(9V)

4 Simulations

According to the simulation results, the circuit gives light below 23 ° C minimum. But between 23 ° C and 20 ° C the circuit only gives light for a short time. At all values of 20 ° C and below, the circuit works properly and gives light continuously.

Project #	LIGHT CIRCUIT RUNNING IN THE COLD WITH NTC		
	#	Student Name and Surname	Student ID
HW #	1	ÖMER FARUK ORUÇ	G190100063

By looking at Picture 1 and 2, you can see that the circuit is burning for a short time only. In the third picture, it can be examined that the light is constantly on without any problem.

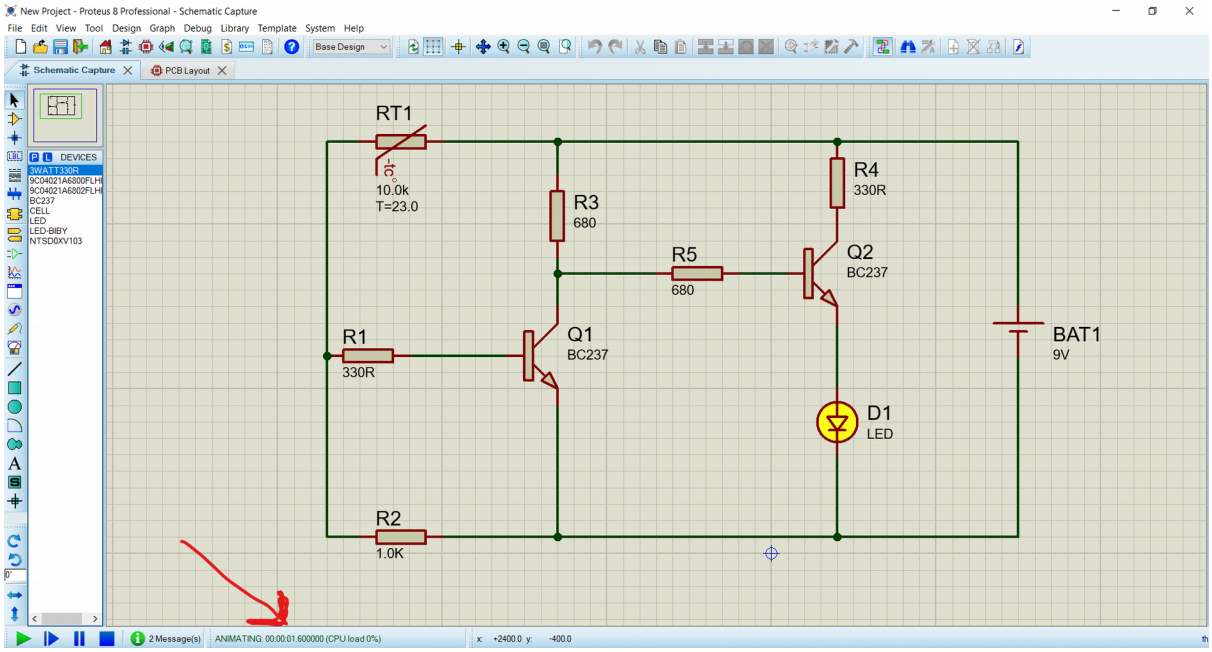

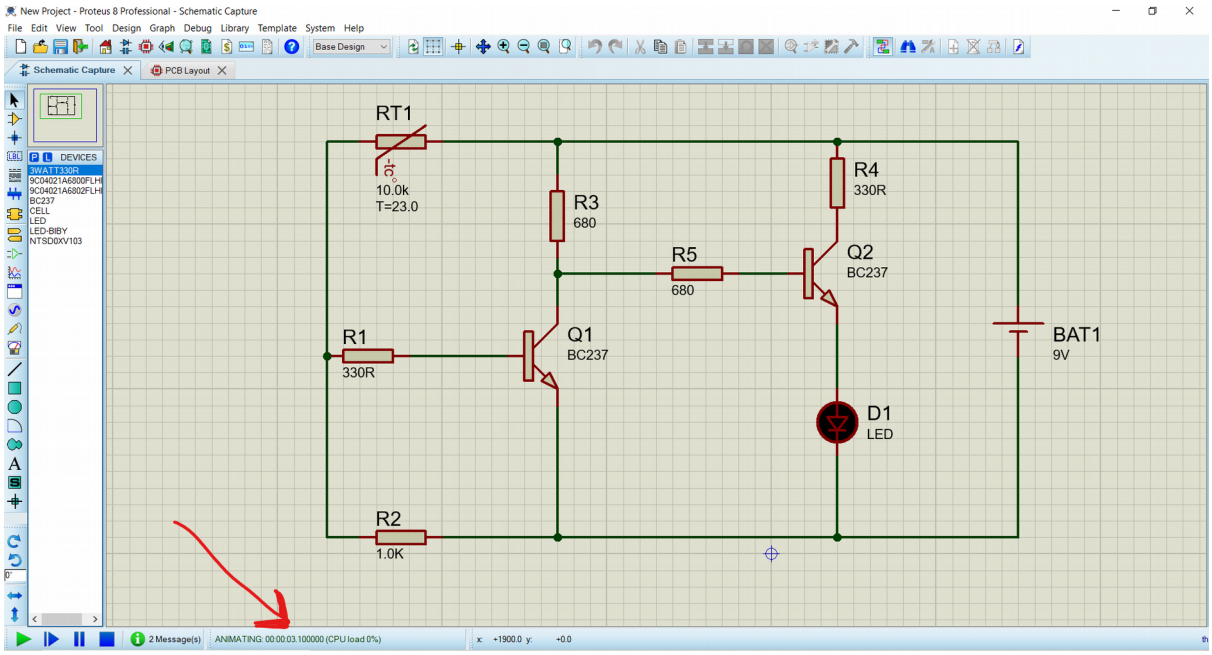

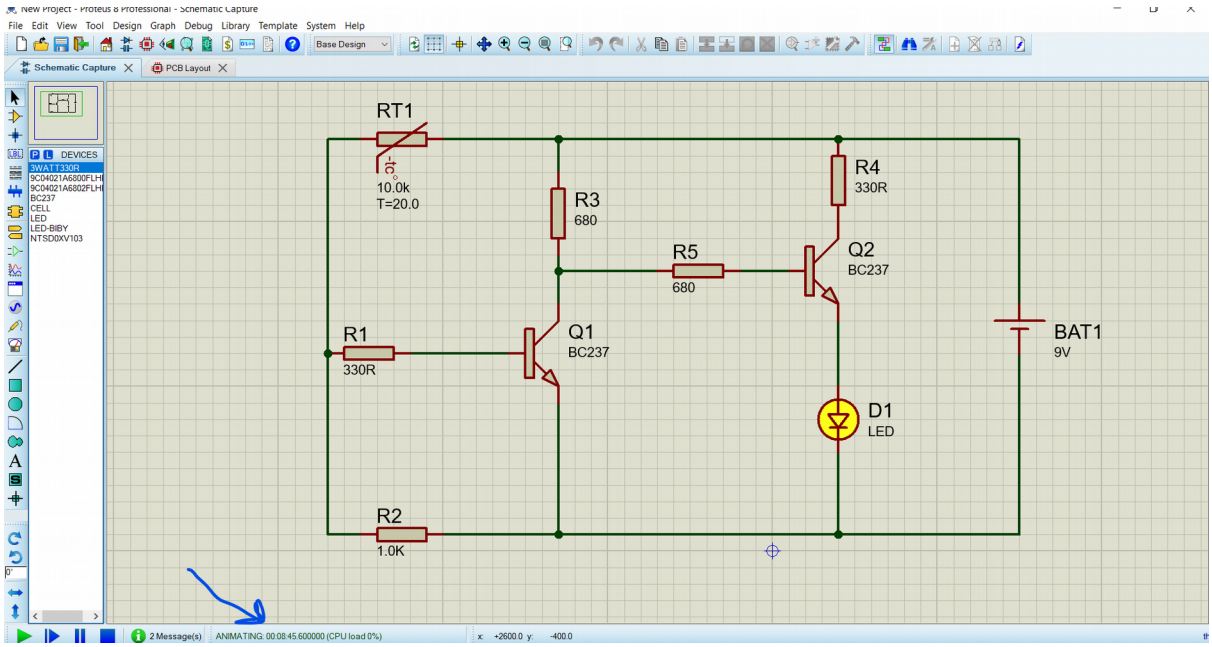

5 Implementation Of The Circuit As A Whole Product

I showed the operability of the circuit through the photos. The first photo was taken when the room temperature was about 24 ° C and in this case the LED light was not lit. Later, after waiting for a very short time in the freezer with a temperature of 19 ° C, as seen in the second photo, the LED started to light.

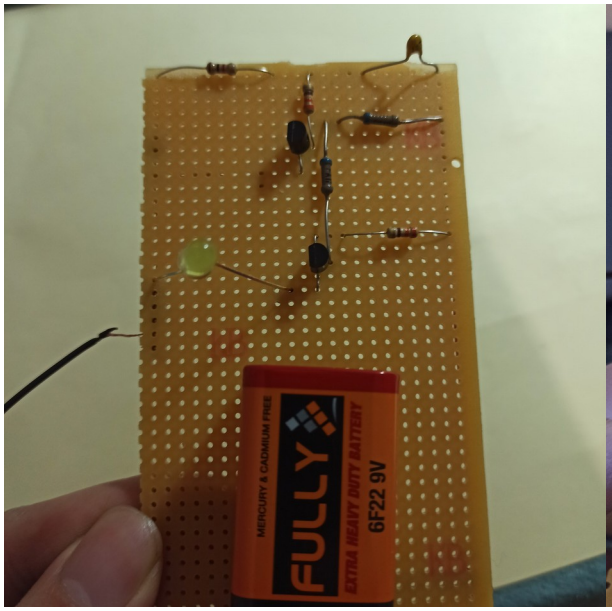

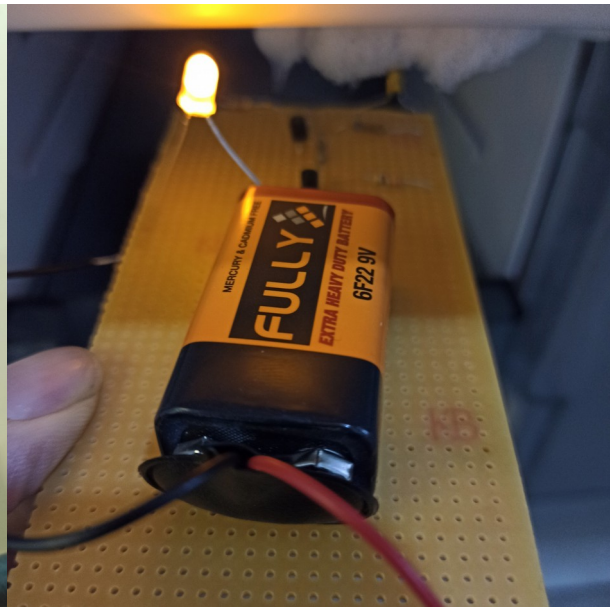

6 Measurements Of Electrical Parameters (With Real And Simulation Values) And Conclusions

A Measure 1

The results of the R3 and R5 values are measured at approximately 24 ° C room temperature and simulation conditions. 1st Photo is R3 value, 2nd photo is R5 value, and the last photo is the simulation value of both values.

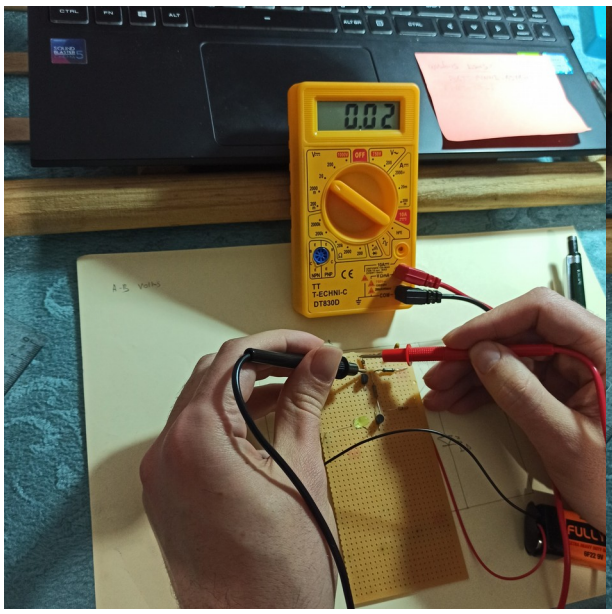

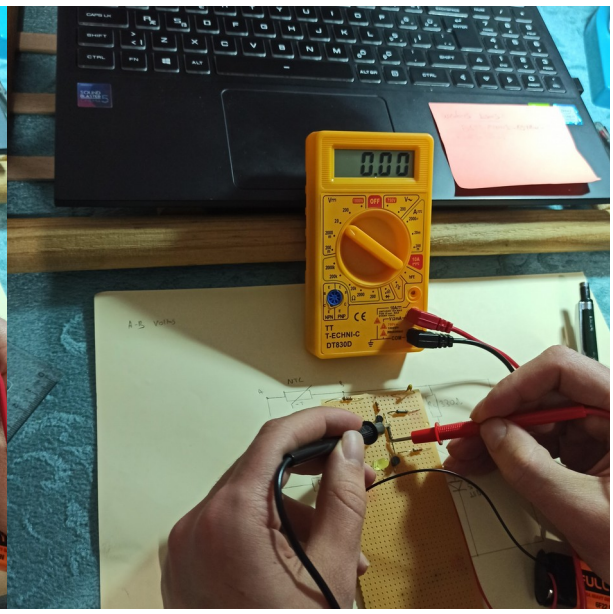

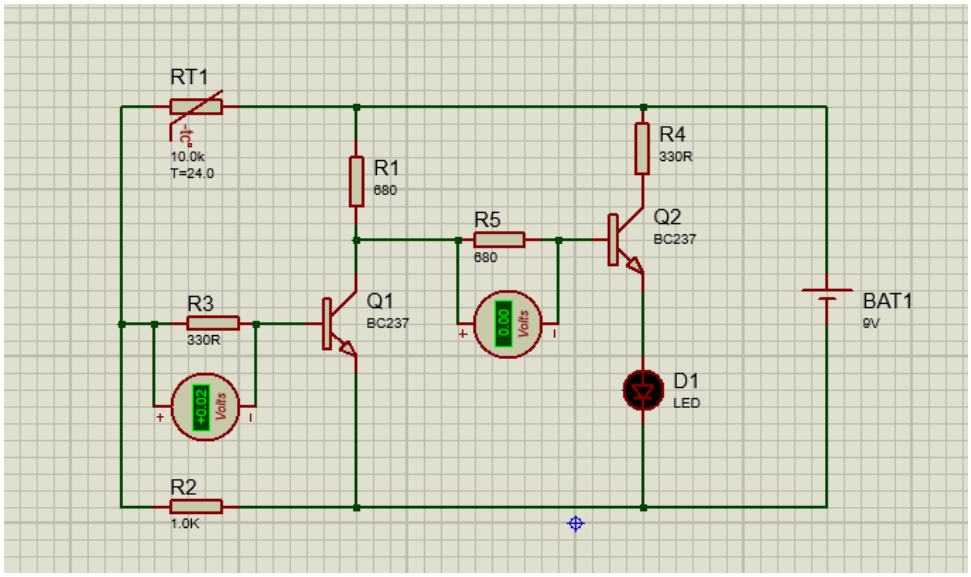

B- Measure 2

This calculation was made to calculate the Voltage value of NTC at 24 ° C. The reason for the difference here is that the approximate tolerance value of the NTC and the volt value of the battery is not exactly 9V.

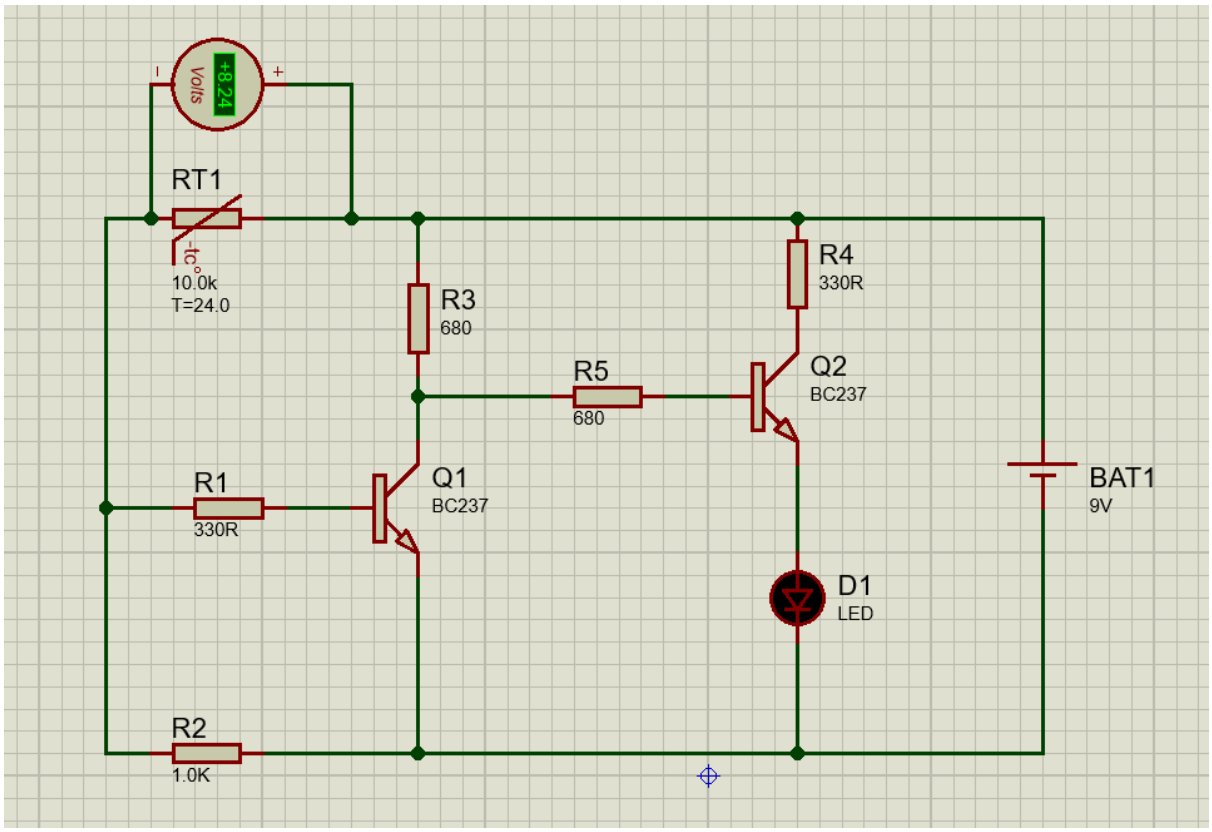

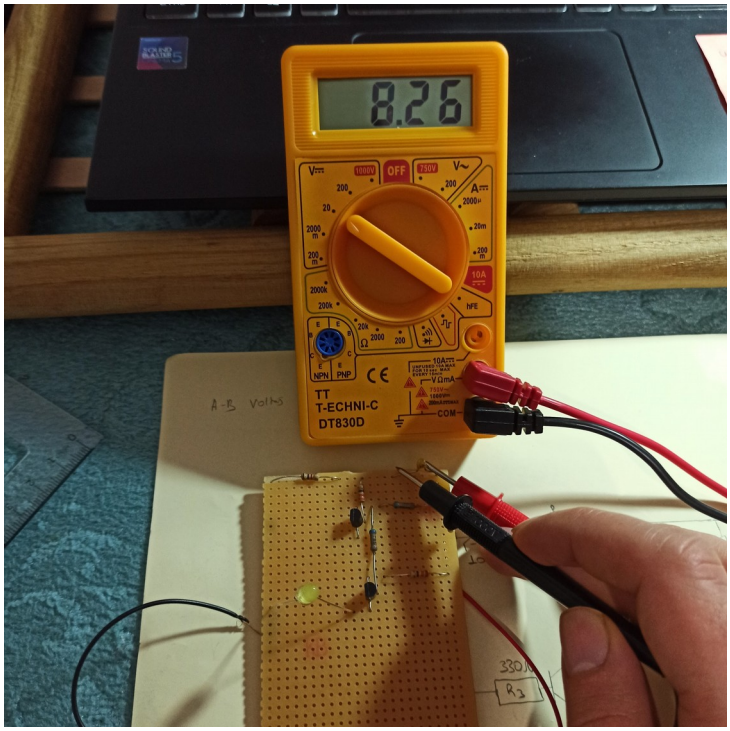

C- Measure 3

The voltage values between R4 and BJT2 are as in the photo. Again, the volt value on the LED is written. It is possible to see that the sum of these volt values is equal to the main branch current.

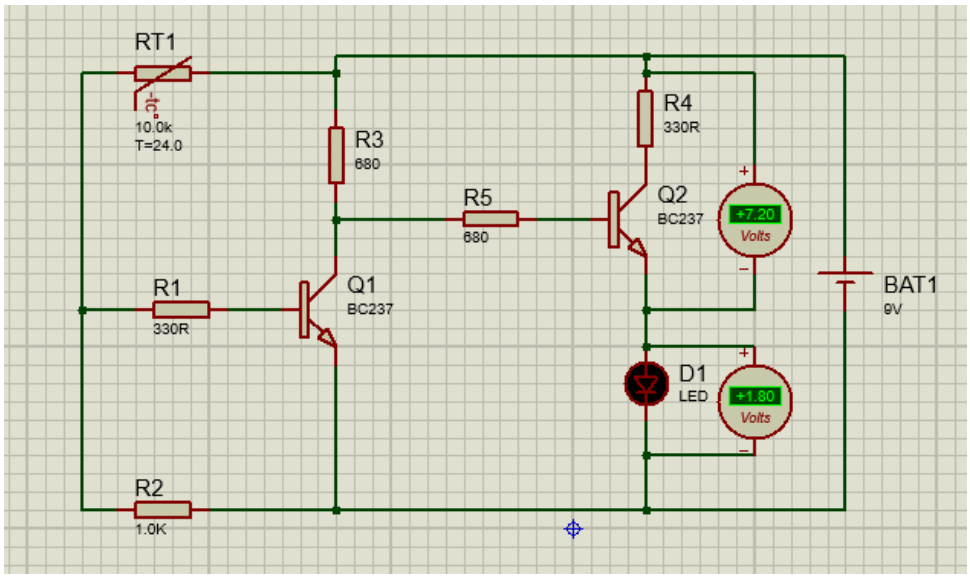

D- Measure 4

I measured R3 and R5 values in a cold environment. (Cold version of measure 1) As a result of this measurement, I have observed that the value of R3 is 0 and that the value of R5 is much higher. The reason for

this is that the resistance of the NTC increased with the increase in the coldness of the environment. For this reason, no current has passed through R3 and current has started to pass through R5. The difference of practical measurement and simulation measurement is due to the tolerance values and the voltage of the battery.

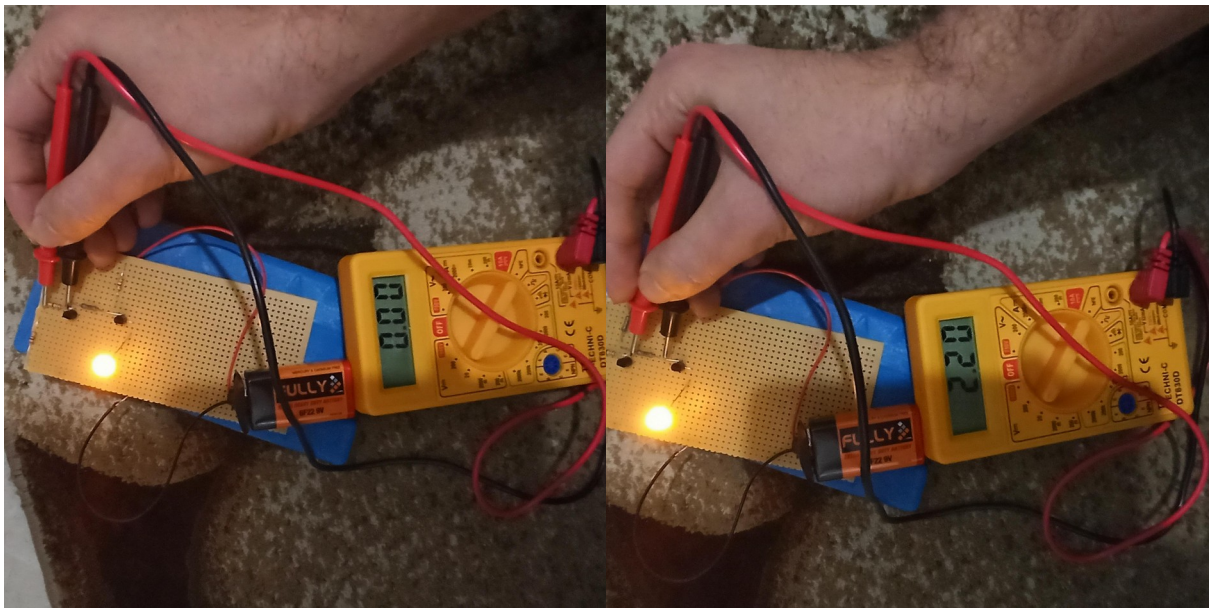

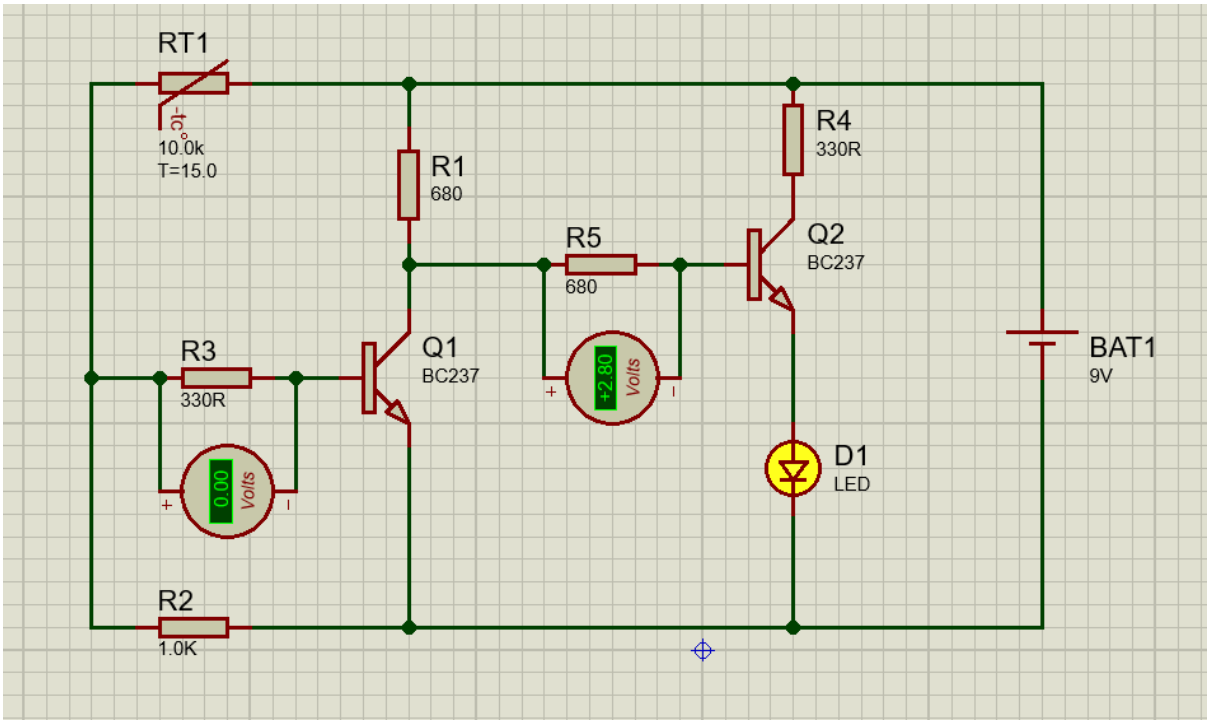

E- Measure 5

In this measurement, I observed the current passing through the main branch and the current of the Led. When the LED is inoperative, current

does not flow through it, but when the LED lights up, current flows through it. As the resistance value changes with the change of temperature, the current passing through the circuit changes. In this circuit, current values can be measured at a very small value such as milliamperes. While the 1st Circuit operates at 24 ° C, the 2nd Circuit operates at 20 ° C.

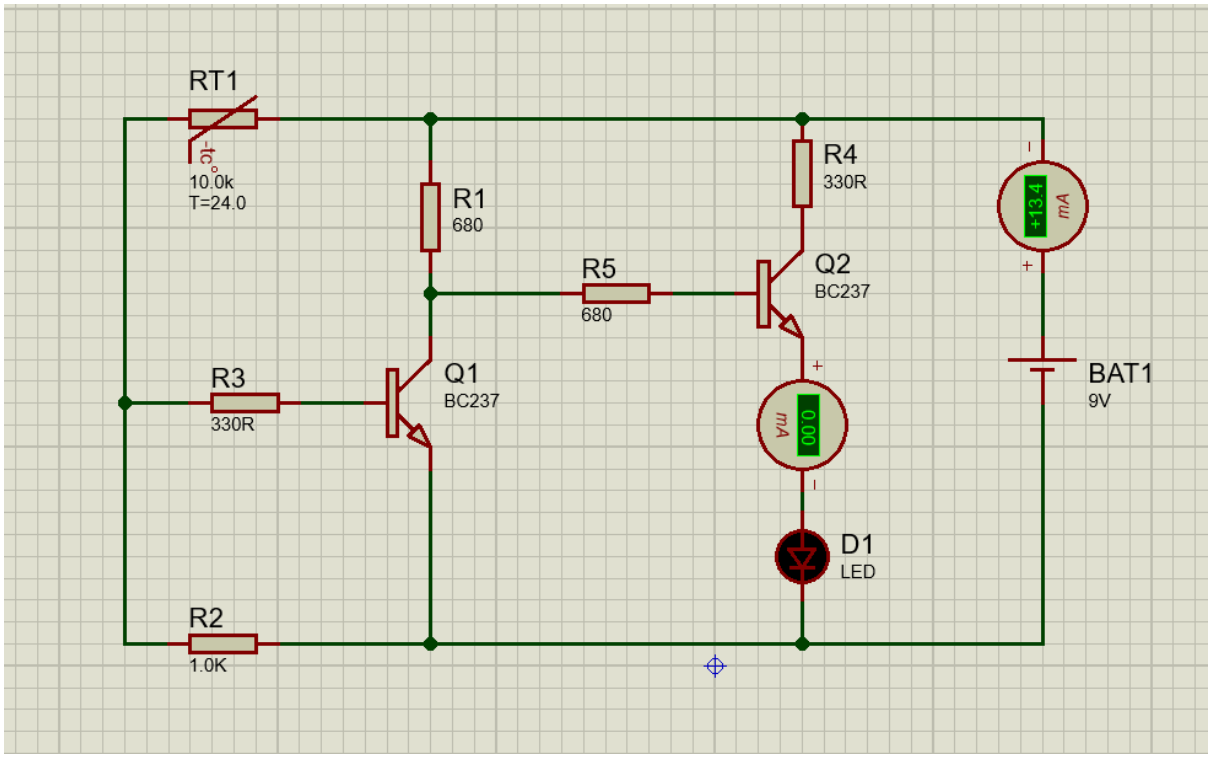

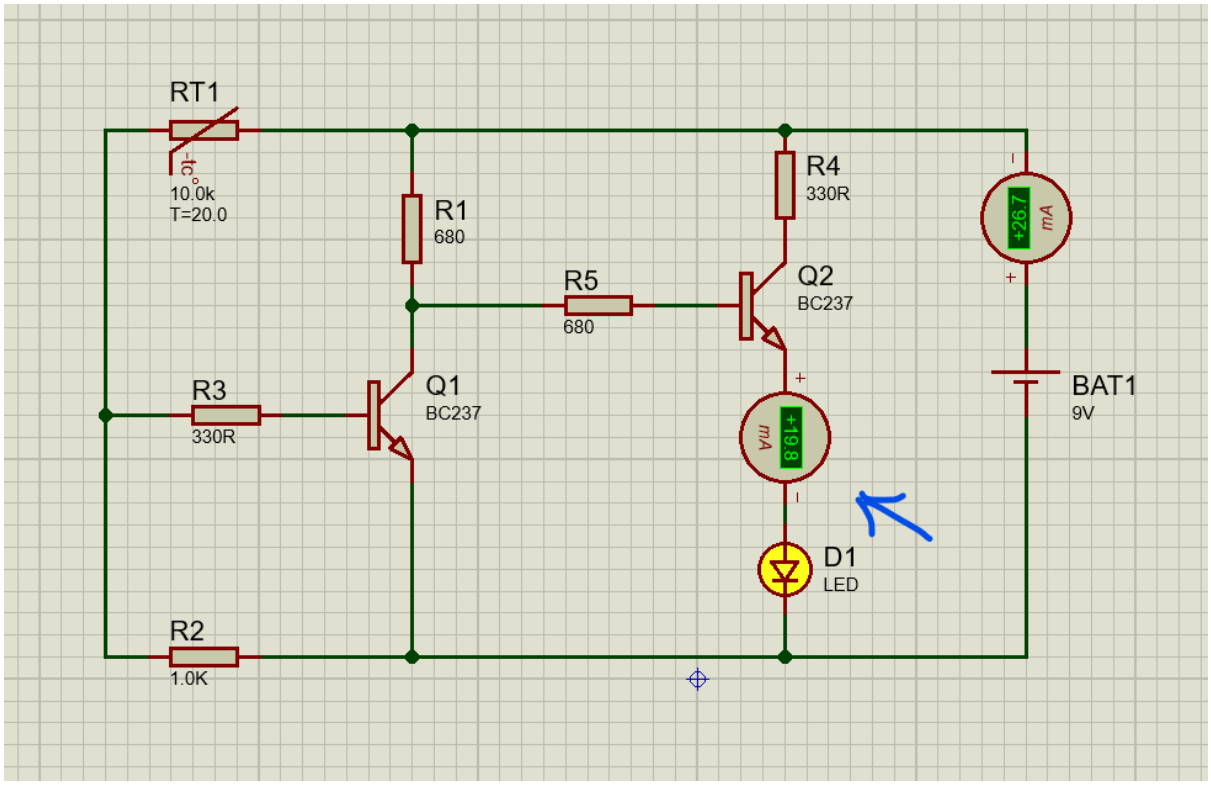

F- Energy And Power Consumption Test

In order to find the power value, we need to know the current and resistance values. Power is the amount of energy spent per unit time. The formula for power is [P = V. I]

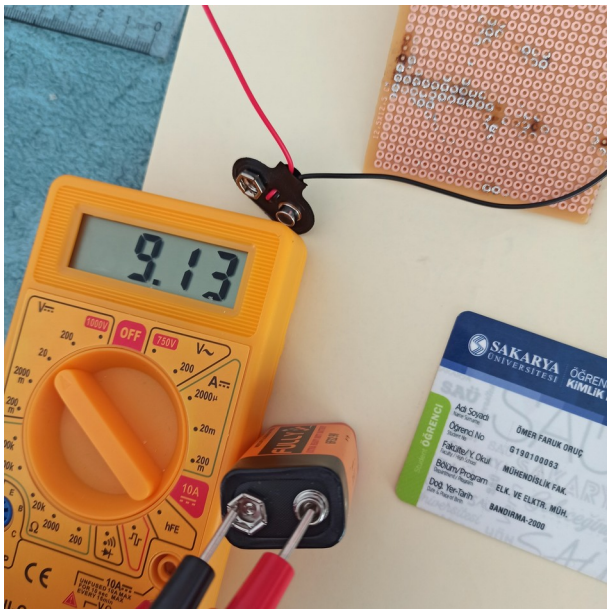

According to the last measurements ı made, we found the current value of the circuit while it was running 26.7 milliamps(0.0134 Amps). The last time I measured the voltage was 9.13 V. POWER= (0.134)(9.13)=0.122342 Watt(W)

Energy can be calculated according to the value found. It is necessary to multiply the amount of power by the time to find the amount of energy expended in just one hour. 1Hour=3600s.

E=(0.122342)(3600)=440,4312J= 4,404312KJ

G Extra Measurement

I do this measurement to better understand NTC. The purpose of this measurement is to observe the change in resistance according to the temperature values of the NTC. As seen in the first photo, the resistance value of NTC at room temperature is 10KΩ.

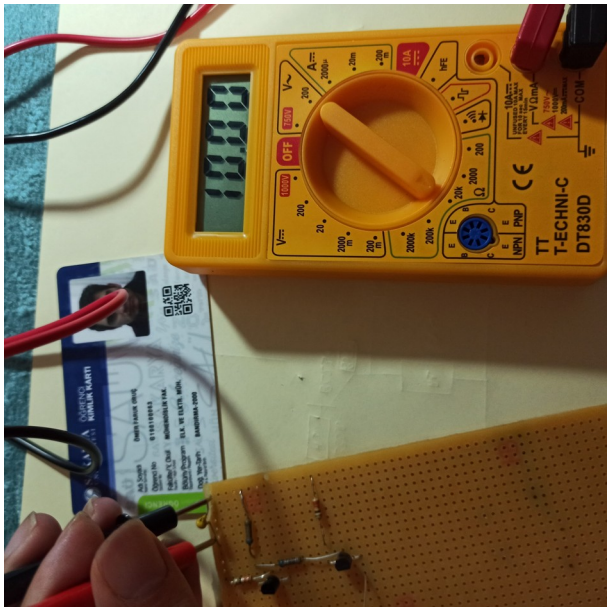

After keeping it in the freezer for a while, the resistance value of NTC has grown to 26.8KΩ as seen.

Finally, ı put it on the heater and observe the resistance value of NTC as 7.25KΩ.

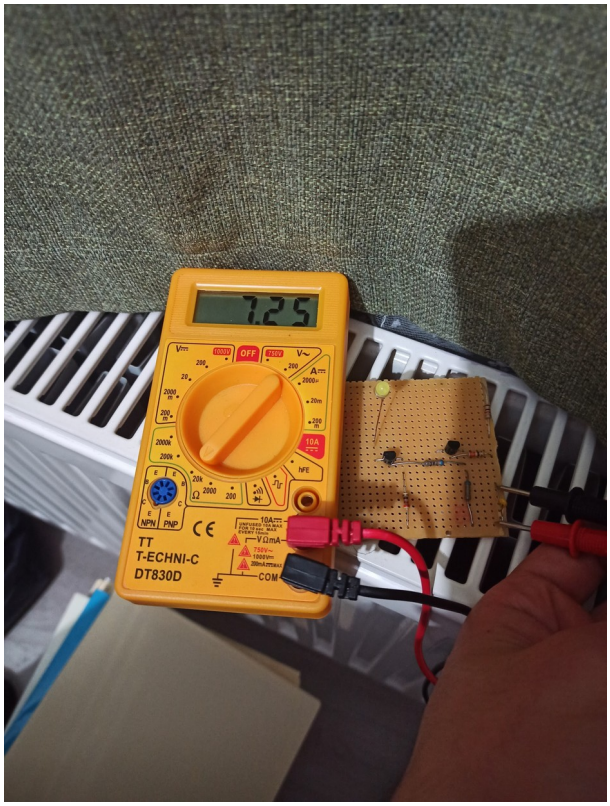

NTC temperature thermistors have a negative electrical resistance to temperature (R / T) relationship. As a result, while the resistance value of NTC decreases as a result of increasing temperature, it increases as a result of decreasing temperature.

The measurement of these values is offered to the buyers by the production factory with much more precise measuring instruments. The values of the NTC I use are as follows.

$R_{(25℃)}$=10.00kΩ $B_{(25℃/50℃)}$=3950.00K

T(℃)	R(KΩ)	T(℃)	R(KΩ)	T(℃)	R(KΩ)	T(℃)	R(KΩ)
-40.0	336.60	1.0	31.040	42.0	4.9180	83.0	1.1410
-39.0	315.00	2.0	29.500	43.0	4.7260	84.0	1.1050
-38.0	295.00	3.0	28.060	44.0	4.5440	85.0	1.0710
-37.0	276.40	4.0	26.680	45.0	4.3680	86.0	1.0380
-36.0	259.00	5.0	25.400	46.0	4.2020	87.0	1.0060
-35.0	242.80	6.0	24.180	47.0	4.0420	88.0	0.9750
-34.0	227.80	7.0	23.020	48.0	3.8880	89.0	0.9450
-33.0	213.80	8.0	21.920	49.0	3.7420	90.0	0.9160
-32.0	200.60	9.0	20.880	50.0	3.6020	91.0	0.8880
-31.0	188.40	10.0	19.900	51.0	3.4680	92.0	0.8620
-30.0	177.00	11.0	18.970	52.0	3.3400	93.0	0.8360
-29.0	166.40	12.0	18.290	53.0	3.2160	94.0	0.8110
-28.0	156.60	13.0	17.260	54.0	3.0980	95.0	0.7870
-27.0	147.20	14.0	16.460	55.0	2.9860	96.0	0.7640
-26.0	138.50	15.0	15.710	56.0	2.8780	97.0	0.7410
-25.0	130.40	16.0	15.000	57.0	2.7740	98.0	0.7200
-24.0	122.90	17.0	14.320	58.0	2.6740	99.0	0.6990
-23.0	115.80	18.0	13.680	59.0	2.5800	100.0	0.6790
-22.0	109.10	19.0	13.070	60.0	2.4880	101.0	0.6590
-21.0	102.90	20.0	12.490	61.0	2.4000	102.0	0.6400
-20.0	97.120	21.0	11.940	62.0	2.3160	103.0	0.6220
-19.0	91.660	22.0	11.420	63.0	2.2340	104.0	0.6050
-18.0	86.540	23.0	10.920	64.0	2.1580	105.0	0.5880
-17.0	81.720	24.0	10.450	65.0	2.0820	106.0	0.5714
-16.0	77.220	25.0	10.000	66.0	2.0120	107.0	0.5556
-15.0	72.980	26.0	9.5740	67.0	1.9420	108.0	0.5402
-14.0	69.000	27.0	9.1660	68.0	1.8760	109.0	0.5252
-13.0	65.260	28.0	8.7780	69.0	1.8130	110.0	0.5108
-12.0	61.760	29.0	8.4800	70.0	1.7510	111.0	0.4968
-11.0	58.460	30.0	8.0580	71.0	1.6930	112.0	0.4832
-10.0	55.340	31.0	7.7240	72.0	1.6370	113.0	0.4702
-9.0	52.420	32.0	7.4040	73.0	1.5820	114.0	0.4574
-8.0	49.660	33.0	7.0980	74.0	1.5300	115.0	0.4452
-7.0	47.080	34.0	6.8080	75.0	1.4800	116.0	0.4334
-6.0	44.640	35.0	6.5320	76.0	1.4320	117.0	0.4218
-5.0	42.340	36.0	6.2680	77.0	1.3850	118.0	0.4106
-4.0	40.160	37.0	6.0150	78.0	1.3410	119.0	0.3998
-3.0	38.120	38.0	5.7760	79.0	1.2980	120.0	0.3894
-2.0	36.200	39.0	5.5460	80.0	1.2560		
-1.0	34.380	40.0	5.3260	81.0	1.2150		
0.0	32.660	41.0	5.1180	82.0	1.1750		

东莞市星阳电子科技有限公司

An example NTC Thermistor characteristic curves are as follows.

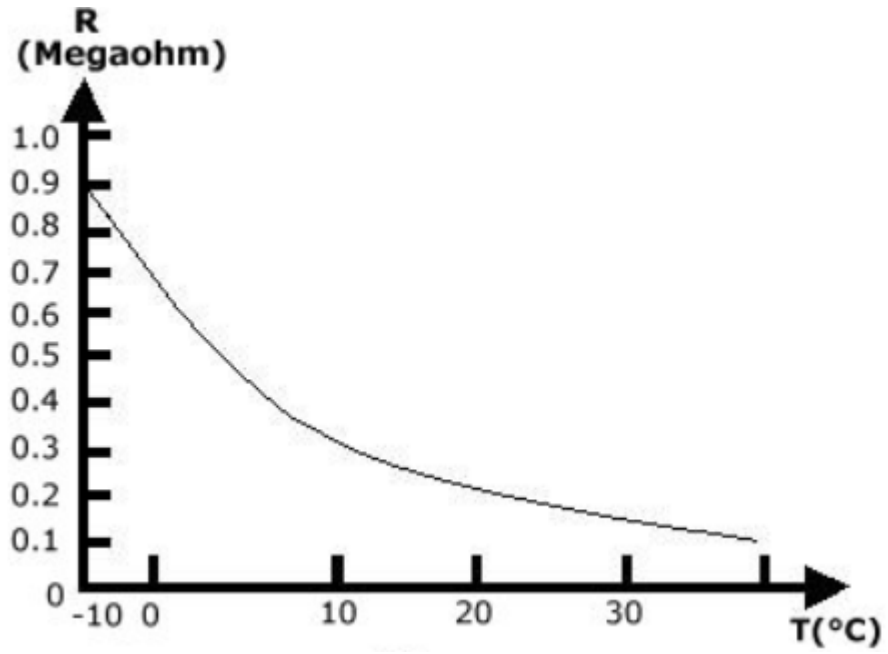

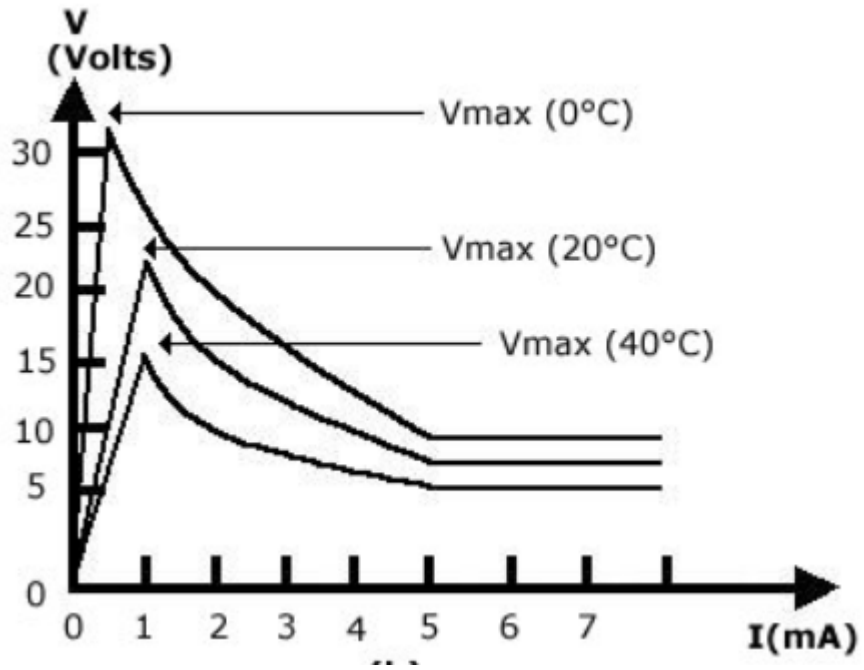

7 Conclusion

The circuit has been successfully done with great care, both in simulation and implementation. This circuit is designed as a circuit suitable for use in many areas such as coolers, air conditioners and freezers. There have been differences during measurement due to the imbalance of the resistance values and the voltage value of the battery. Although it is observed that there are simple differences between practical and theoretical, it is obvious that these differences do not cause problems during the usage phase.

8 Gains

⇒ For the first time, I measured with a multimeter and learned how to measure it.

⇒ I learned to use solder for the first time.

⇒ For the first time I learned the logic of making a comprehensive circuit and working.

⇒ I learned to deal with and find solutions to problems that arose during my work.

⇒ I learned PCB circuit making and how to use perforated plate and breadboards.

⇒ I learned the working logic of programs like Proteus

⇒ I learned a lot of information such as electrical and electronics sales places in the place where I live and expanded my network.

9 References

9.1 Main Reference(s)

[1] http://tristorders.blogspot.com/2011/12/isi-alarm-devresi-sogukta-calisan-devre.html

[2] https://320volt.com/ntc-termistor-devreleri/

9.2 Other Reference(s)

[1] http://www.derstagram.com/termistor-nedir-nasil-calisir/

[2] https://www.kontrolkalemi.com/forum/konu/kombi-icin-ntc-sens%C3%B6r.109742/

[3] https://diyot.net/ntc/#:~:text=NTC%20

[4]https://www.youtube.com/watch?v=R9tGGKUuN30&ab_channel=ELEKTR%C4%B0KDERSLER%C4%B0

[5]https://www.youtube.com/watch?v=iunn9iqk81w&t=21s&ab_channel=ElektrikElektronikUygulamalar%C4%B1

[6]https://www.youtube.com/watch?v=bUGWe6M3l3s&t=340s&ab_channel=AhmetErbo%C4%9Fa

[7] https://www.youtube.com/watch?v=-OIrIIYpbZg&ab_channel=ZAFERYILDIZ

[8]https://www.youtube.com/watch?v=zb2NJUpZoGU&list=LL&index=7&t=2s&ab_channel=ElektrikElektronikTemrinler

[9]https://www.youtube.com/watch?v=Swjb0SoGoY&list=LL&index=11&ab_channel=ElektronikDerslerim

PROJECT VIDEO

https://wetransfer.com/downloads/e8f47370f6532119d23c6183479467152020122823034 5/37098a1c0fb21d61fe15300dce21988820201228230345/7148fa