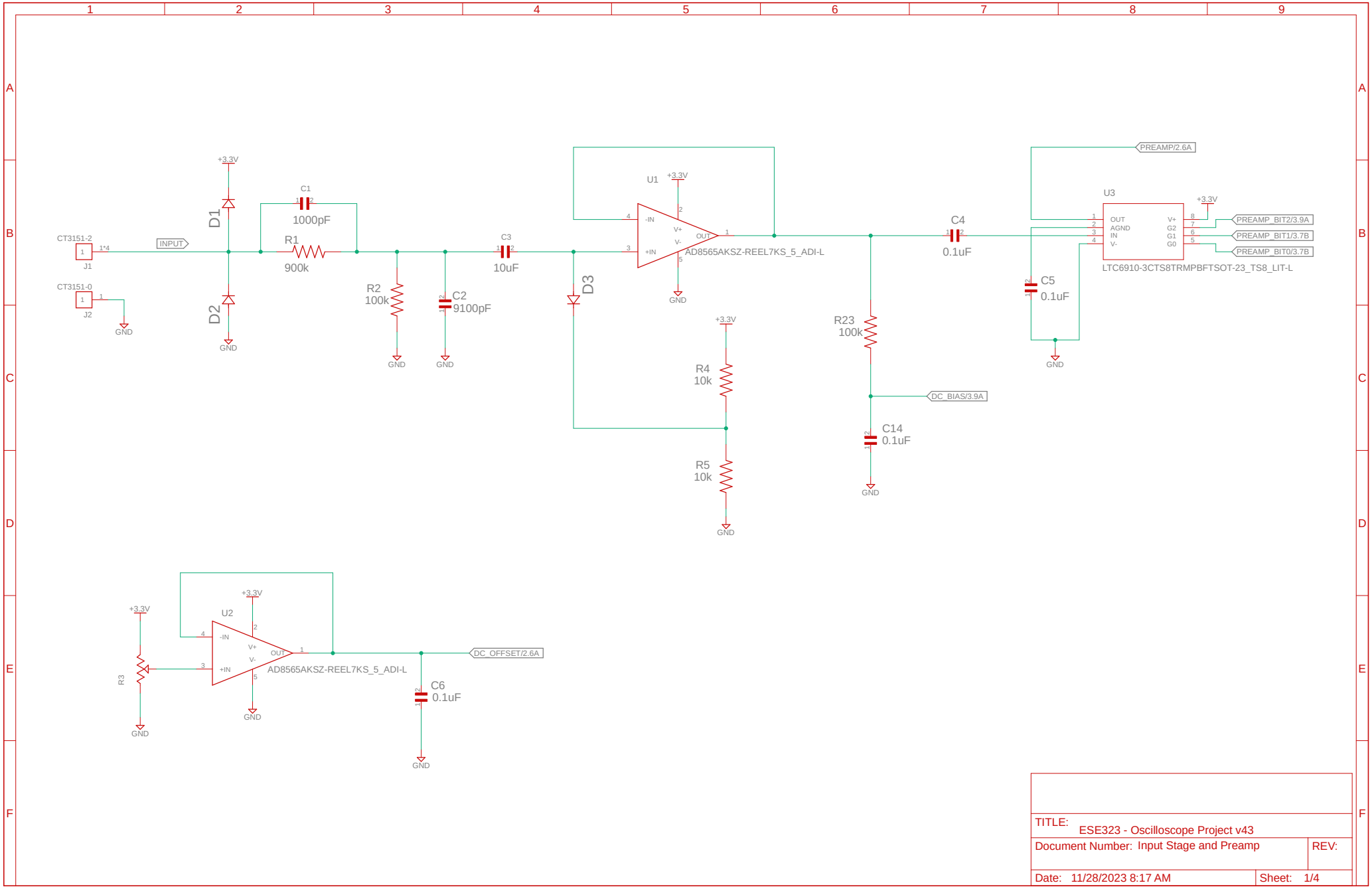

TITLE: ESE323 - Oscilloscope Project v43

Document Number: Input Stage and Preamp

REV:

Date: 11/28/2023 8:17 AM

Sheet: 1/4

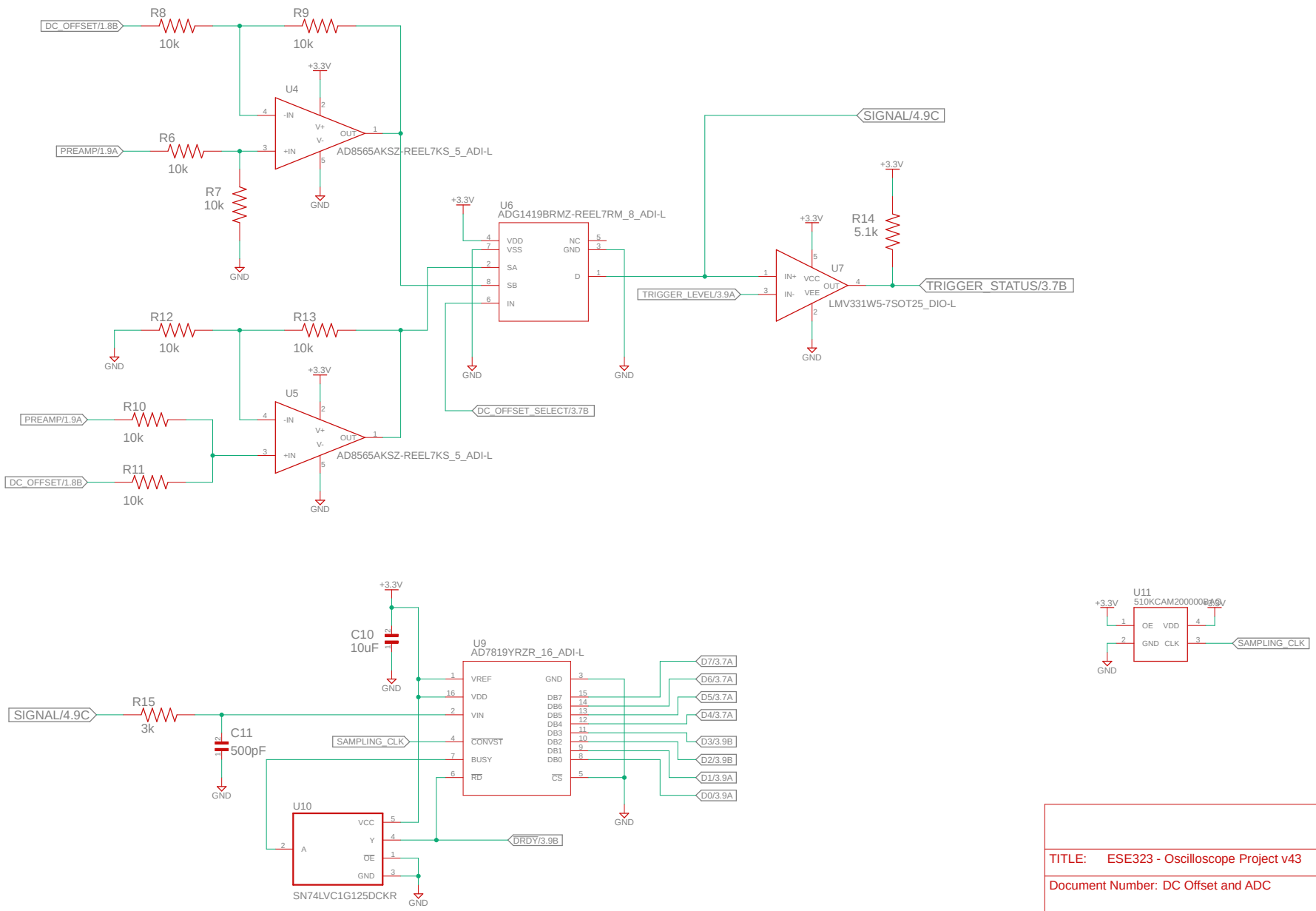
DC_OFFSET/1.8B
R8
10k
R9
10k
+3.3V
U4
-IN
V+
OUT
+IN
V-
AD8565AKSZ-REEL7KS_5_ADI-L
PREAMP/1.9A
R6
10k
R7
10k
GND
SIGNAL/4.9C
U6
ADG1419BRMZ-REEL7RM_8_ADI-L
VDD
VSS
SA
SB
IN
NC
GND
D
TRIGGER_LEVEL/3.9A
U7
IN+
IN-
VCC
VEE
OUT
LMV331W5-7SOT25_DIO-L
R14
5.1k
TRIGGER_STATUS/3.7B
R12
10k
R13
10k
U5
R10
10k
R11
10k
DC_OFFSET_SELECT/3.7B
C10
10uF
U9
AD7819YRZR_16_ADI-L
VREF
VDD
VIN
CONVST
BUSY
RD
DB7
DB6
DB5
DB4
DB3
DB2
DB1
DB0
CS
D7/3.7A
D6/3.7A
D5/3.7A
D4/3.7A
D3/3.9B
D2/3.9B
D1/3.9A
D0/3.9A
R15
3k
C11
500pF
SAMPLING_CLK
U10
VCC
A
Y
OE
SN74LVC1G125DCKR
DRDY/3.9B
U11
510KCAM200000BAG
OE
VDD
CLK
TITLE: ESE323 - Oscilloscope Project v43
Document Number: DC Offset and ADC
REV:
Date: 11/28/2023 8:17 AM
Sheet: 2/4

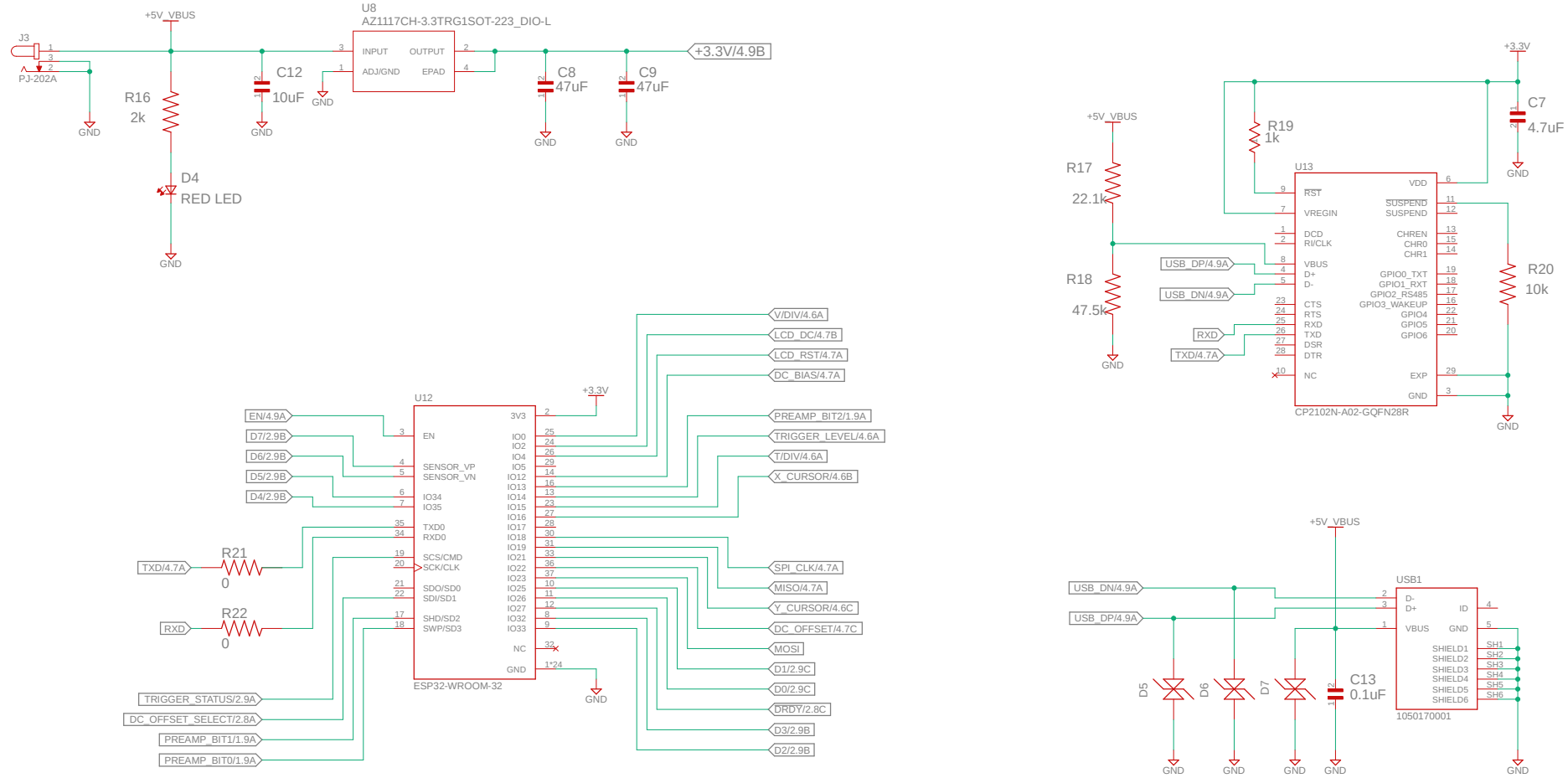

TITLE: ESE323 - Oscilloscope Project v43	
Document Number: Microcontroller, USB to UART Bridge, and Power Supply	REV:
Date: 11/28/2023 8:17 AM	Sheet: 3/4

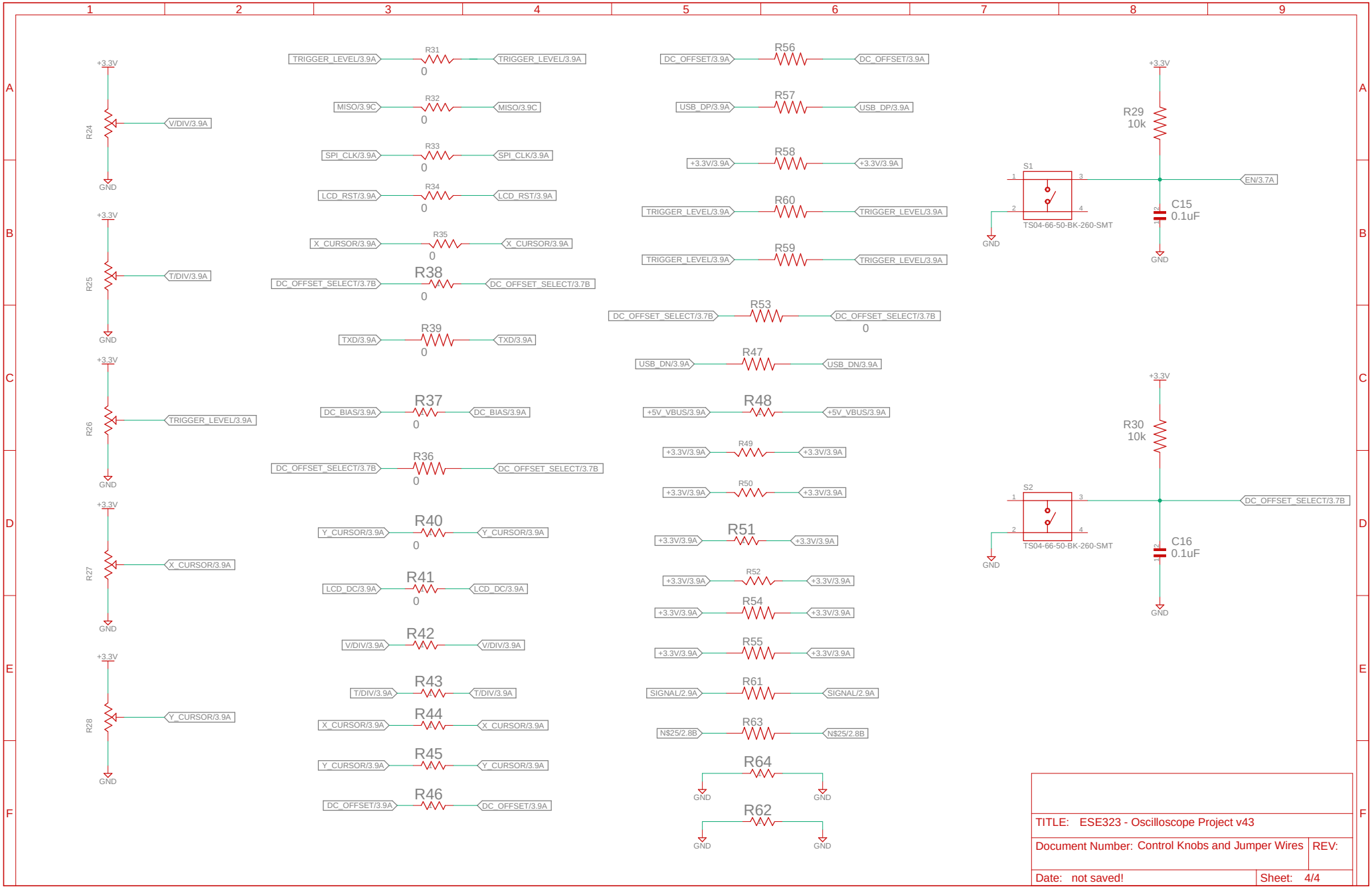

11/28/2023 8:21 AM f=0.63 (Sheet: 4/4)