1) Blink Light

Aim:

To create a Blink LED using Arduino uno board in Tinker cad

Requirements:

- 1x Arduino uno board
- 1x LED
- 1x Resistor
- Jumper Wires

Procedure:

Step 1: Take a Arduino uno board and place it in the workspace.

Step 2: Take a led bulb and resistor and place it above the Arduino uno board.

Step 3: Connect the cathode of led bulb to GND(Ground) of Arduino uno board using jumper wires.

Step 4: Connect the anode of the led bulb to Terminal 2 of resistor.

Step 5: Connect the terminal 1 of resistor to one of the digital inputs.

Step 6: Write the code and start simulation.

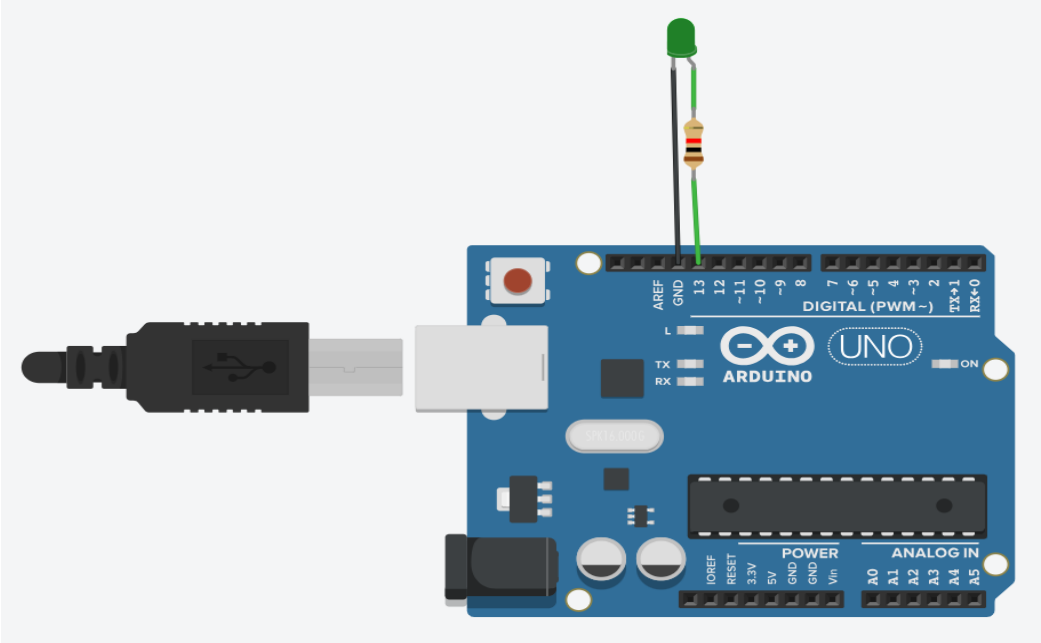

Code:

on start
set pin 13 to HIGH
forever
set pin 13 to HIGH
wait 1 secs
set pin 13 to LOW
wait 1 secs

2) Traffic Light

Aim:

To create Traffic Light using Arduino uno board in Tinker cad

Requirements:

- 1x Arduino uno board
- 3x LED
- 3x Resistor
- Jumper Wires

Procedure:

Step 1: Take a Arduino uno board and place it in the workspace.

Step 2: Take 3 led bulbs and 3 resistors and place it above the Arduino uno board.

Step 3: Connect the cathode of 3 led bulbs to GND(Ground) of Arduino uno board using jumper wires.

Step 4: Connect the anode of the led to Terminal 2 of resistor.

Step 5: Connect the terminal 1 of resistor to one of the digital inputs.

Step 6: Repeat step 4,5 for the other 2 leds.

Step 7: Write the code and start simulation.

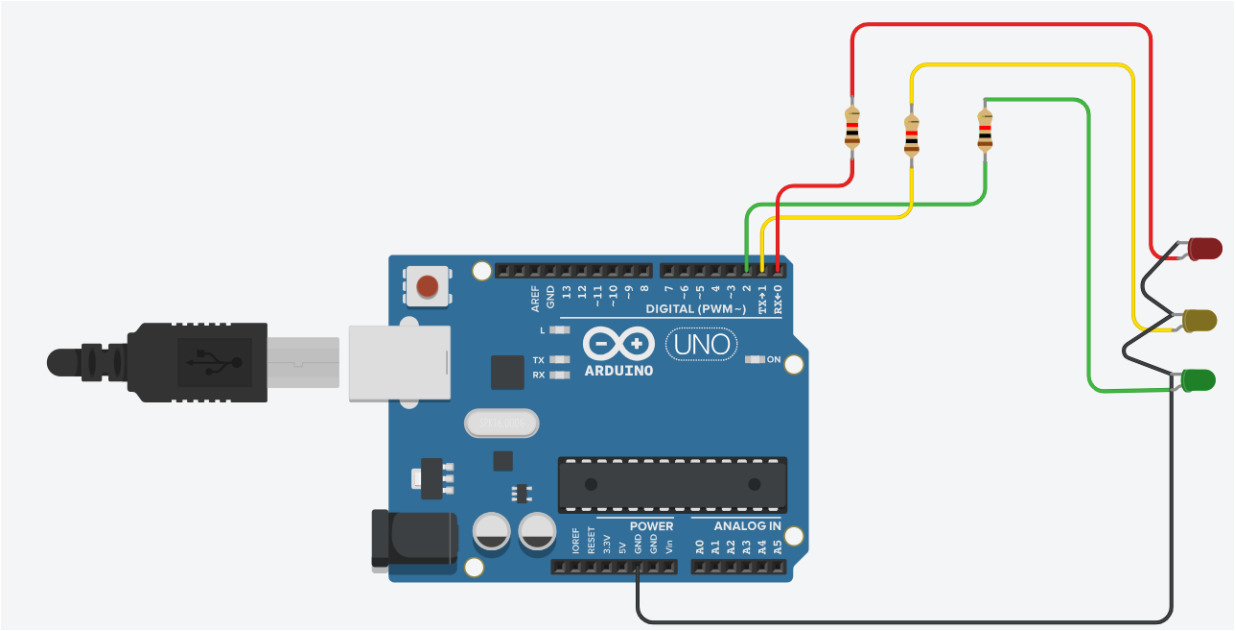

Code:

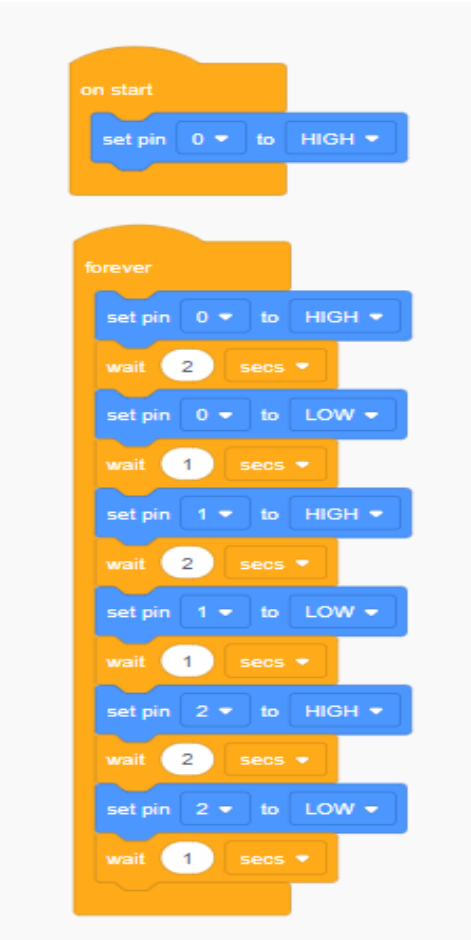
on start
set pin 0 to HIGH
forever
set pin 0 to HIGH
wait 2 secs
set pin 0 to LOW
wait 1 secs
set pin 1 to HIGH
wait 2 secs
set pin 1 to LOW
wait 1 secs
set pin 2 to HIGH
wait 2 secs
set pin 2 to LOW
wait 1 secs

3) Automatic Door

Aim

To create Automatic door using pir sensor using Arduino uno board in Tinker cad

Requirement

- 1x Arduino uno board
- 1x PIR sensor
- 1x Micro Servo
- 1x LCD 16x2
- Jumper Wires

Procedure

Step 1: Take a Arduino uno board and place it in the workspace.

Step 2: Connect the gnd of Micro Servo and LCD display to gnd of Arduino uno board.

Step 3: Connect the gnd of PIR Sensor to gnd of LCD display.

Step 4: Connect the power of PIR Sensor and Micro Servo to VCC of LCD display

Step 5: Connect the 5v of Arduino uno board to VCC of LCD display

Step 6: Connect A4 and A5 of Arduino uno board to SDA and SLC of LCD display respectively.

Step 7: Connect signal of PIR sensor to D3 of Arduino uno board.

Step 8: Connect signal of Micro Servo to D6 of Arduino uno board.

Step 9: Write the code and start simulation.

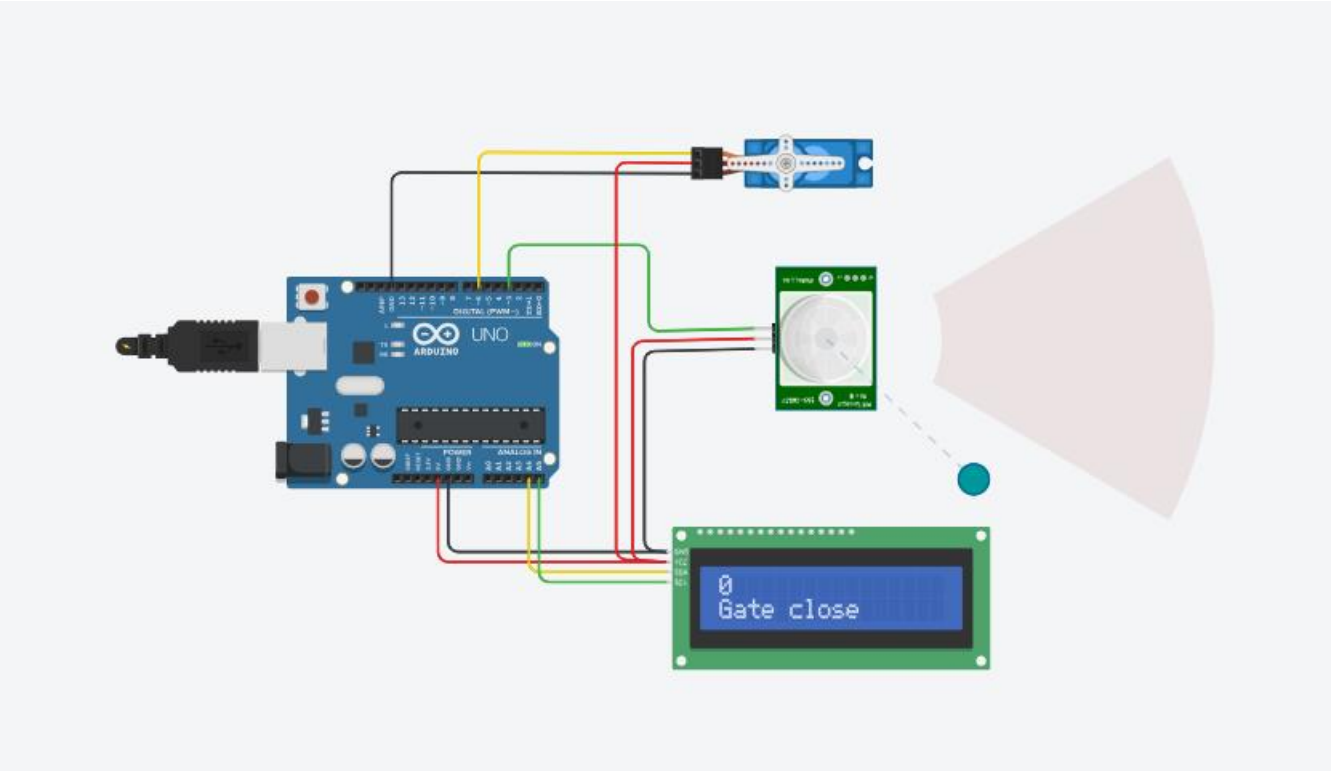

CODE:

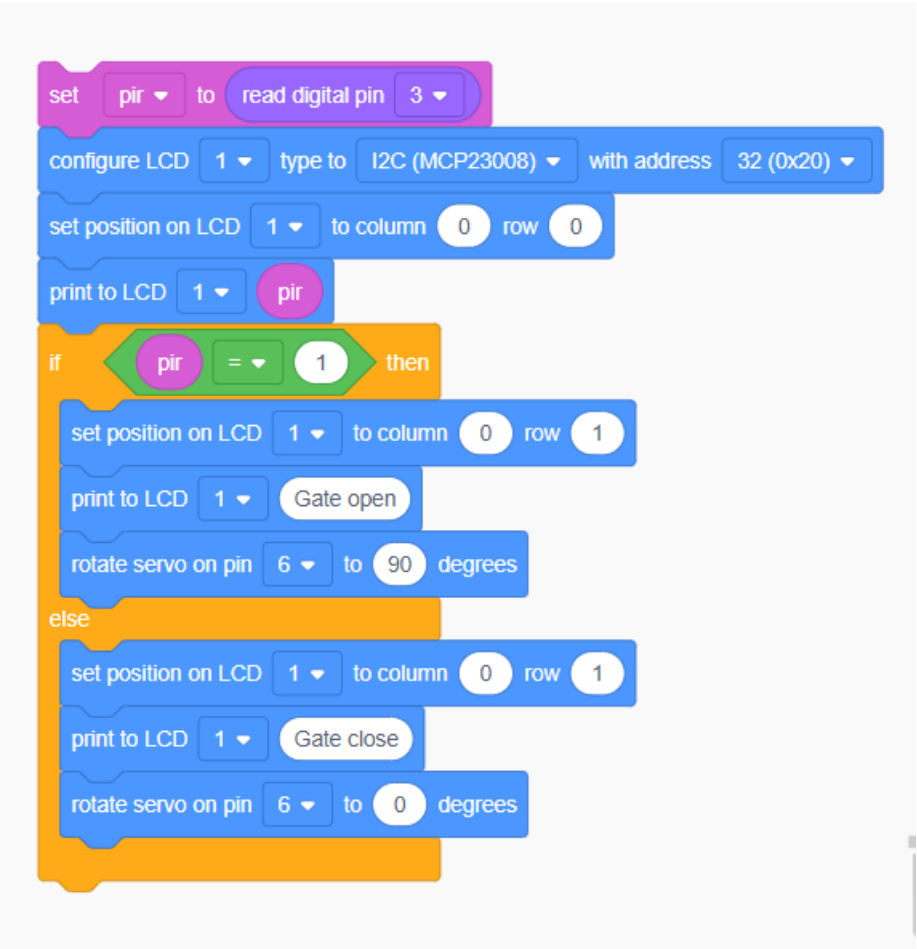
set pir to read digital pin 3
configure LCD 1 type to I2C (MCP23008) with address 32 (0x20)
set position on LCD 1 to column 0 row 0
print to LCD 1 pir
if pir = 1 then
set position on LCD 1 to column 0 row 1
print to LCD 1 Gate open
rotate servo on pin 6 to 90 degrees
else
set position on LCD 1 to column 0 row 1
print to LCD 1 Gate close
rotate servo on pin 6 to 0 degrees

4) Smoke Detector

Aim:

To create Smoke detector using Gas sensor using Arduino uno board in Tinker cad.

Requirement:

- 1x Arduino uno board
- 2x Resistor
- 1x Led
- 1x Gas sensor
- 1x Temperature sensor
- 1x piezo
- Jumper wires

Procedure:

Step 1: Take a Arduino uno board and place it in the workspace.

Step 2: Connect the terminal 2 of resistors to B2 of Gas sensor and cathode of Led

Step 3: Connect the terminal 1 of the two resistors to gnd of Arduino uno board.

Step 4: Connect H2 of gas sensor, Gnd of temperature sensor, Negative of piezo to gnd of Arduino uno board

Step 5: Connect A1,H1,A2 of gas sensor and power of temperature sensor to 5V of Arduino uno board

Step 6: Connect Vout of temperature sensor to A1 of Arduino uno board

Step 7: Connect B1 of Gas sensor to A0 of Arduino uno board.

Step 8: Connect anode of Led to D4 of Arduino uno board

Step 8: Connect Positive of piezo to D7 of Arduino uno board.

Step 9: Write the code and start simulation.

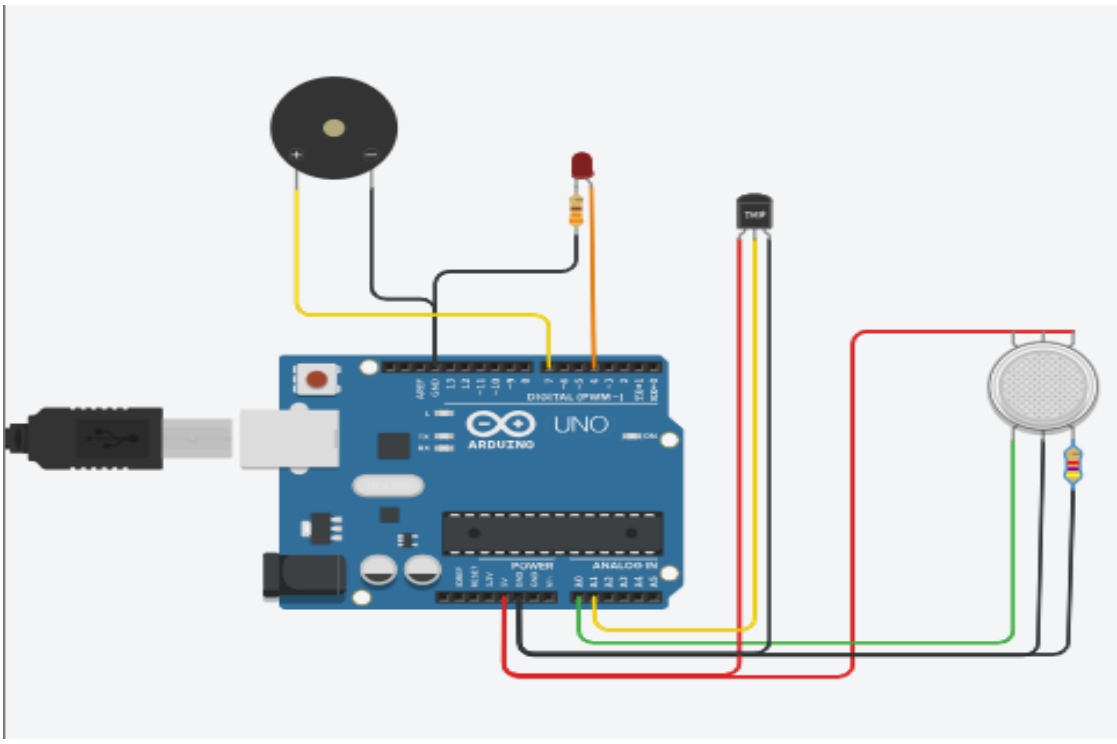

Code:

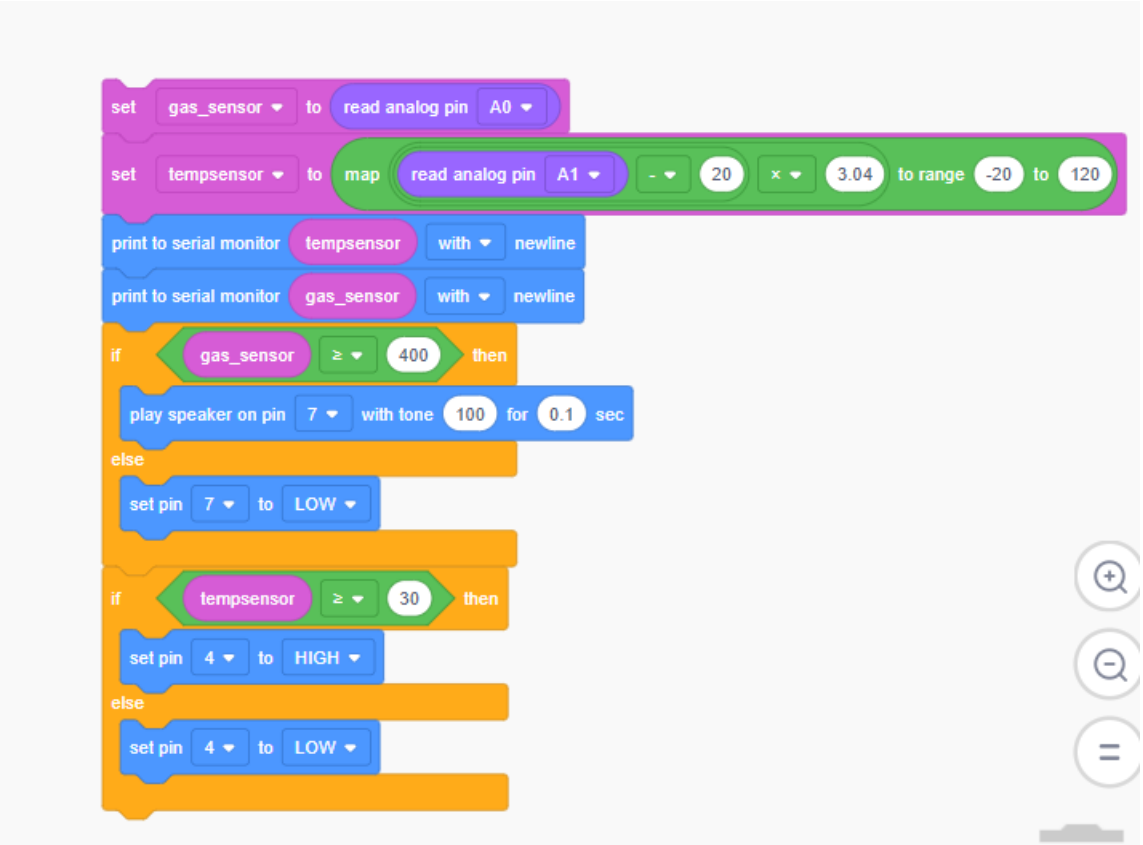
set gas_sensor to read analog pin A0
set tempsensor to map read analog pin A1 - 20 × 3.04 to range -20 to 120
print to serial monitor tempsensor with newline
print to serial monitor gas_sensor with newline
if gas_sensor ≥ 400 then
play speaker on pin 7 with tone 100 for 0.1 sec
else
set pin 7 to LOW
if tempsensor ≥ 30 then
set pin 4 to HIGH
else
set pin 4 to LOW

5) Automatic Street light

Aim:

To create Automatic Street light using Photoresistor using Arduino uno board in Tinker cad.

Requirements:

- 1x Arduino uno board
- 2x Light bulbs
- 1x Photoresistor
- 1x resistor
- Jumper wires

Procedure:

Step 1: Take a Arduino uno board and place it in the workspace.

Step 2: Connect the terminal 1 of both light bulbs to Gnd of Arduino uno board

Step 3: Connect the terminal 2 of both light bulbs to D12 and D7 of Arduino uno board.

Step 4: Connect terminal 2 of resistor to to terminal 1 of photoresistor

Step 5: Connect terminal 2 of photoresistor to D2 of Arduino uno board

Step 6: Connect terminal 2 of photoresistor to 5v of Arduino uno board

Step 7: Connect terminal 2 of resistor to Gnd of Arduino uno board

Step 8: Write the code and start simulation.

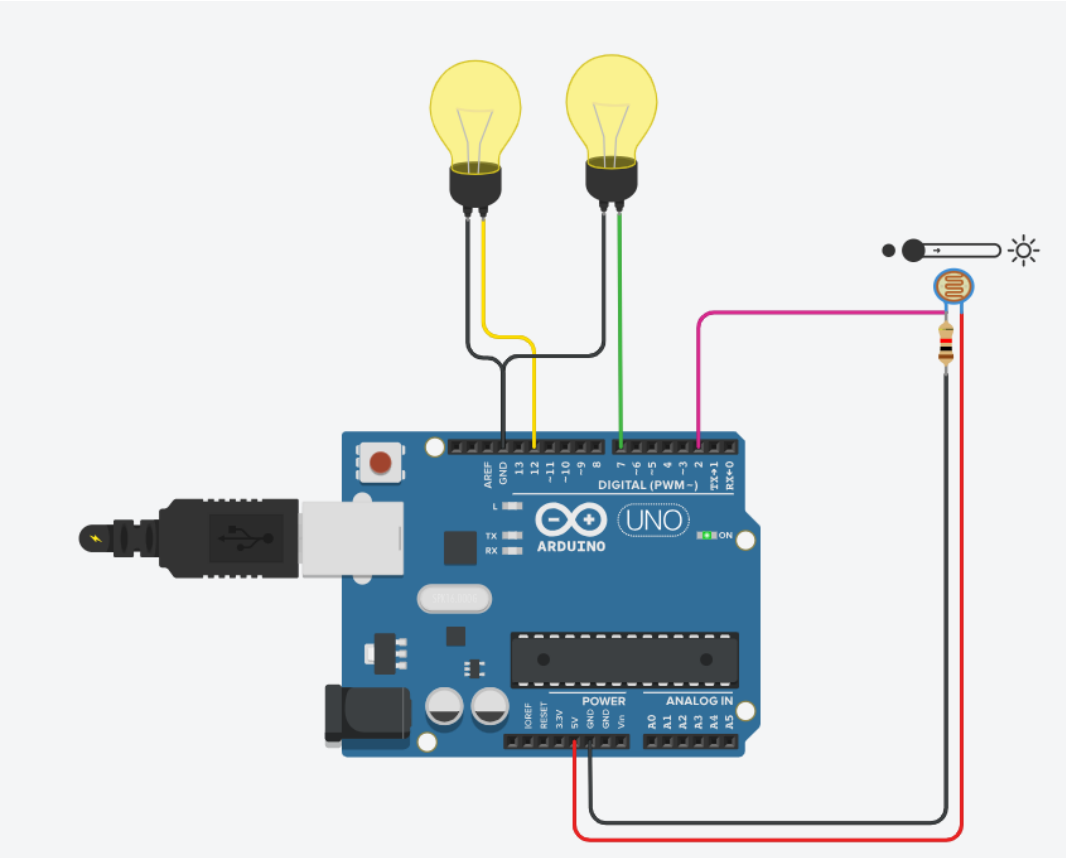

Code:

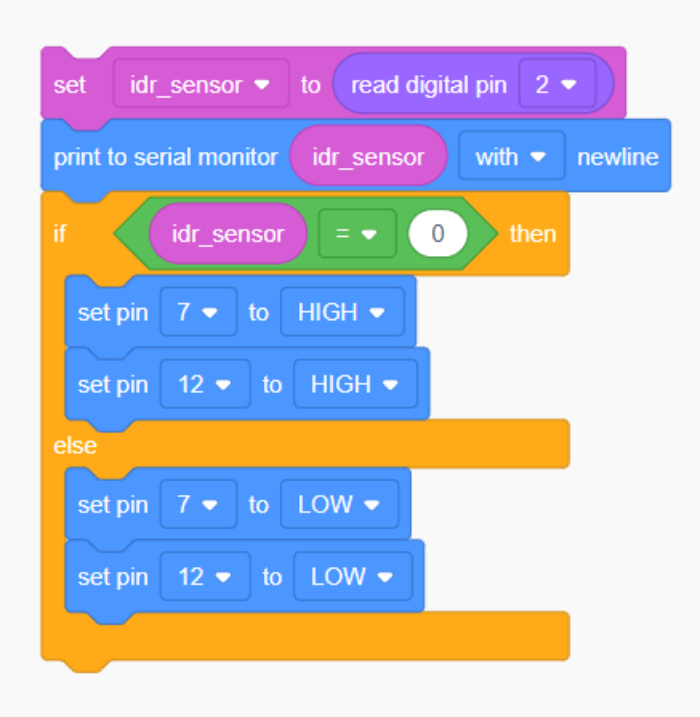
set idr_sensor to read digital pin 2
print to serial monitor idr_sensor with newline
if idr_sensor = 0 then
set pin 7 to HIGH
set pin 12 to HIGH
else
set pin 7 to LOW
set pin 12 to LOW

6) Blind stick

Aim:

To create Blind stick using ultrasonic sensor using Arduino uno board in Tinker cad.

Requirements:

- 1x Arduino uno board
- 1x Vibration motor
- 1x NPN transistor
- 1x piezo
- 1x ultrasonic sensor
- Jumper wires

Procedure:

Step 1: Take a Arduino uno board and place it in the workspace.

Step 2: Connect the negative of vibration motor, negative of piezo and gnd of ultrasonic sensor to Gnd of Arduino uno board.

Step 3: Connect the positive of vibration motor to collector of Npn transistor

Step 4: Connect emitter of npn transistor and power of ultrasonic sensor to 5v of Arduino uno board

Step 5: Connect the base of npn transistor, positive of piezo, trigger and echo of ultrasonic sensor to any digital input pins of Arduino uno board

Step 6: Connect the positive of vibration motor to collector of npn sensor

Step 7: Write the code and start simulation.

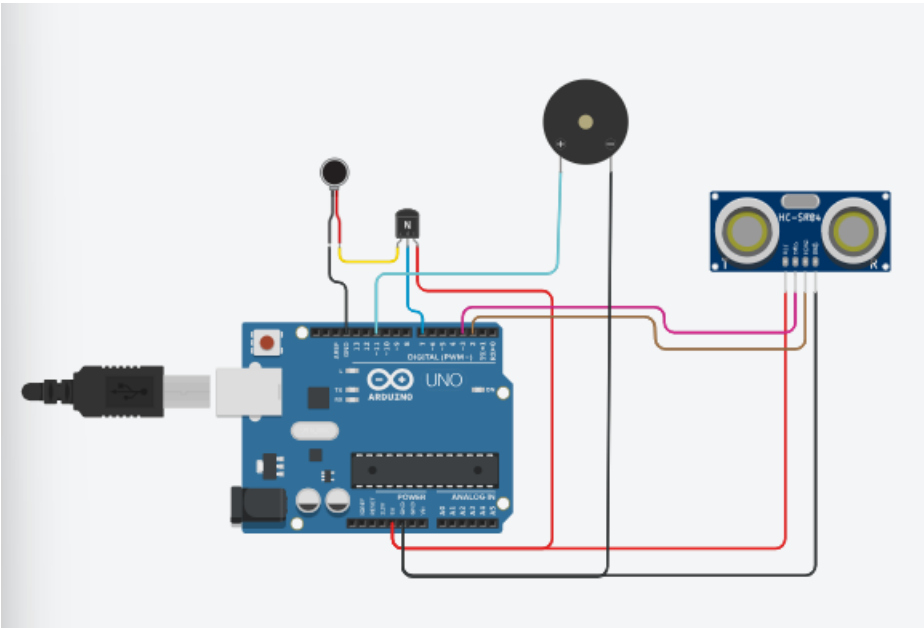

Code:

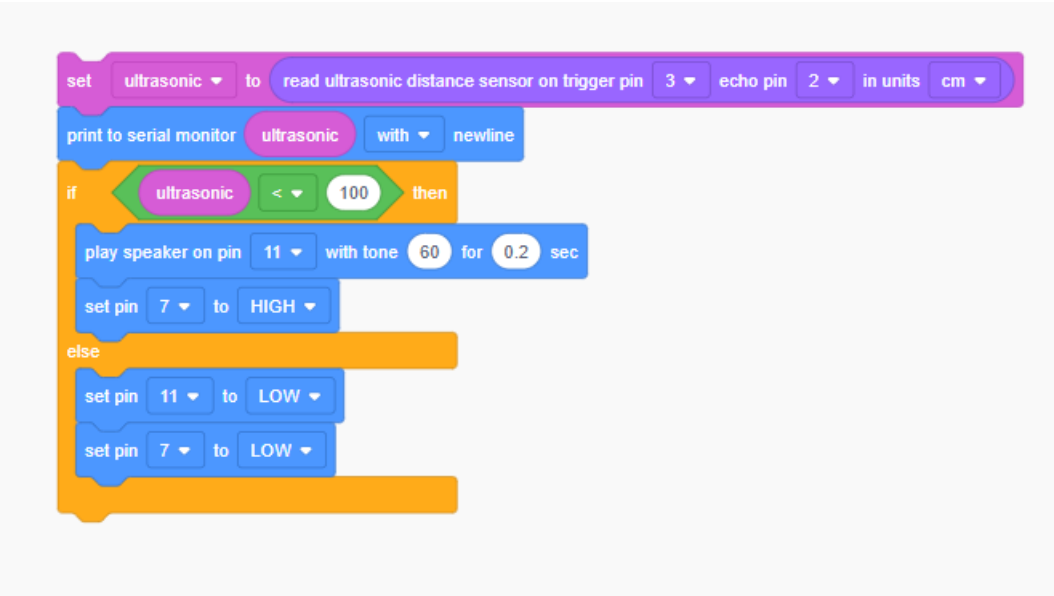
set ultrasonic to read ultrasonic distance sensor on trigger pin 3 echo pin 2 in units cm
print to serial monitor ultrasonic with newline
if ultrasonic < 100 then
play speaker on pin 11 with tone 60 for 0.2 sec
set pin 7 to HIGH
else
set pin 11 to LOW
set pin 7 to LOW

7) Temperature monitoring system

Aim:

To create Temperature monitoring system using Temperature sensor using Arduino uno board in Tinker cad.

Requirements:

- 1x Arduino uno board
- 3x Led bulbs
- 1x Temperature sensor
- 3x resistor
- Jumper wires

Procedure:

Step 1: Take a Arduino uno board and place it in the workspace.

Step 2: Connect the terminal 2 of 3 resistors to cathode of 3 led bulbs

Step 3: Connect the terminal 1 of 3 resistors to Gnd of Arduino uno board.

Step 4: Connect anode of 3 led bulbs to any digital input pins of Arduino uno board

Step 5: Connect power of temperature sensor to 5v of Arduino uno board

Step 6: Connect vout of temperature sensor to A0 of Arduino uno board

Step 7: Connect Gnd of temperature sensor to Gnd of Arduino uno board

Step 8: Write the code and start simulation.

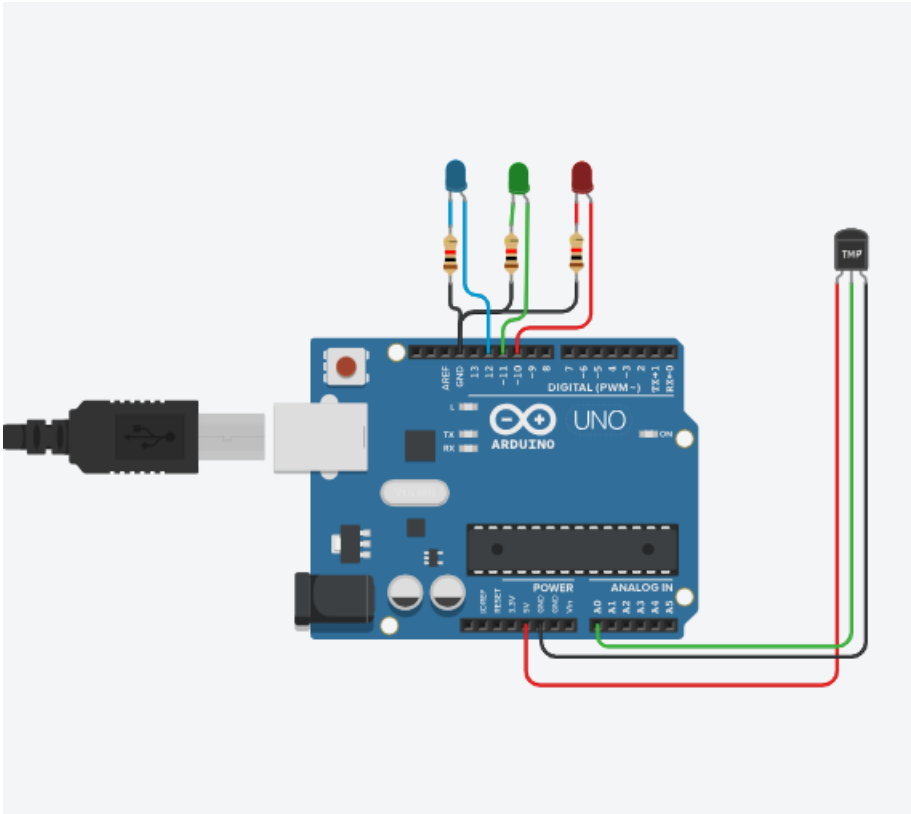

Code:

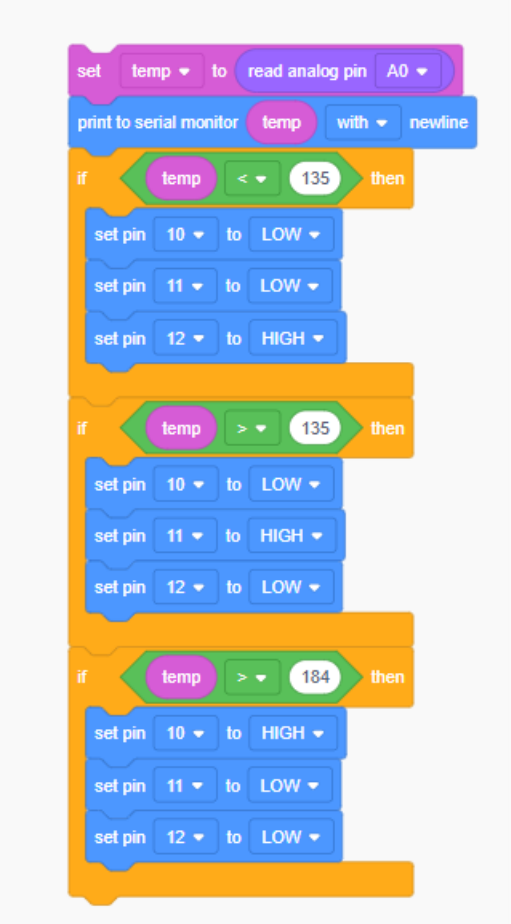
set temp to read analog pin A0
print to serial monitor temp with newline
if temp < 135 then
set pin 10 to LOW
set pin 11 to LOW
set pin 12 to HIGH
if temp > 135 then
set pin 10 to LOW
set pin 11 to HIGH
set pin 12 to LOW
if temp > 184 then
set pin 10 to HIGH
set pin 11 to LOW
set pin 12 to LOW

8) Automatic irrigation system

Aim:

To create Automatic irrigation system using soil moisture sensor using Arduino uno board in Tinker cad.

Requirements:

- 1x Arduino uno board
- 1x soil moisture sensor
- 1x DC Motor
- 1x Relay SPDT
- 1x Power supply
- Jumper wires

Procedure:

Step 1: Take a Arduino uno board and place it in the workspace.

Step 2: Connect the terminal 8 of Relay SPDT to any digital input pins of Arduino uno board

Step 3: Connect the terminal 5 of Relay SPDT to any Gnd of Arduino uno board

Step 4: Connect the terminal 12 of Relay SPDT to positive of power supply

Step 5: Connect the terminal 6 of Relay SPDT to terminal 1 of DC Motor

Step 6: Connect the terminal 2 of DC motor to Negative of power supply

Step 7: Connect the power of soil moisture sensor to 5v of Arduino uno board

Step 8: Connect the Ground of soil moisture sensor to Gnd of Arduino uno board

Step 9: Connect the signal of soil moisture sensor to analog input pins of Arduino uno board

Step 10: Write the code and start simulation.

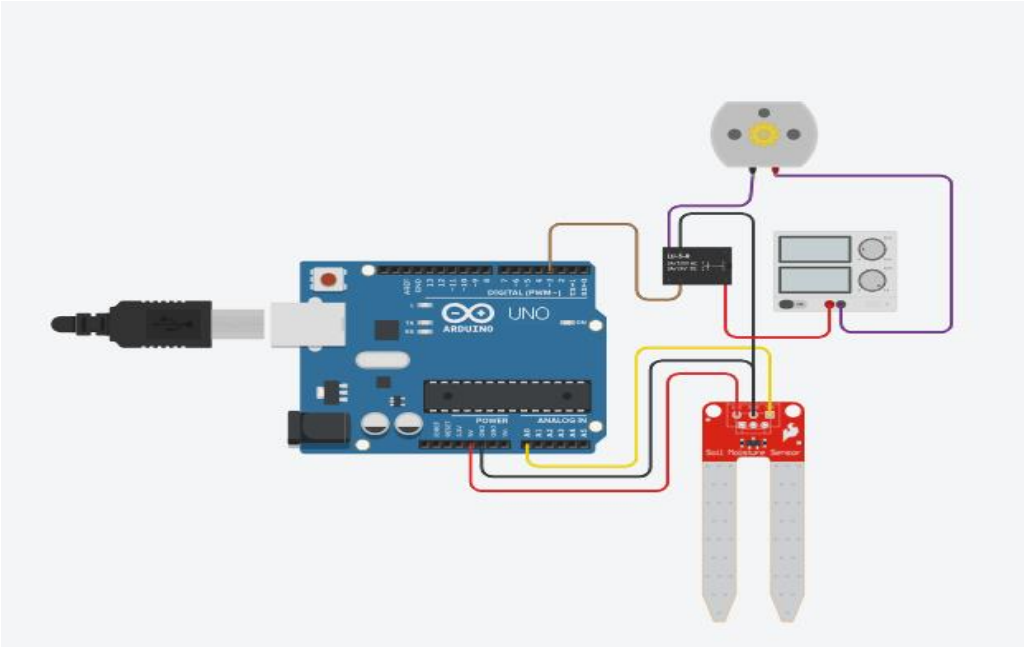

sssssCode:

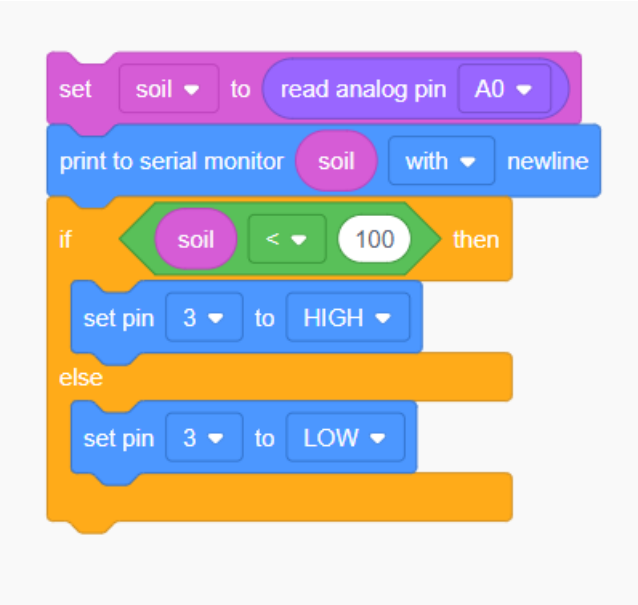
set soil to read analog pin A0
print to serial monitor soil with newline
if soil < 100 then
set pin 3 to HIGH
else
set pin 3 to LOW

9) Password Door Lock using Arduino

Aim

To create a **password-based door locking system** using the **Arduino Uno** in **Tinkercad Circuits**.

Requirements

- 1 × **Arduino Uno**
- 1 × **4x4 Matrix Keypad**
- 1 × **Servo Motor** (for door lock mechanism)
- 1 × **16x2 LCD Display** (optional for display)
- 1 × **Buzzer** (optional for wrong password alert)
- Jumper wires
- Breadboard
- Power supply

Procedure

Step 1: Take an **Arduino Uno board** and place it in the workspace in Tinkercad.
Step 2: Place the **4×4 matrix keypad** and **servo motor** above the Arduino board.
Step 3: Connect the **keypad pins** to the digital pins of Arduino (for example pins 2– 9).
Step 4: Connect the **servo motor signal pin** to **digital pin 10**, and connect **VCC to 5V** and **GND to GND**.
Step 5: (Optional) Connect the **LCD display** to Arduino for displaying messages like *Enter Password*, *Access Granted*, or *Access Denied*.
Step 6: Write the Arduino code to compare the entered password with the stored password.
Step 7: Start the simulation in Tinkercad and enter the password using the keypad.

Circuit Diagram & Explanation

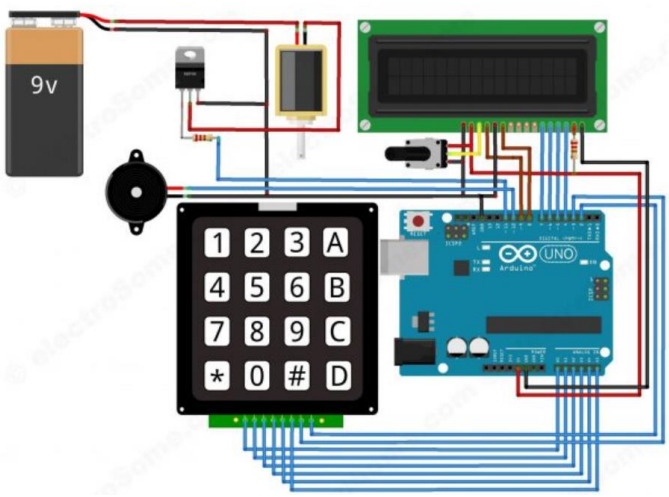

10) Ultrasonic Distance Measurement using Arduino

Aim

To measure the distance of an object using the **Arduino Uno** and **Ultrasonic Sensor HC-SR04** in **Tinkercad Circuits**.

Requirements

- 1 × **Arduino Uno**
- 1 × **Ultrasonic Sensor HC-SR04**
- Jumper wires
- Breadboard

Procedure

Step 1: Take an **Arduino Uno board** and place it in the workspace.

Step 2: Take an **Ultrasonic Sensor HC-SR04** and place it near the Arduino board.

Step 3: Connect the **VCC pin** of the ultrasonic sensor to **5V** of Arduino.

Step 4: Connect the **GND pin** of the ultrasonic sensor to **GND** of Arduino.

Step 5: Connect the **TRIG pin** of the sensor to **Digital Pin 9** of Arduino.

Step 6: Connect the **ECHO pin** of the sensor to **Digital Pin 10** of Arduino.

Step 7: Write the Arduino code and start the simulation in Tinkercad.

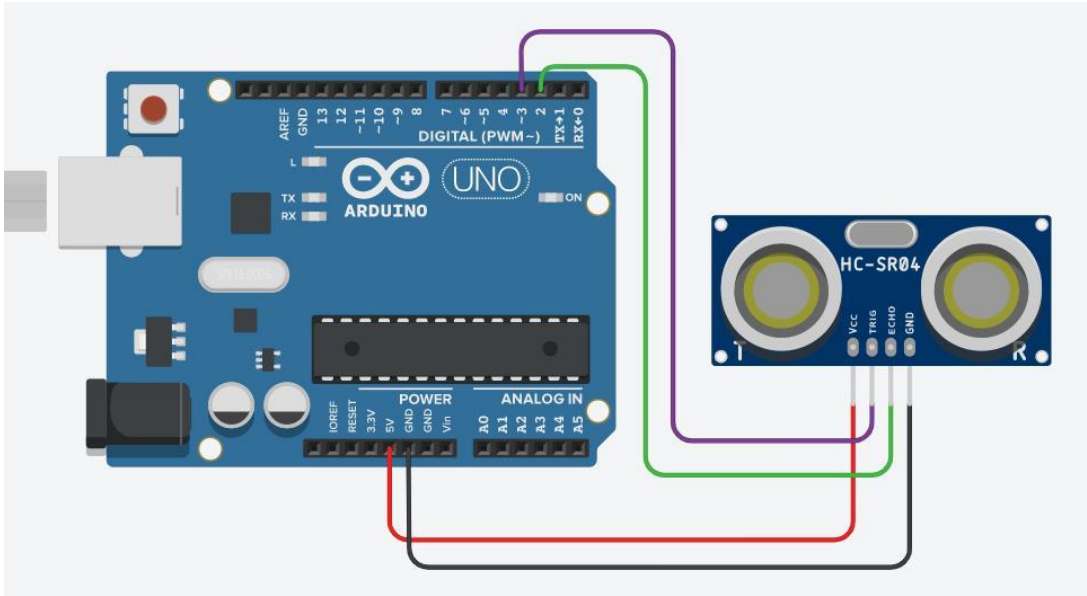

CODING

```
/*16x2 LCD connection with Arduino Uno R3:
 # LCD RS -->D13
 # LCD   Enable(E)-->D12
 # LCD DB4-->D11
 # LCD DB5->D10
 # LCD DB6-->D9
 #   LCD DB7-->D8
 # LCD RW--> GND
 # LCD GND,V0,RW,LED(- CATHODE)-->pin to ground
   # LCD VCC,LED(+ ANODE)--> +5V

 HC-SR04 Ultrasonic Sensor connection With   Arduino Uno R3:
 #VCC--> +5V
 #TRIG--> D7
 #ECHO--> D6
 #GND--> pin   to ground
 */
```