REVISION	DESCRIPTION	DATE	APPROVED

TPS65185

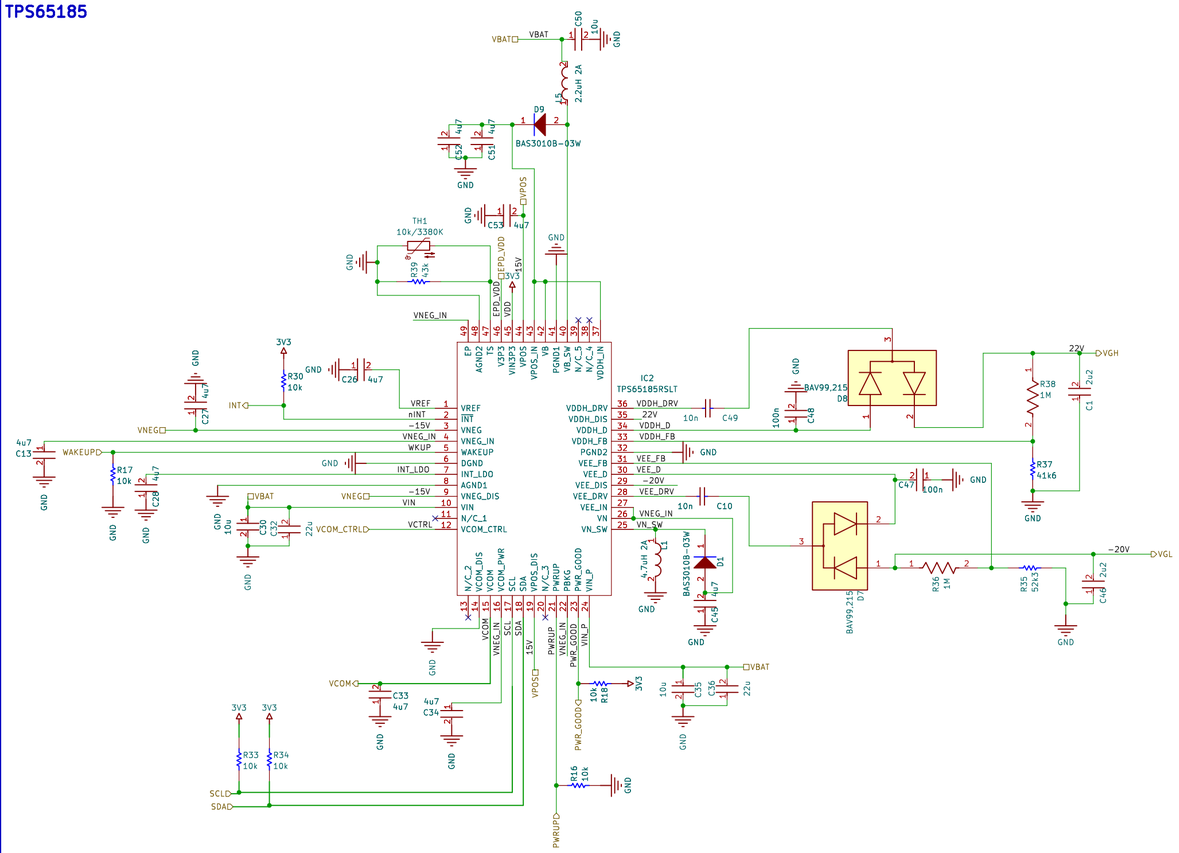

Voltage Sense

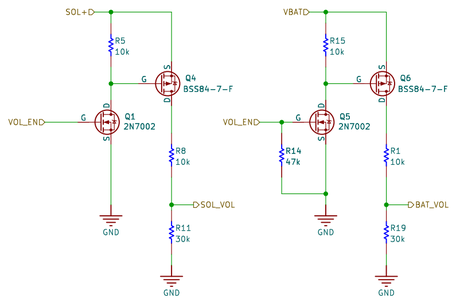

BQ25505

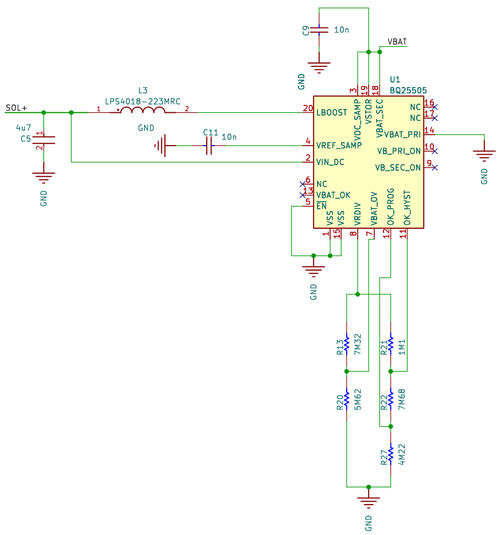

AP61100

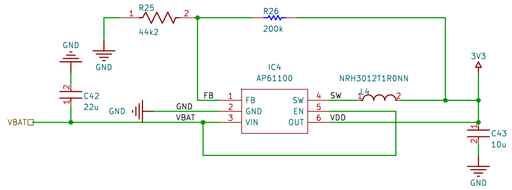

BQ24040

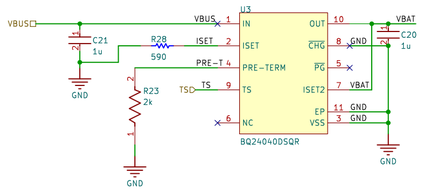

EPD Connector

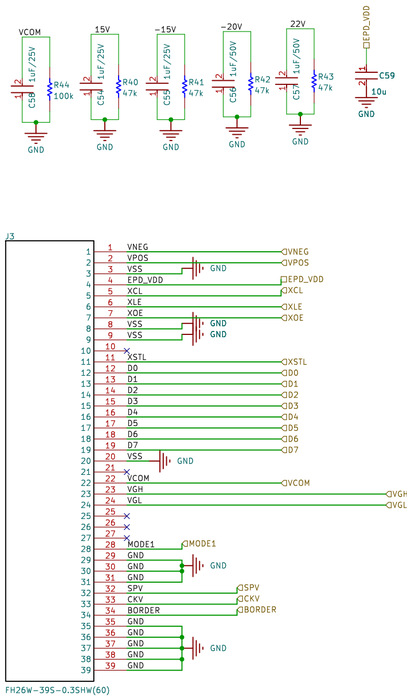

M3 Mounting Holes

ESP32-S3 Wroom-1 N8R2

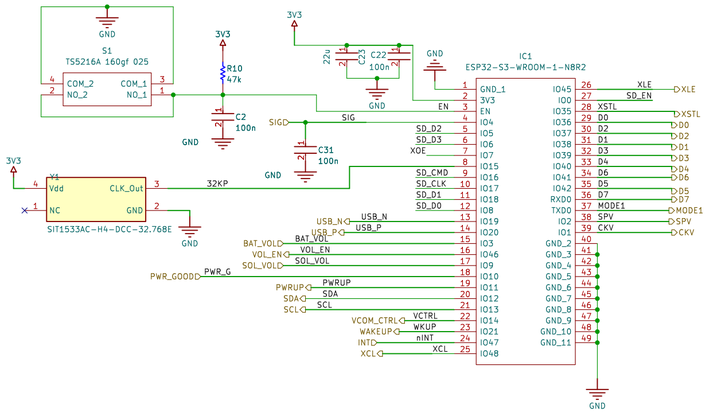

SD-Card Mount

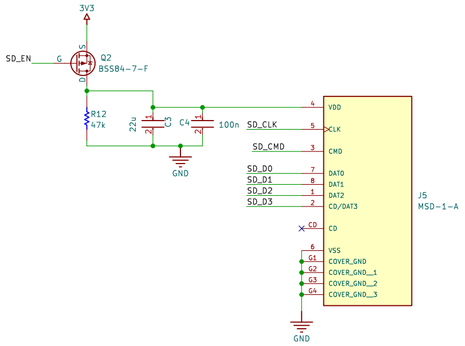

Solar Connector

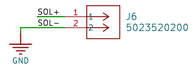

Battery Connector

Secondary Board Connector

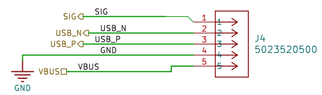

PROJECT: ${PROJECT}

PROJECT REVISION: ${VERSION}

DOCUMENT REVISION: ${CONTROL_PROJECT_REVISION}

ITEM NUMBER: ${ITEM_NUMBER}

TITLE

SIZE	CAGE CODE	DWG NO.	REV
A2	${CAGE_CODE}	${DOC_NO_SCH_DWG}	${ITEM_REVISION}

SCALE: ${SCH_SCALE} FILE NAME: Main_Board.kicad_sch SHEET 1 OF