UNIT – III

CONTROL OF PARTICULATE CONTAMINANTS

Factors affecting Selection of Control Equipment – Gas Particle Interaction – Working principle, Design and performance equations of Gravity Separators, Centrifugal separators Fabric filters, Particulate Scrubbers, Electrostatic Precipitators – Operational Considerations

3

CONTROL OF PARTICULATE CONTAMINANTS

3.1. INTRODUCTION

3.1.1. Concepts of Air Pollution Control

Air pollution is one of the major problems for the environment as well as industries and hence it should be minimised. The various effects of air pollution on human beings, animals, plants, etc., are described in detail in previous chapters. It is practically impossible to remove the air pollutants in the air completely, but have to be reduced. Reduction or control of air pollution is carried out in the following three stages.

1. Reducing the volume of polluted streams
2. Changing the process of causing the pollution
3. Treatment to the emitted gas

Air pollution control is not a single measure, but all the above said procedures are implemented effectively.

The techniques for controlling air pollution can be either without an air pollution control device or with air pollution control equipment. Application of control technology depends on the following factors.

- ✓ Nature of source
- ✓ Effluents from the source
- ✓ Air pollution regulations
- ✓ Waste generated from the technology.
- ✓ Disposal of the waste.

The general methods or techniques without an air pollution control device include process change, change in fuel, improved dispersion, good operating practices, and plant shutdown or relocation. Control equipment removes the pollutant, convert to less harmful contaminant or recover a valuable material for further use.

3.1.2. Objective of Air Pollution Control

The important objectives of the air pollution control are as follows.

1. Controlling of effects of air pollution on public
2. Protection of animals, plants, etc.
3. Protection of properties against pollutants attack
4. Providing the acceptable environment, etc.

3.1.3. Factors Affecting the Selection of Control Equipment

The following factors are to be considered when selecting particular equipment for controlling the air pollutant.

1. Type of the industry
2. Concentration and characteristics of pollutant

3. Carrier gas characteristics
4. Process factors
5. Efficiency required
6. Operational factors
7. Constructional measures
8. Other factors

Each factor is explained as follows;

1. Type of the Industry

Equipment can be selected, based on the type of industry and the type of the pollutant (gaseous or particulate matters). The important pollutants which are emitted from cement industries are fugitive dust and sulphur oxides. Also the important pollutants from automobiles are Carbon-Monoxides and Hydro Carbons. In order to control the pollutant, it is essential to know the type of pollutant and type of the industry emitted that particular pollutant.

2. Concentration and Characteristics of Pollutant

Concentration and characteristics of pollutant are also the important factors decide the equipment selection. Particulate characteristics include particle size spectrum, effective particle shape, particle density, physical and chemical properties (stickiness, fluidity, corrosiveness, electrical conductivity) etc.

3. Carrier Gas Characteristics

It includes temperature, pressure, density, viscosity, etc.

4. Process Factors

Process factors include the flow variability, volumetric gas rate, particulate concentration rate, allowable pressure drop, etc.

5. Efficiency Required (or Control Efficiency)

Control efficiency is defined as the measure of emission reduction efficiency and it is a percentage value representing the amount of emissions that are controlled by a control device, process change or reformulation. The selection of particular air pollution control equipment is based on the control efficiency.

Control efficiency is calculated by,

$$\left.\begin{matrix}\text{Control}\\ \text{efficiency}\end{matrix}\right\} = \frac{\left\{\begin{matrix}\text{Uncontrolled Emission Rate} -\\ \text{Controlled Emission Rate}\end{matrix}\right\} \times 100}{\text{Uncontrolled Emission Rate}}$$

6. Operational Factors

Operational factors include the maintenance, continuity of operation, safety and health protection, ultimate use of collected materials, etc.

7. Constructional Measures

Constructional factors include structural limitations (such as floor space and head room) and material limitations (such as pressure, temperature and corrosion service requirements)

8. Other Factors

Dust disposal, energy considerations, etc.

3.1.4. Self -Cleansing Properties of the Environment

Self-cleansing properties of the atmosphere, (like the running water bodies) clean and remove the air pollutants in the atmosphere, under various natural processes. If the quantity of air pollutants created by human beings and industries are within the natural self-cleansing capacity of the atmosphere, there will not be any considerable effects due to the air pollution. When the discharge or emission from industries in human activities exceeds the limit, atmosphere gets polluted and all are affected by the polluted air.

In order to control the effects of various air pollutants, numbers of control measures are carried out either at sources or at later timings. It is better to control the emissions of pollutants from industries and automobile by **mechanical methods** or by **providing high-rise chimneys**, to improve the dispersion and dilution of the pollutants.

Following are various natural self-cleansing properties of the atmosphere, used for automatic continuous cleaning of the atmosphere.

1. Dispersion
2. Gravity settling with flocculation
3. Gravity settling without flocculation
4. Absorption
5. Adsorption
6. Rainout etc.

These procedures occur continuously and automatically and thus reduce and remove the pollutants entering the air.

Dispersion

Dispersion in air pollution control is defined as the chemical or physical process of distributing the air pollutants over the wide area of the atmosphere by means of wind etc.

> Dispersion is a **diluting mechanism.**

Dispersion of air pollutants by wind defects reduces the concentration of the pollutants at one place.

Gravitational Settling

Gravitational settling is a natural process, in which the larger particles of air pollutants in the air, settle down on buildings, trees and other tall objects.

> **Gravitation settling** removes the flocculated particles formed by gravity.

Absorption

Absorption is also a natural process, in which gaseous and particulate matters of air pollutants are collected either by mist or rain and settle down with mist or rain. Absorption is carried out below the cloud level in the atmosphere.

The process of absorbing the pollutants and falling with raindrops is called **washout** or **scavenging** and this is removing the smaller particles of size less than 1 μm in size.

The gaseous pollutants are removed in dissolved state with moisture, either with or without chemical changes.

Rainout

Rainout is defined as the process of dropping out the pollutants and involving the precipitation process above the cloud level, where sub-micron particles present in the atmosphere in the clouds serve as condensation nuclei, around which drops of water may form and fall out as raindrops.

> **Rainout process** increases the rainfall and fog formation in urban zones.

Adsorption

Adsorption is the physical process of collecting the gaseous, liquid and solid air pollutants in the air by a surface, where they are concentrated and retained.

Various adsorbents

1. Natural surfaces such as soils
2. Rocks
3. Buildings
4. Blades of grass
5. Other surfaces

> **Inertial impaction** is the deposition of larger aerosol particles on the walls of an airway conduit.

Adsorption is carried out by either **gravitational settling** or **inertial impaction** in which the particles may come in contact with adsorbent's surfaces.

Inertial impaction is more suitable for particles of size 10 μm to 15 μm.

3.2. AIR POLLUTANTS CONTROL

Controlling of air pollutants is the challenging task, because of the quantity and constituents of air pollutants from various processes, plants and industries.

The air pollutants can be controlled by the following two methods.

1. By changing the raw materials in industries
2. By installing suitable air pollution control equipments

1. Prevention at Source

For manufacturing and for other engineering processes, it is better and simple to change the raw materials, used for industrial usage, free from causing any pollution.

The process of changing the suitable raw materials in industries, to avoid their pollution is called Prevention at source. This method reduces the cost for installing costly equipment in industries.

2. Air Pollution Control Equipments

It is the costlier method to prevent the mixing of air pollutants in the air to the great extent and in which the selection of particular type of equipment is based on the type of pollutant emitted from the industry and its concentration.

3.2.1. Types of Emissions

In order to control the air pollutants and their effects, it is very essential to study the following four types of emissions, which are emitted from the industries.

(*i*) Uncontrolled (fugitive) emission
(*ii*) Controlled (steady-state) emission
(*iii*) Transient emission
(*iv*) Accidental (emergency) emission

Fugitive Emission or Uncontrolled Emission

Uncontrolled (Fugitive) emission is defined as the emissions from the leaks of faulty and damaged joints, flanges, valves and openings during material and energy transferring, recycling, packaging (and product removal) and storage. This emission is also called as **diffuse emission**.

Fugitive emission can be controlled by the following methods.

1. By implementing the regular maintenance of valves, fittings, etc.
2. By installing the gas detectors to identify and to estimate the quantity of leaks.
3. By using good quality accessories and fittings etc.

Controlled Emission

Controlled emission is defined as the emission, during the normal operation of the plant and the emission is allowed and guided through the chimneys of the plant.

Transient Emission

Transient emission is defined as the heavy emission occurs during start-up and shut down operations of the plants, for a short period. This emission varies with time.

Accidental (or) Emergency Emission

Accidental (or) Emergency emissions are defined as the heavy emissions occur due to major fault in one or more of the process equipment or due to accidents either in controlled or uncontrolled form. The total emission period change with the capacity of O&M (operation and maintenance) staff to rectify the fault.

Uncontrolled and accidental emissions are very dangerous to the atmosphere. They affect plant employees and public outside the plant.

In steady and transient emissions, plant employees are safe but it affects the public outside the plant premises.

3.3. METHODS FOR CONTROLLING POLLUTION

Following two methods are generally adopted for controlling the air pollution.

1. Controlling the air pollution at sources
2. Controlling the air pollution by installing equipments

3.3.1. Controlling Air Pollution at Sources

Controlling of air pollution from sources may be applied for controlled and uncontrolled emissions. The emissions can

be spread over a larger area of atmosphere through the chimneys, installed at larger heights. This can be done by the dilution of air pollutants over larger distances and reducing the pollutants near the emission source.

This method reduces the concentration of pollutants at some particular places.

Techniques without Control Devices (at Source)

Following techniques are used to control the air pollution without the usage of any emission control devices.

- ✓ Process Change
- ✓ Change in Fuel
- ✓ Good Operating Practices
- ✓ Plant Shutdown or Relocation

Process Change

This method involves a modification of an existing process or the introduction of a new process and it is called **Pollution Prevention**. Process modification is a popular technique to control air pollution. Major efforts are underway in all industries to modify processes to reduce pollution. Changes in industrial processes to reduce raw materials and fuels also lead to reduction in air emissions.

The promotions to use fluorescent lights and to conduct energy audits by electric utilities are examples of less electricity demand. This results in less fuel use at the power plant and hence less air pollutants are emitted. The use of wind energy, geothermal energy, hydroelectric power and

solar energy is increasing and is helping in reducing air pollution.

The purpose is to prevent pollution rather than control it at the point of release.

Change in Fuel

This technique involves the use of less polluting fuel to reduce air pollution. Use of low sulphur fuel instead of high sulphur fuel by electric utilities is an example of this method, because low sulphur fuel is much more expensive than high sulphur fuel. The other choice for an electric utility can be the use of natural gas as a fuel. Fuel switching based on meteorological conditions or air pollution forecasts have been used to prevent air pollution problem in many areas.

Nuclear power plants are relatively pollution free when compared to the coal fired power plants. However, they have been subjects of controversy in their overall environmental impact.

Good Operating Practices

Release of air pollutants could be avoided by maintaining good housekeeping in the plant and performing proper maintenance.

For example, a liquid chemical spread over the floor evaporates rapidly and will cause an increase in emission rate for that chemical.

Plant Shutdown or Relocation

This method is not a good one because of economic factors. Most cities develop land-use planning and industrial

zoning regulations to avoid this situation. Encouragement to use new technology through tax credits or grants may help a company to relocate the plant within the city. In some cases to shut down the plant is only the possible solution.

Use of Control Devices

The emissions from the plant are passed through a control device before releasing to atmosphere. The pollutants are removed, destroyed or transformed in the control device before discharging into ambient air. The devices are discussed in the following chapters.

General public thinks of these devices whenever they think about air pollution control. However, there are other methods available to reduce air pollution as discussed above. Other possibilities should also be considered before deciding to use a control device.

3.3.2. Controlling of Air Pollution by Installing Equipments

In order to reduce the pollution load entering the environment from stationary sources, the following methods are adopted.

1. Replacement of burning fuel by electricity or solar energy.
2. Using high quality cereals and efficient engines.
3. Replacement of old machineries with the new one.
4. By installing mechanical air pollution controlling devices.

Air pollution controlling devices are generally divided into two types.

(*i*) Devices used to reduce particulate matter

(*ii*) Devices used to reduce the gaseous pollutants

3.3.3. Control of Particulate Pollutants in Industries

The control of particulate matter is an important aspect of industrial air pollution engineering.

Particles are collected by a combination of several mechanisms. The available mechanisms are **gravitational settling, centrifugal impaction, inertial impaction, direct interception, diffusion** and the **electrostatic attraction**.

The physical phenomenon of gravitational settling, centrifugal impaction and electrostatic attraction are given in the previous chapters. The other three mechanisms are described below.

Inertial Impaction

The large particles in the gas stream have high inertia to follow the gas streamlines around the impactor and are impacted on the impactor surface, while the small particles and the gas tend to diverge and pass around the interceptor.

Direct Interception

In case of direct interception, the particles have less inertia and rarely follow the gas streamlines around the fiber. If the distance between the centre of the fiber and the outside of the fiber is less than the particle radius, the particle will graze or hit the fiber and be intercepted. Inertial impaction and direct

interception mechanisms account for 99% collection of particles greater than 1 μm aerodynamic diameter in fabric filter systems.

Diffusion

In diffusion, small particles are affected by collisions on a molecular level. Particles less than 0.1 micrometer have individual or random motion.

The particles may have a different velocity than the fluid and at some point could come in contact with the fiber and be collected. **Agglomeration** also contributes to particle collection.

> The particles do not necessarily follow the gas streamlines, however they move randomly through-out the fluid and this is called **Brownian Motion**.

Following are the important equipments, used to control the particulate matter.

1. Gravitational Settling Chambers
2. Centrifugal Collectors (Dynamic precipitators, cyclone collectors, etc.)
3. Wet Scrubbers (or) Wet Collectors (Spray towers, Wet Cyclone Scrubbers, Venturi-Scrubbers etc.)
4. ESP (Electro-Static Precipitators)
5. Fabric Filters

3.4. GRAVITY SEPARATORS OR GRAVITATIONAL SETTLING CHAMBER

3.4.1. Introduction

Gravity Separators (Gravitational settling chambers) use the gravitational force to remove solid (particulate) matters from the air pollutants. The gas stream enters the chamber, where the velocity of the gas reduced. Larger particles drop out the gas and are collected in Hoppers.

Particle size of about 50 μm can be removed by gravitational settling chamber.

When the flow velocity of the fluid (air stream) is reduced as it enters to a chamber, the gravitational force causes the particles to settle on the bottom of the chamber.

3.4.2. Working

Settling chamber consists of an enclosed chamber, in which the velocity of the dirty air is reduced considerably, which permits the dust particle to settle down by gravitational force.

The smokes (or dirty air) emitted from the industries are permitted to pass through the settling chamber. [Fig 3.1.(c) Based on the principle of Stoke's law, the largest size particles settle down at the bottom of the chamber. In these chamber, the horizontal gas velocity should be kept as low as possible, to allow the stream line airflow, for ensuring optimum settling conditions.

The velocities are kept between 0.3 m/sec to 2.5 m/sec in the chambers, which permits coarse particle of size 40 μm and above to be removed by this chamber.

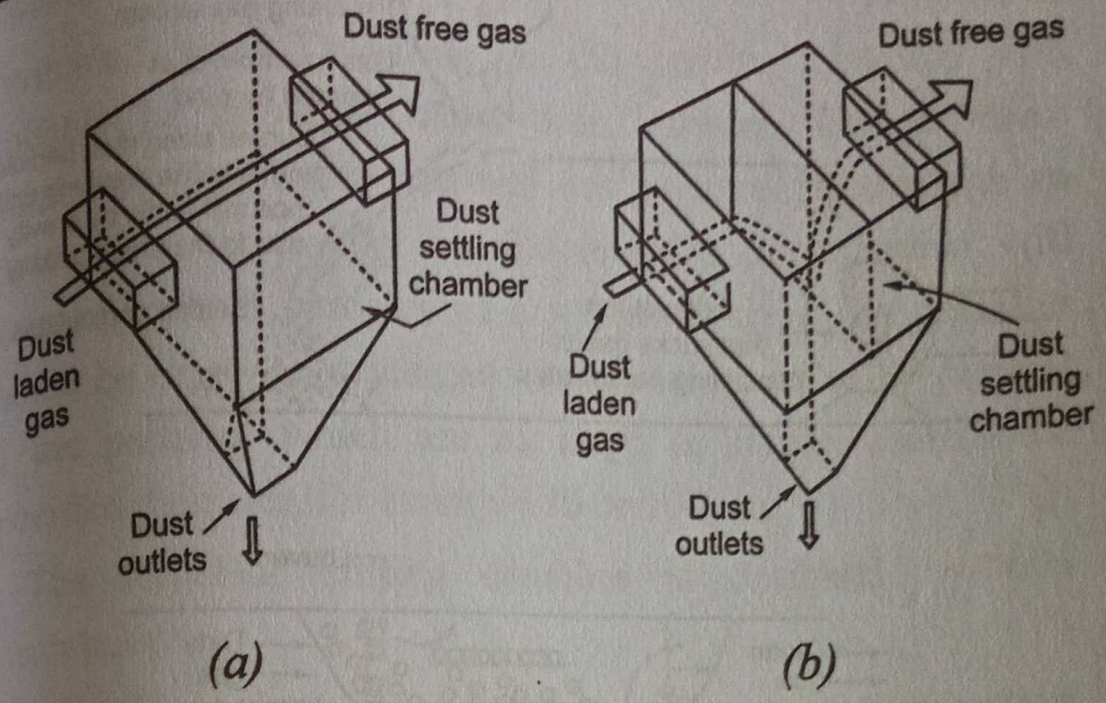

Fig. 3.1.(a) (b) Gravity Settling Chamber

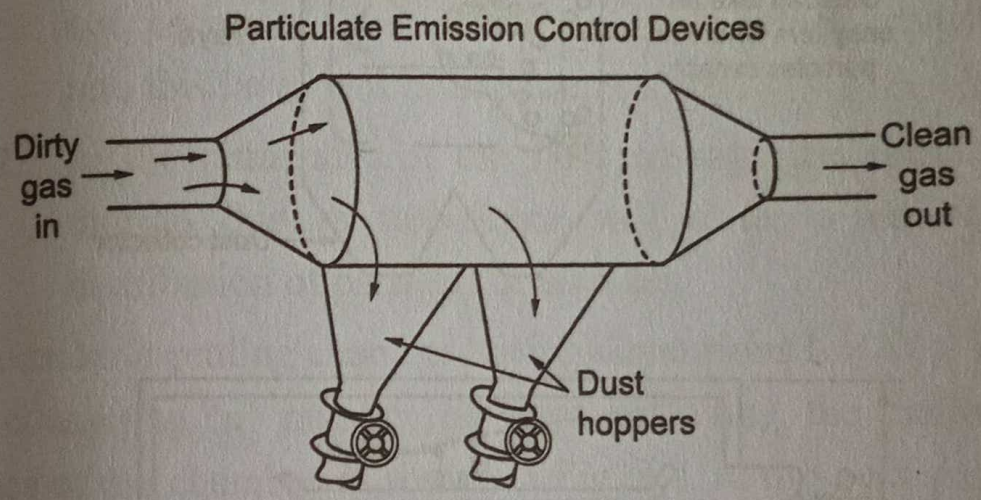

Fig. 3.1. (c) Gravity Settling Chamber

3.4.3. Design and performance equations of Gravity Separators

Collection of very small particles is practically difficult, by using a settling chamber. Hence the design considerations are generally based on laminar flow, requires either a very large size or an inordinately large number of trays with an unusual shape of chamber.

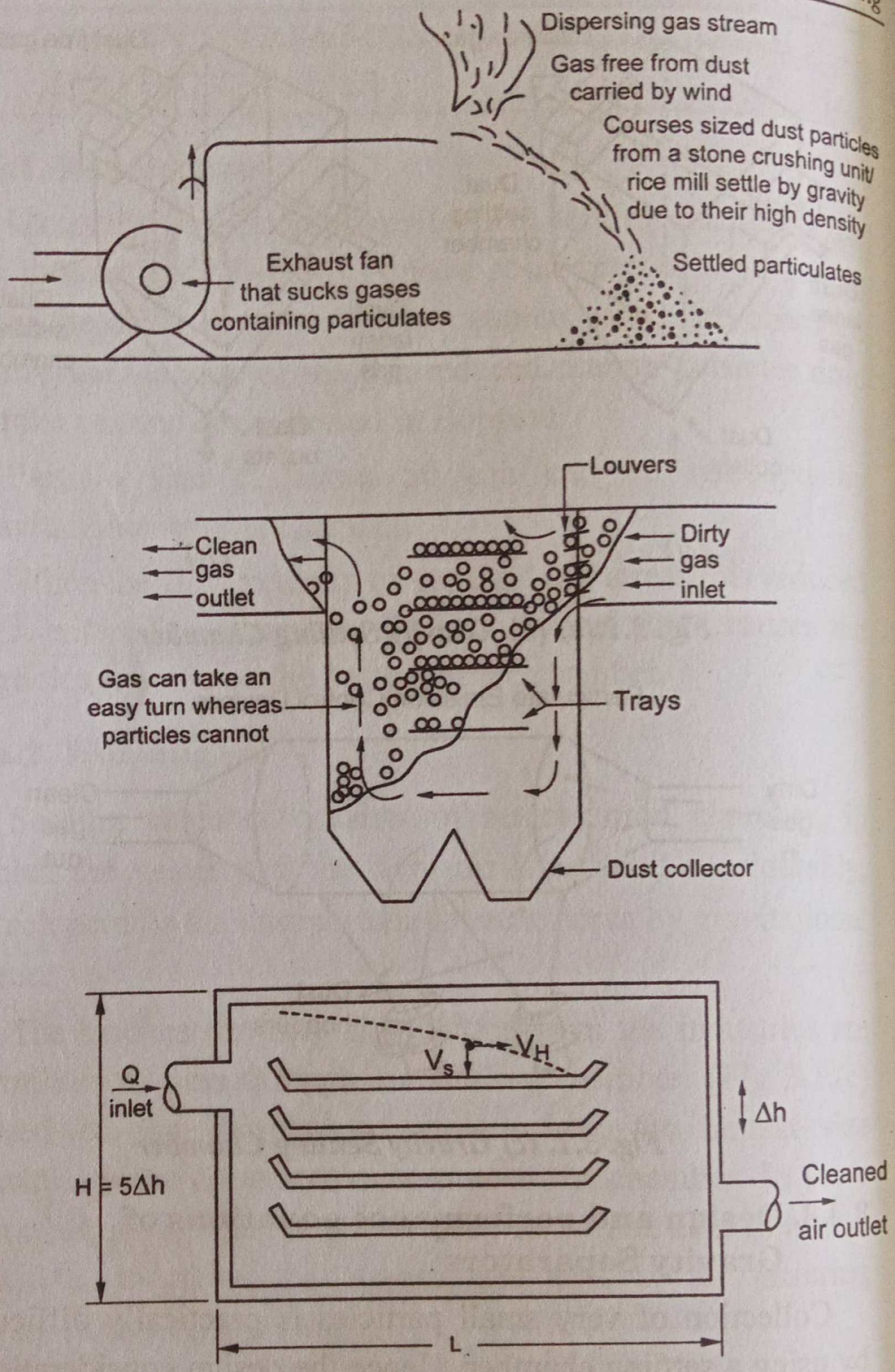

Fig. 3.2. Gravity Settling Chambers

The laminar chamber has the advantage of giving theoretically perfect collection efficiency for particles of the

designated size. The flow in the settling chamber will probably be turbulent rather than laminar. The turbulent chambers offer a more practical design concept, although no matter how big it may be, theoretically the chamber will never collect all particles of a specified size. The chamber should be reasonably designed for the removal of 99 percent of the particles which are as large or larger, than some specified diameter, for example 50 or 100μm.

The turbulent settling chamber is designed by two assumptions.

1. There is a laminar layer adjacent to the bottom surface of the passage into which turbulent eddies do not penetrate, because any particle which crosses into this layer will be captured shortly.
2. In the remainder of the flow passage the eddying motion due to turbulence will cause a uniform distribution of particles of all sizes.

Consider a settling chamber having dimensions L × W × H, and containing '*n*' number of trays including the bottom surface of the chamber as shown in Fig. 3.2. In this section, it is assumed that, the case of laminar flow in the passage ways between the trays; this condition is less common but does some times occur.

The criterion for laminar flow is that the Reynolds number, which is based on hydraulic diameter, should be less than 2300. The hydraulic diameter for flow passage between the trays is given by,

$$D_h = \frac{2W\Delta H}{W + \Delta H}$$

The Reynolds number,

$$R_e = \frac{VD_h\rho}{\mu}$$

The velocity inside the chamber 'V' is given by,

$$V = \frac{Q}{nW\Delta H}$$

where, Q - flow rate of the gas stream

Substituting for V and D_h, in the above equation,

$$R_e = \frac{2Q\rho}{n\mu\,(W + \Delta H)}$$

If the thickness of the trays is neglected the distance between the trays is related to the height of the settling chamber as, $\Delta H = H/n$

Then the above equation becomes,

$$R_e = \frac{2Q\rho}{\mu\,(nW + H)}$$

It is to be noted that these equations hold good only when there is no dust layer collected in the trays. If a layer of dust of thickness H_d is present, then the above equation becomes,

> **Terminal velocity** is the velocity at which the vertical component of the drag force exactly counteracts the net gravity force (i.e. gravity force minus buoyancy force).

$$R_e = \frac{2Q\rho}{\mu\,(nW + H - nH_d)}$$

For laminar flow conditions ($R_e < 2300$) within the trays, particles of size dp of a particular material will settle a distance 'y' with a terminal velocity V_t in time given by,

$$t = \frac{y}{V_t}$$

During this same time the particles are transported a distance L, with the velocity of the gas stream 'V' i.e., $t = L/V$

Equating these two, $t = \frac{y}{V_t} = \frac{L}{V}$

The value of "y" can be found from the concept of the particle settling velocity. If the particles are assumed to be uniformly distributed over the incoming streams, the efficiency of collection for particles having the diameter used in calculating V_t is given as the ratio of y to ΔH.

$$\eta = \frac{y}{\Delta H}$$

$$= \frac{LV_t}{V\Delta H} = \frac{nWLV_t}{Q}$$

Efficiency,

For 100% L, length of chamber $L = \frac{Q}{nWV_t}$

When length is more or when $y > \Delta H$, all particles of that size (or larger) will be collected in the settling chamber.

The terminal settling velocity can be calculated by using the **Stoke's** law,

$$V_t = gd_p^2 \frac{(\rho_p - \rho_g)}{18\mu_g}$$

Stoke's law is a reasonable approximation for calculating the settling velocity of particulates suspended in air also.

The largest size particle (d), that can be removed with 100% efficiency in settling chamber having the length 'L' and height 'H' is given by,

$$d = C \cdot \sqrt{\frac{18\,\mu \cdot \varpi_y \cdot H}{\gamma \cdot \Lambda \cdot \rho_\pi}}$$

Where,

v_n - Horizontal velocity of air entering to the chamber (m/sec)

μ - Viscosity of air (kg/m sec)

C - Correction factor (generally taken as 2)

ρ_p - Density of particles removed (kg/m^3)

The above equations should be used only as guides to the collection efficiency of the settling chamber, as several factors cause deviations. These include hindered settling at high particle concentrations, non-uniform gas velocity over the settling height and width, particle re-entrainment and turbulence. As a general rule, chamber velocities below 3 m/s are satisfactory for avoiding re-entrainment of most of the materials. If the flow is turbulent, the collection efficiency of a settling chamber is given by,

$$\text{Efficiency, } '\eta' = 1 - e^{(-nLW\,Vt/Q)}$$

3.4.4. Advantages and Disadvantages

I. Advantages

1. Simple design, easy installation and maintenance
2. Less pressure losses

3. Low initial cost
4. Dry and continuous disposal of solid particles

II. Disadvantages

1. Larger size particles are only settled
2. Low collection efficiency
3. Requires larger space

Because of the above advantages and disadvantages, settling chambers are mostly used as pre-cleaners. They are sometimes used in the process industries, particularly in the food and metallurgical industries as the first step in dust control. Use of settling chambers as pre-cleaners can also reduce the maintenance cost of high efficiency control equipment, which is more subject to abrasive deterioration.

3.5. CENTRIFUGAL COLLECTORS

3.5.1. Centrifugal Collectors

Centrifugal collectors are the mechanical devices used to separate the particulate matter (of 0.1 to 1000 μm) from atmospheric air, using centrifugal force. Generally particles of size 5 μm to 25 μm are removed by this instrument.

Some of the centrifugal collectors (or precipitators) are,

(a) Dynamic Precipitator
(b) Cyclone Collector (or Cyclone Separator)
(c) Impellers etc.

I. Advantages of Centrifugal Collector

1. Low-cost arrangements
2. Simple design, easy installation and maintenance

3. Requires less area
4. Continuous disposal of dusts
5. Less pressure losses
6. Can handle high-volume of gases at high temperature (up to 100°C)
7. Suitable for industries producing larger particulate matters.

II. Disadvantages of Centrifugal Collector

1. Requires high head rooms
2. Less efficiency for smaller particles
3. Collection rates vary with dust loading and flow rates.

3.5.2. Dynamic Precipitator

Dynamic precipitator is a mechanical device which the centrifugal force to the entering gas, by rotating vanes to separate the particulate matters. Particles of size 5μ to 25μm can be eliminated by the Dynamic precipitator.

It efficiency is about 7 to 10 times higher than the cyclone separator. It is suitable for,

1. Ceramic industries
2. Food industries
3. Pharmaceutical industries
4. Woodworking industries

The important disadvantage of this device is, it is not suitable for wet-fibrous material, because wet-fibrous material can accumulate on the moving vanes of the precipitator. Below figure 3.3 shows the dynamic precipitator.

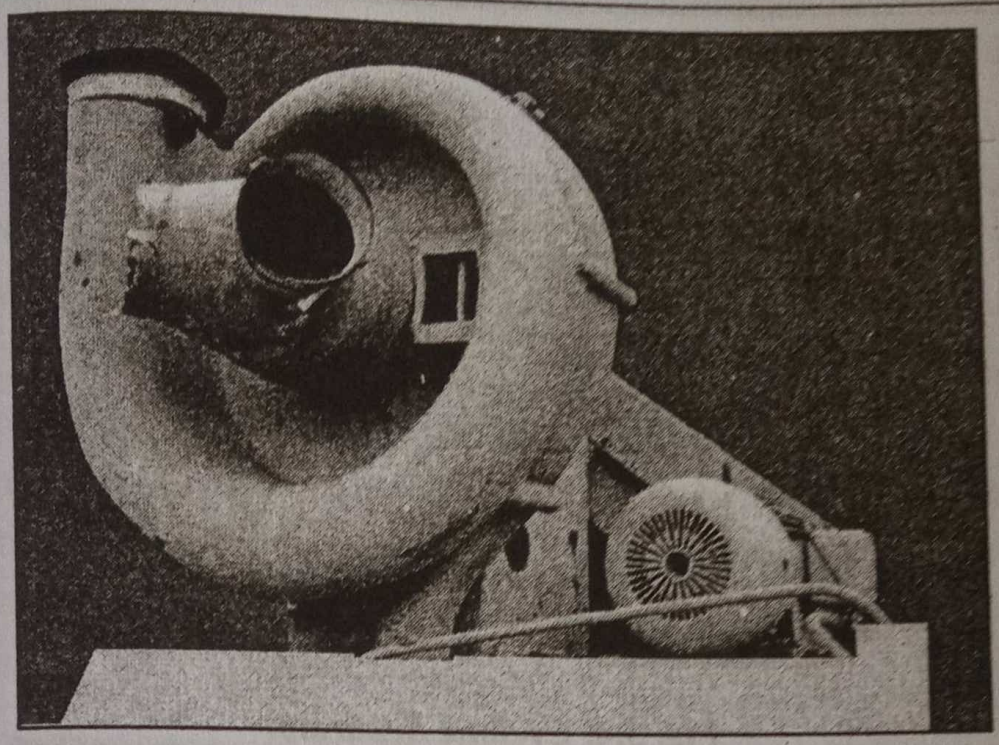

Fig. 3.3. Dynamic Precipitator

3.6. CYCLONE COLLECTOR (OR CYCLONE SEPARATOR)

Cyclone separator (or cyclone collector) is a mechanical device, used to remove the particulate matters from the air, gas or liquid without the use of filters by vortex separation.

Rotational effects and gravitational forces are used for the separation of particulate matters (dust) from the air.

3.6.1. Working

Cyclone is a conical or cylindrical container, in which high-speed rotating airflow is created. The air flows in a helical or spiral pattern beginning at the top of the Cyclone (wide end) and ending at the bottom of the Cyclone (narrow end), before leaving the cyclone.

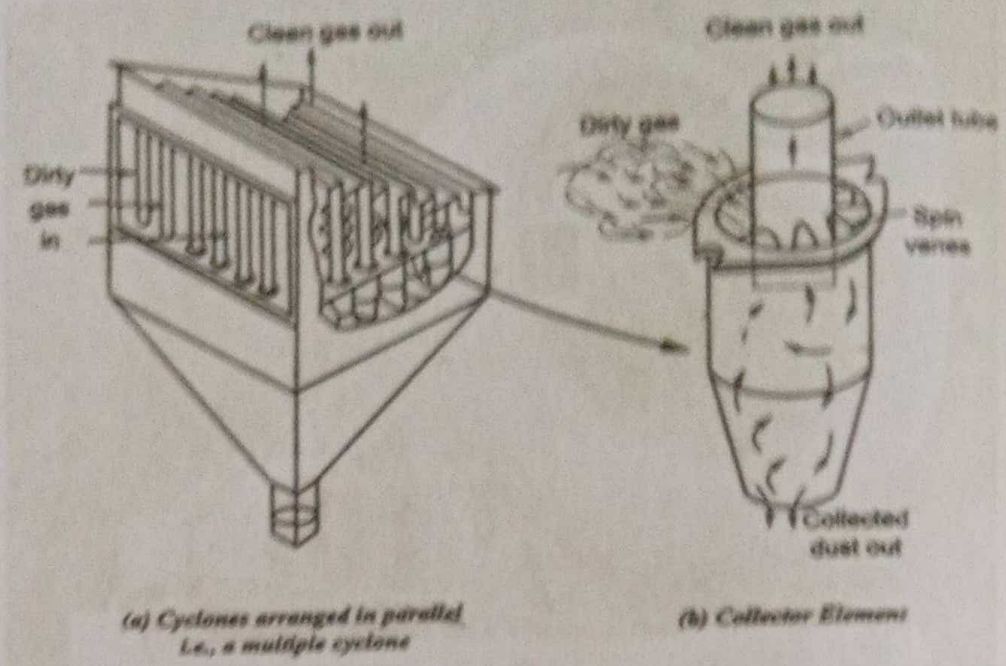

Fig. 3.4. Cyclone Separator

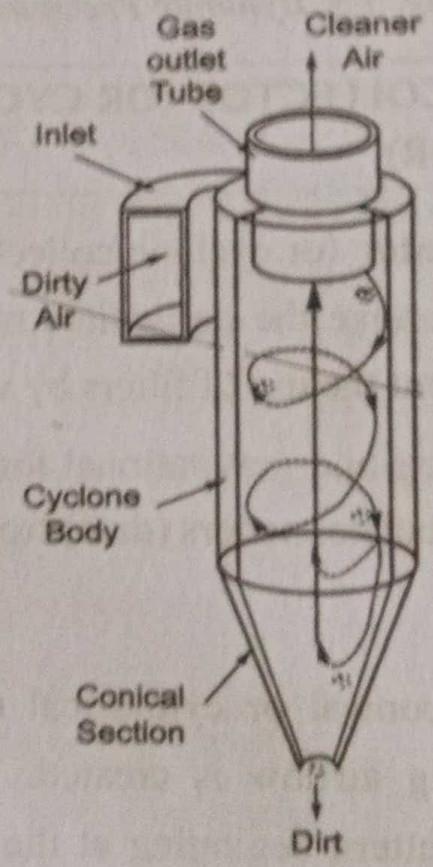

Fig. 3.5. Air flow diagram for Cyclone Separator

Due to the high speed air flow, larger particles (high density particulate matters) strike out the outer wall and then

falling to the bottom of the cyclone. At the bottom of the cyclone, the larger particles can be collected and removed.

In the conical system, the rotating flow moves towards the narrow end of the cyclone, the rotational radius of the air stream gets reduced and thus smaller particles are settled.

Cut point of the cyclone is the size of the particle that will be removed from the stream with 50% efficiency, and it is defined by the geometry of the cyclone with air-flow rate. Particulate matters, larger than the cut-point are removed with a greater efficiency and the smaller particles are removed with a lower efficiency.

3.6.2. Design and Performance of Cyclone Separator

1. Separation Factor

In a cyclone, its efficiency is based on the centrifugal force created. The inertial separating force is the radial component of the centrifugal force and is a function of the tangential velocity.

The centrifugal force generated can be calculated as,

$$\text{Centrifugal Force, } \boxed{F_c = M_p \cdot \frac{V_i^2}{r}}$$

Where,

M_p – Mass of the particles

V_i – Inlet air velocity and

r – Radius of the cyclone

The magnitude of the centrifugal force is frequently described in terms of the number of times this force exceeds the force of gravity.

The separation factor S is given by,

$$S = \frac{V_0^2}{gr}$$

2. Cut Size

Cut size, d_{pc}, is the size of those particles that are collected with 50% efficiency. The particles larger than d_{pc}, will have a collection efficiency greater than 50% while the smaller particles will be collected with lesser efficiency.

The cut size of particle (given by Lapple) is,

$$d_{pc} = \sqrt{9\mu_g \frac{b}{2\pi} N_e \, Vi \, (\rho_p - \rho_g)}$$

Where,

μ_g - gas viscosity (kg/m-sec)

b - width of cyclone inlet, m

N_e - number of effective turns within the cyclone (5 to 10 in most cases)

V_i - inlet gas velocity, m/s

ρ_p - density of the particulate matter, kg/m^3 and

p_g - gas density

3. Pressure Drop

In addition to collection efficiency, a correct estimate of the pressure drop across a cyclone is necessary, so that cost effectiveness may be calculated. The acceptable operating range is of magnitude 25 cm water or less. Pressure drop is proportional to the density of gas and square of the inlet gas velocity.

3.6.3. Factors affecting the cyclone efficiency

The efficiency of the cyclone depends on the following factors.

1. Inlet velocity of the dust laden gas.
2. Diameter of the dust profile
3. Density of the dust profile
4. Dust concentration in the carrier gas
5. Smoothness of the inner cyclone wall
6. Cyclone length or cone length
7. Ratio of body diameter to gas outlet diameter

3.6.4. Advantages of Cyclones

The advantages of cyclones are,

- ✓ Low initial cost, Simple in construction and operation
- ✓ Less pressure loses
- ✓ Low maintenance requirements
- ✓ Continuous disposal of solid particulate matter, and
- ✓ Use of any material in their construction that can withstand the temperature and pressure requirements.

3.6.5. Disadvantages of Cyclones

The disadvantages of cyclones include,

- ✓ Low collection efficiency for particles below 5 – 10 μ in diameter,
- ✓ Low collection efficiency at low particulate concentration.

- ✓ Severe abrasion problems can occur during the striking of particles on the walls of the cyclone,

Typical applications of cyclones are,

- ✓ Gas borne particulate matter in industrial operations such as cement manufacture, food and beverage, mineral processing and textile industries.
- ✓ Separation of dust in the disintegration operations, such as rock crushing, ore handling and sand conditioning in industries.
- ✓ Recovering the catalyst dusts in the petroleum industry.
- ✓ Reductions of fly ash emissions.

3.6.6. Operating Problems

The operating problems are,

- ✓ **Erosion** - Heavy, hard, sharp edged particles, in a high concentration, moving at a high velocity in the cyclone, continuously scrape against the wall and can erode the metallic surface.
- ✓ **Corrosion** - If the cyclone is operating below the condensation point, and if reactive gases are present in the gas stream, then corrosion problems can occur. Thus the product should be kept above the dew point or a stainless steel alloy should be used.
- ✓ **Build up** - A dust cake builds up on the cyclone walls, especially around the vortex finder, at the ends of any internal vanes, and especially if the dust is hygroscopic. It can be a severe problem.

3.6.7. Applications

1. Large scale cyclones are used in saw-mills, to remove saw-dust from extracted air.
2. Cyclones are used in oil refineries, to separate oils and gases.
3. In cement industry, cyclones are used for separation of fine particulate matters.
4. Cyclones are used in portable vacuum cleaners.
5. Cyclones are used in the ventilation for separating grease from the exhaust air.
6. Smaller cyclones are used to separate air-borne particles for analysis.

3.7. FABRIC FILTERS

Fabric filters are the mechanical devices, used for the dust collection and the size of particulate matters collected by fabric filters are upto 1 μm. When dust gases pass through the fabric filters and the streamline of gas diverges, collection of particular matters occurs.

In this arrangement, it is assumed that the particles are not diverging but follow the gas stream and they are intercepted to the fabric, when the centre of the particle at a distance of half of its diameter.

The use of fabric filters is based on the principle of filtration, which is the separation of solids from fluids (gases) by interposing a medium through which only the fluid can

pass. The mechanisms by which the particles come into contact with the fibres in the filter media are **Straining (sieving), Interception, Diffusion, Inertial separation** and **Electrostatic attraction.**

If the particle size of 1 μm to 5 μm moving in irregular way, the **Brownian motion** causes them to diffuse the fabric.

Small particles are retained on the fabric initially through the interception and electro-static attraction. After that, when the dust mat is formed, the fabric starts collecting particles more efficiently.

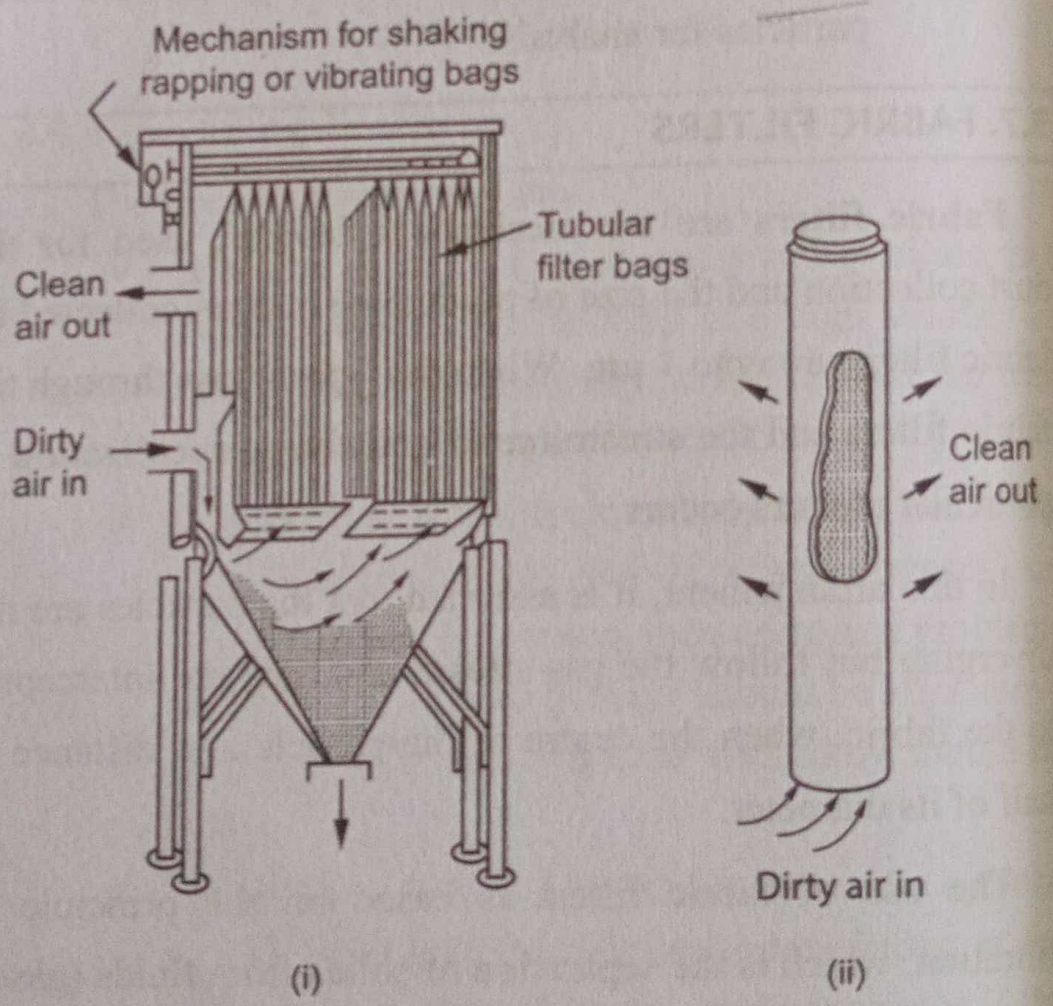

Fig. 3.6. Fabric Filter Unit

Bag Filters

In fabric filters, the type of filter is defined by the **air to cloth (or fabric) ratio.**

Based on the air to cloth ratio, fabric filters are grouped as follows.

1. Low rate bag filters
2. High rate bag filters

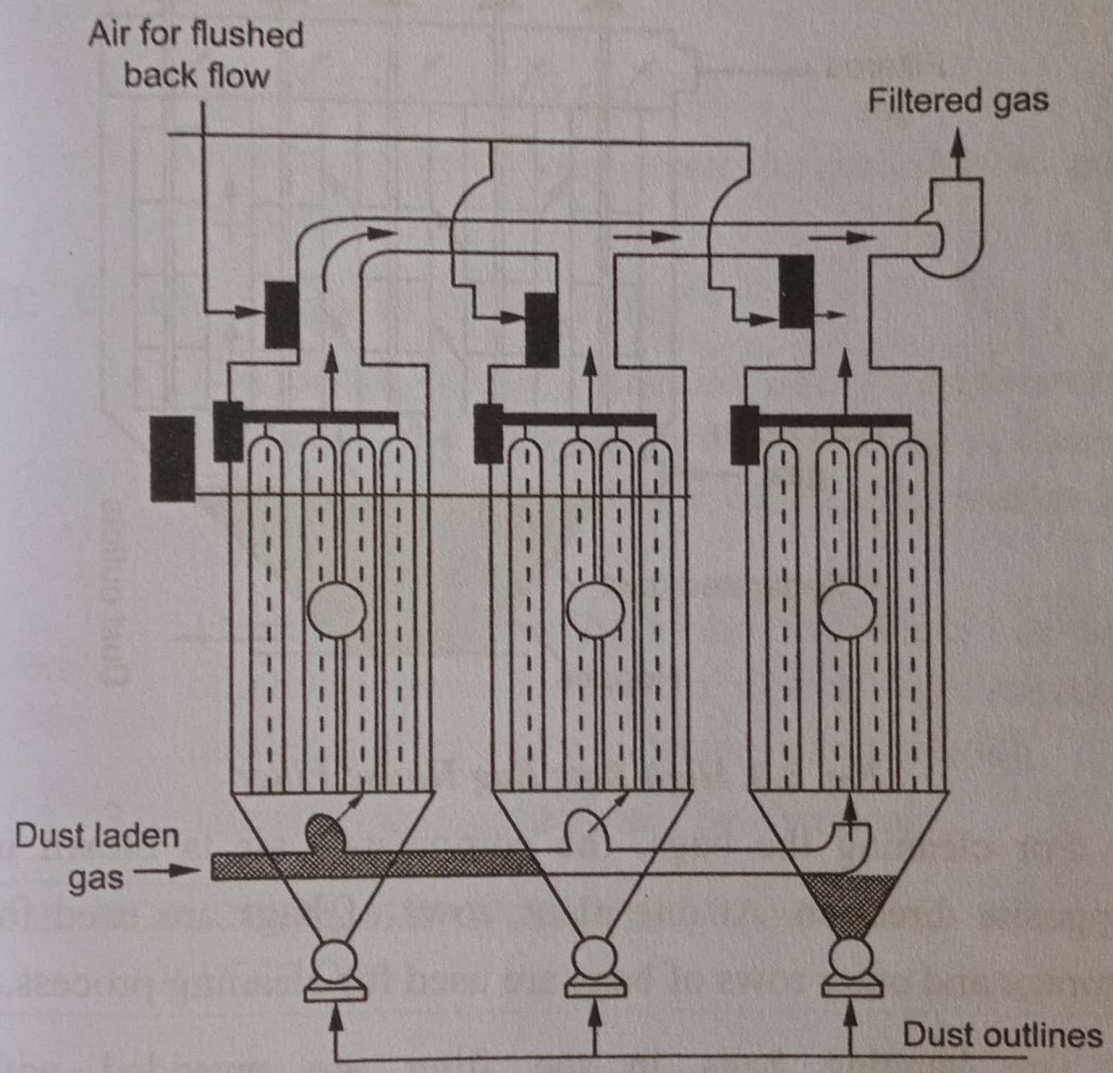

Fig. 3.7. Low Rate Bag House Filter

In the low rate bag filter (or **bag house filter**), the air to cloth ratio is maintained between 7 to 25 mm/sec.

In bag house filters, the dust air enters through the bottom of the hopper, where the high density particles settle (or fall) down due to gravity.

Settled particles deposited on the inner side of the filter, when the air is passed through them.

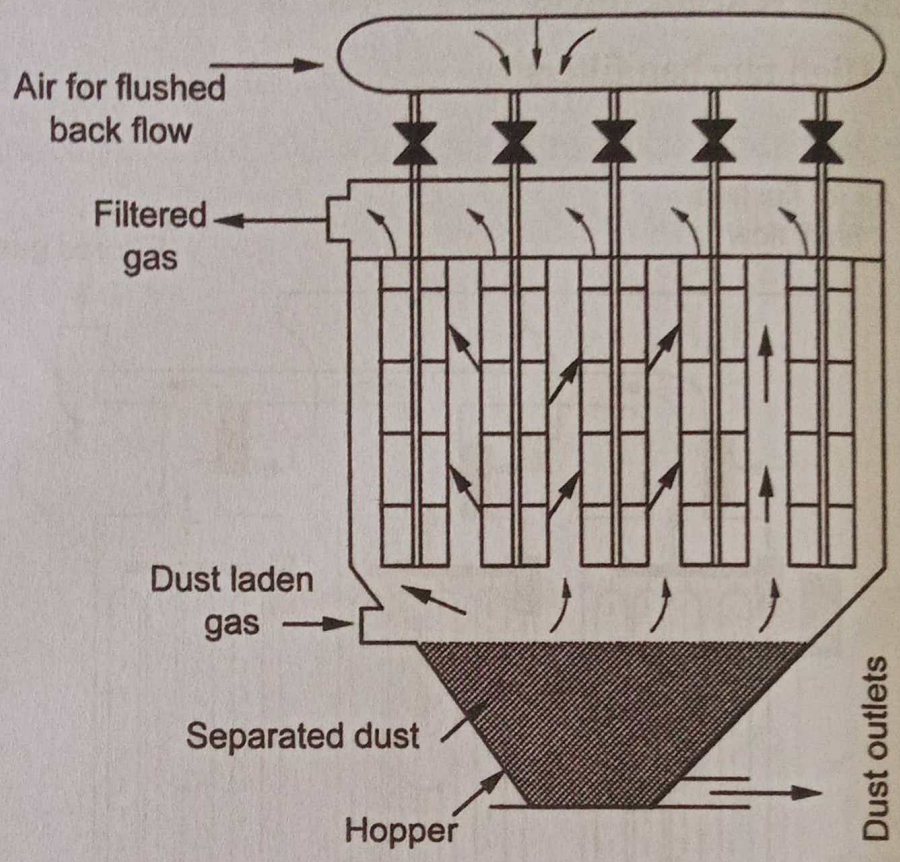

Fig. 3.8. High Rate Bag House Filter

For cleaning the bags, the compressed air is blown in opposite direction. At one plant, rows of bags are used for storage and other rows of bags are used for cleaning process.

The hanging bags in the filter are provided with an automatic shaking device for cleaning the bags of the collected dust.

Generally, the air to cloth ratio for low rate bag-house filter is maintained between 7.5 to 12.5 mm/sec and for high rate filter is 20 to 50 mm/sec.

There are two kinds of filter media for fabric filters are available. The fabrics and felts are mechanically and chemically bonded.

I. Advantages of Fabric Filters

1. Higher efficiency
2. Removes very small particles
3. Creates a pre-warning, when the performance gets decreased.

II. Disadvantages of Fabric Filter

1. The filters cannot withstand heavy temperatures and hence, the high-temperature gases to be cooled to 450° C and below, for efficient operation of fabric filters.
2. The flue gases entering to the filter should be dry, otherwise there may be a risk of condensation inside the filter and which can cause clogging.
3. The cloth may get affected by chemicals.

3.8. SCRUBBERS (SEPARATORS OR WET COLLECTORS)

3.8.1. Inertial Separators

Inertial separators collect the particles by changing the direction of motion of the flowing gas, in such a way that the particle cross over the gas steam lines and the particles are

either concentrated into a small part of the gas flow or are separated by impingement onto a surface.

The most widely used type of inertial separator is the cyclone, in which the gas undergoes some type of vortex motion so that the gas acceleration is centripetal. Hence, the particles move centrifugally towards the outside of the cyclone. Almost all practical cyclones induce the vortex motion 'passively', by appropriate design of the gas flow channel so that the device has no moving parts.

3.8.2. Wet Scrubbers

Wet Collection devices are defined as the mechanical devices, which removes the dust particles from the gas by wetting the particles with a droplet diffusion or condensation or by impinging the wetted or unwetted particles on a collecting surface and cleaning them by a flush of fluid.

Scrubbing is the air pollution control technique, used to remove some particulate and/or gases from industrial air stream.

Brownian movement is very important in the diffusion mechanism. The Brownian motion also takes place in the formation of agglomerates and thereby simplifying the separation.

Wet scrubbing is defined as the air pollution control technique, used to clean air, fuel gas, or other gases of various pollutants and dust particles with the scrubbing liquid (generally water).

The general wet collection devices are as follows.

(*a*) Cyclonic Scrubbers (Wet cyclones)

(*b*) Spray Chambers

(c) Venturi Scrubbers

(d) Packed Towers

(a) Cyclonic Separators or Cyclonic Scrubbers

Wet cyclones or cyclonic scrubbers are the wet collection devices and in these devices, there is a tangential entry of the aerosol occurs. The particulate matters are separated from the aerosol, by the centrifugal force and impingement of water at the entrance.

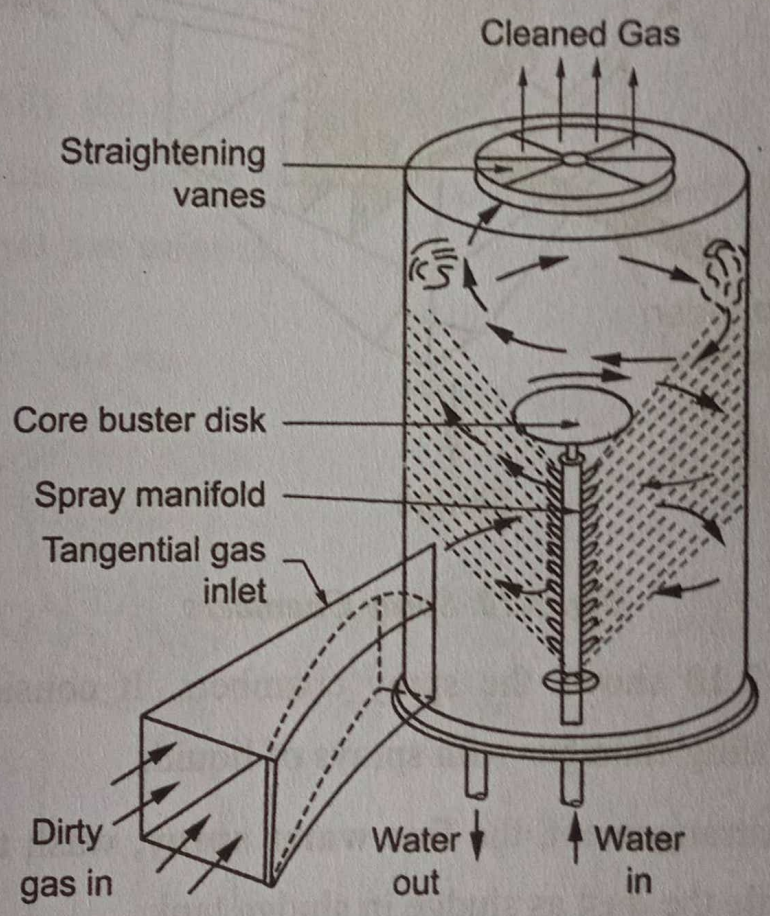

Fig. 3.9. Wet Cyclonic Scrubbers

Wet cyclones are generally provided with a moisture-elimination section, consisting of zig-zag plates. The design of cyclonic scrubbers is generally done, upto 200 *l*/min and with water requirements ranging from 2 litres to 50 litres per 40 litres of gas.

Dust particles of size upto 5 μm and above are separated with 90% efficiency and 40 to 70 mm of H_2O of pressure drop.

(b) Spray Chambers

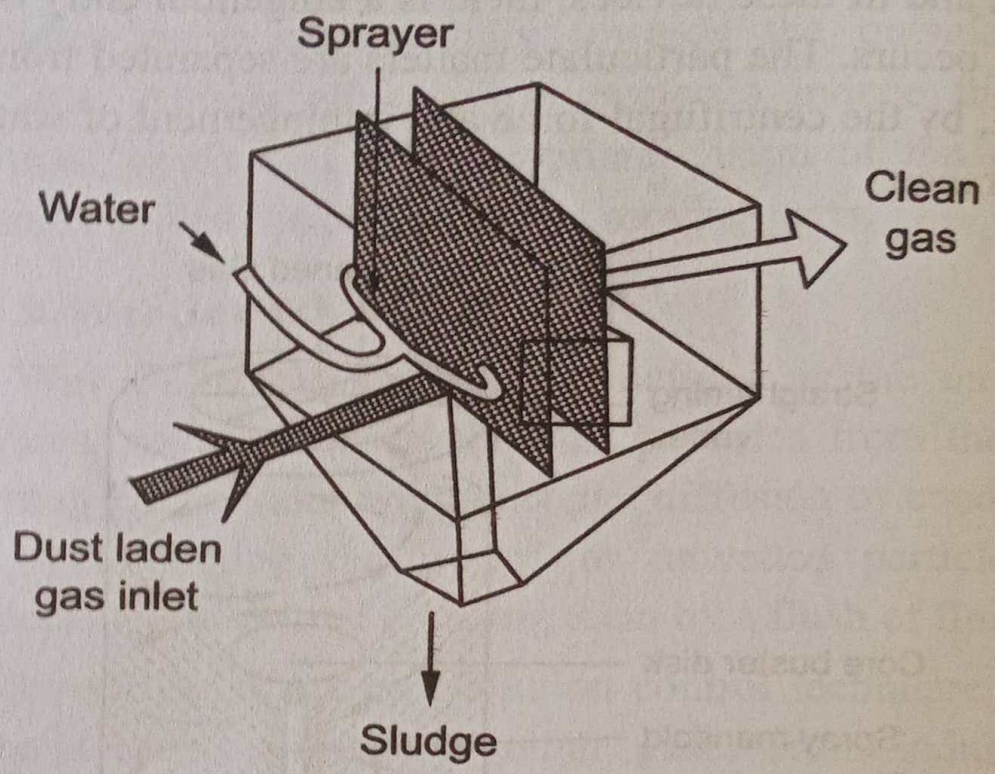

Fig. 3.10. Spray Chambers

Figure 3.10 shows the spray chambers. It consists of a gravity settling chamber with sprays of liquid.

In this arrangement, the **fine water spray**, wash the dirty air and settle the dust as sludge in sludge tank.

Like other settling chambers, some larger sized dust will settle on the surface of the water pool under gravitational force.

The removal of dust particles from air is due to the collision of dust particle with water droplet and the dust particles are captured by water droplets.

This causes the increase in size and weight of the dust particles and helps in quick collection.

(c) Venturi-Scrubbers

Venturi-scrubbers can clean about 400 litres of gas per minute. Generally the mist can be removed by the Venturi scrubbers followed by cyclonic separators.

It mainly consists of a Venturi-throat, through which the gas pushes at a velocity of 3400 to 12,600 m/min.

Generally the scrubbing liquid (water) is used and it is added in the direction of flow of gas at a rate of **0.3 to 1.5 litres of gas per minute.**

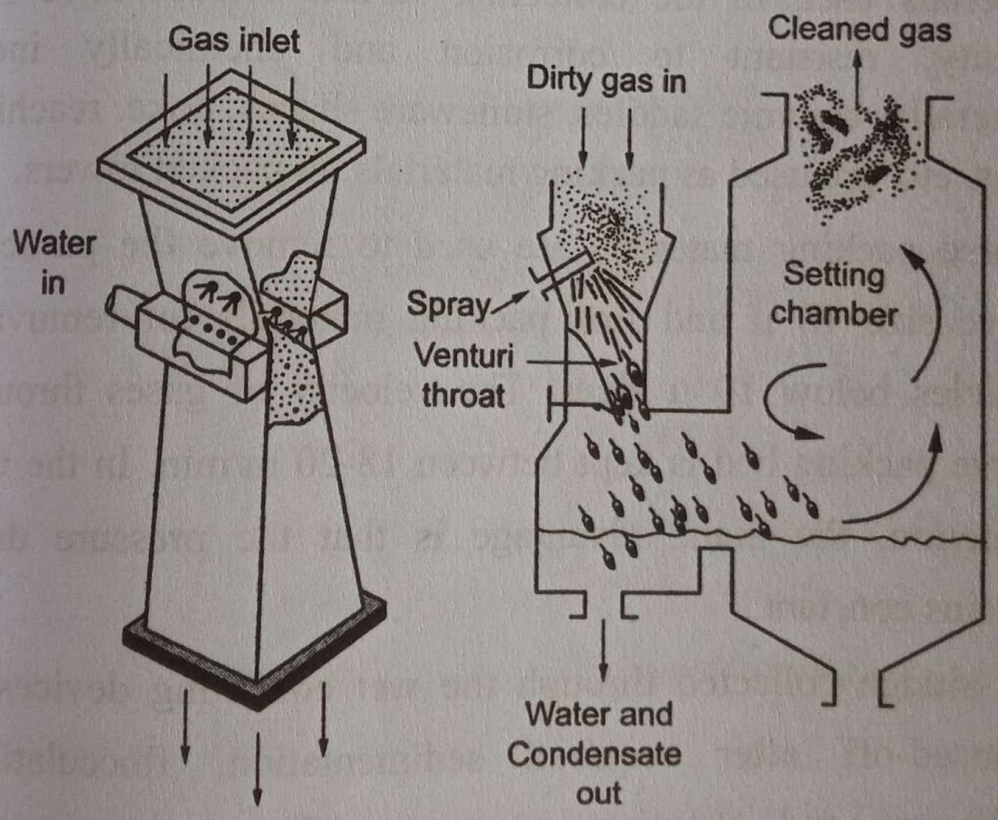

Fig. 3.11. Venturi Scrubbers

The scrubbing liquid (water) is introduced at the throat portion with nozzles. The efficiency of the venturi scrubbers varies with the input of power and it will be high up to 99% even for very small sized particles.

Venturi scrubbers can work for abrasive, corrosive and high-temperature gases, if it is made up of good quality and the suitable materials.

(d) Packed Towers

In packed tower, the dust laden gas is passed upward through the bed, keeping it clean and preventing the re-entering of the deposited particles.

The collecting surface area should be relatively large. The materials used in the collecting surface should have low density, resistant to corrosion and chemically inert. Generally, ceramic saddles, stoneware shapes, coke, reaching rings, etc. are used as packing materials, in packed towers.

Coarse packing materials are used to remove the particles above size 10 μ and fine packing materials for removing particles below 10 μ sizes. The velocity of gases through coarse packing bed is kept between 18-20 m/min. In the wet collection, the main advantage is that the pressure drop remains constant.

The sludge collected through the wet collecting devices is disposed-off after required sedimentation, flocculation, thickening and chemical treatments. The treatment and disposal of sludge is an additional process, which is required in this system.

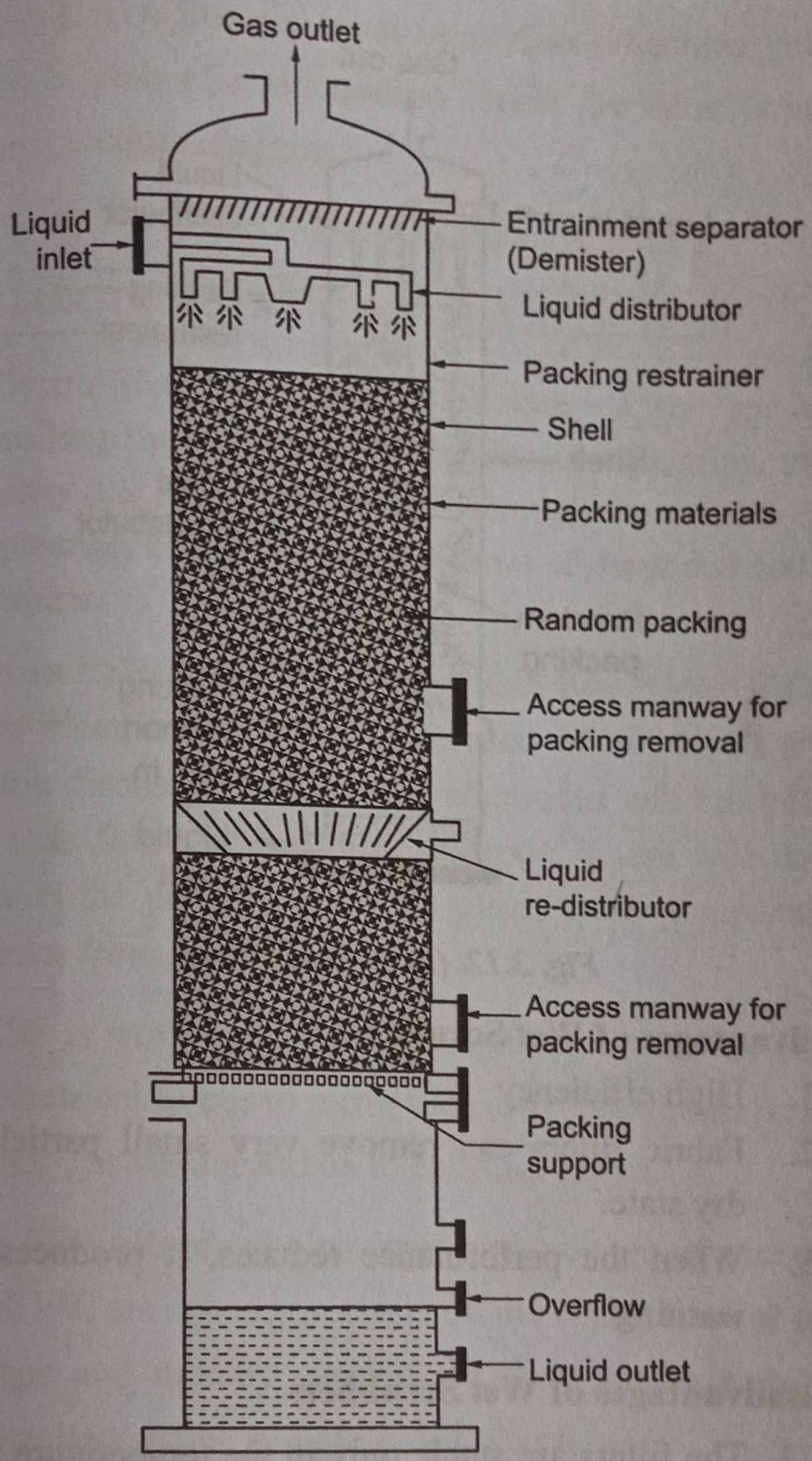

Fig. 3.12.(a) Packed Tower

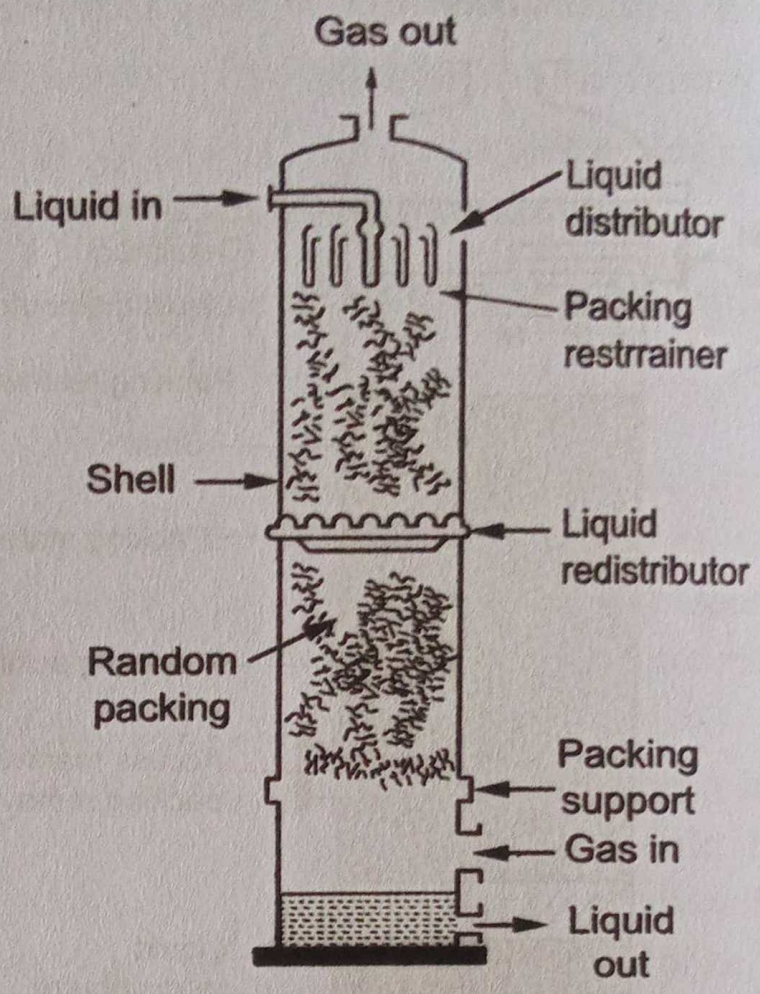

Fig. 3.12. (b) Packed Tower

I. Advantages of Wet Scrubbers

1. High efficiency
2. Fabric filters can remove very small particles in dry state.
3. When the performance reduces, it produces pre-warning

II. Disadvantages of Wet Scrubbers

1. The filters are stable only in the temperature range of 100°C to 400°C. Hence, high-temperature gases to be cooled.

2. The flue gas must be dry; as otherwise, there is a risk of condensation inside the filter, which can cause clogging.
3. The fabric is liable to chemical attack.

3.9. ELECTRO-STATIC PRECIPITATOR (ESP)

Electro-Static Precipitation is one of the methods of controlling the particulate pollutants in industries, in which the dirty gas is allowed to pass through the narrow, vertical gas passage, formed by parallel rows of grounded connecting electrodes.

In an ESP, the gas passes between two electrodes charges to an electrical potential difference of 10 to 60 kV. The electric discharge between the electrodes will emit electrons and ions from the negative electrode. These will be drawn towards the positive electrode plate, thereby separating the particles from gas stream.

ESP is working based on the principle that, the ESP uses the electrical forces to move the particulate matter, out of the flowing gas stream and on to collector plates.

In ESP, electrically insulated high voltage of wire of about 40-50 kV, are spaced precisely on the centre lines of each gas passage and thereby causing the dirty gas to pass through high-voltage wires and grounded plates.

The particulate matters are separated out from the gas with the help of electro-static forces in the powerful electric field.

Particle size of greater than 0.1 μ to 10μ can be eliminated by ESPs.

ESPs are widely used in Thermal power plants, Pulp and Paper industries, Mining and Metallurgical industries, Iron and Steel plants, Chemical industries etc.

3.9.1. Working of Electro-Static Precipitators

The working principles of electrostatic precipitators are as follows:

1. Ionization of gas

The high potential operation of this method at 40,000 V to 50,000 V cause production of billions of electrons to attack continuously with the gas molecules, which in turn becomes positive and negative ions. The visibility of blue corona represents the formation of gas ions.

2. Dust Charging

The positively charged ions returned back to the negative wire electrode and gain their electrons, whereas the negatively charged ions collide with the dust particles in the entering gas, thereby making the dust particles negatively charged.

3. Presentation of Dust

The negatively charged dust particles are derived by powerful electric forces towards the grounded positively charged plate and these are held to them. In this way, the dust

particles are collected on the collecting electrode and go on forming a thick layer. This layer gradually bleeds their negative charge to the grounded electrode. This increasing dust layer thickness gives resistance to conduction of the negatively charged ion, which is known as '**dust resistivity**'.

It has been noted that for the normal operation of an electrostatic precipitator, this dust resistivity should be in between 10^7 and 10^{11} Q/cm.

4. Collectrode Rapping

When the thickness of the dust layer increases more than 6 mm, their electrical attraction become weak. The recently deposited particles still hold the charge, because that collectrode was insulated by the dust layer. Under the above circumstances and because of the negatively charged particles on the collectrode, flash over between the wire electrode and the collectrode occurs which decreases the efficiency of the electrostatic precipitator. At this stage, a sharp rap causes the dust layer to shear away from the collectrode. This rapping results in the dust to form agglomerates and is collected in the hoppers. The high potential field recharges fine particles which are re-entrained during rapping.

> The design of an ESP for a particular application is based on characteristics of the particulate matter that affect its ability to be collected and the gas volume flow rate.

For obtaining maxi-mum efficiencies, most of the electrostatic precipitators should be operated at gas velocities of 1 to 2 m/sec and at 100°C and 150°C temperature.

The **drift velocity** (or **axial drift velocity**) is the flow velocity of a particle or electron attains in a material due to an electric field, in an ESP.

Table 3.1. Drift Velocity

Sl. No	Equipments	Particulates Removal
1.	ESP	Fine dusts and fumes about 1 μm or less
2.	Filters	Fine dusts and fumes 1 μm or less
3.	Wet Scrubbers	Fine particles of about 1μm
4.	Cyclones	Larger particles of about 10 μm to 100 μm
5.	Settling chambers	Coarse particles larger than 100 μm to 150 μm

3.9.2. Classification of ESP

ESPs are classified based on the supply and working voltage and are as follows.

1. High Voltage ESPs
   - (*a*) Tubular type
   - (*b*) Plate type
2. Low Voltage ESPs

I. High-Voltage Precipitators

High voltage precipitators are suitable for both solid and liquid particulate collection and are used in smelters, steel furnaces, petroleum refineries, cement kilns, power plants etc. They are of two types.

(*a*) Tubular type

(*b*) Plate type

(a) Tubular Precipitator

The tubular precipitator normally has pipe electrode. Its diameter varies from 50mm to 300mm and the length varies from 2 m to 5 m.

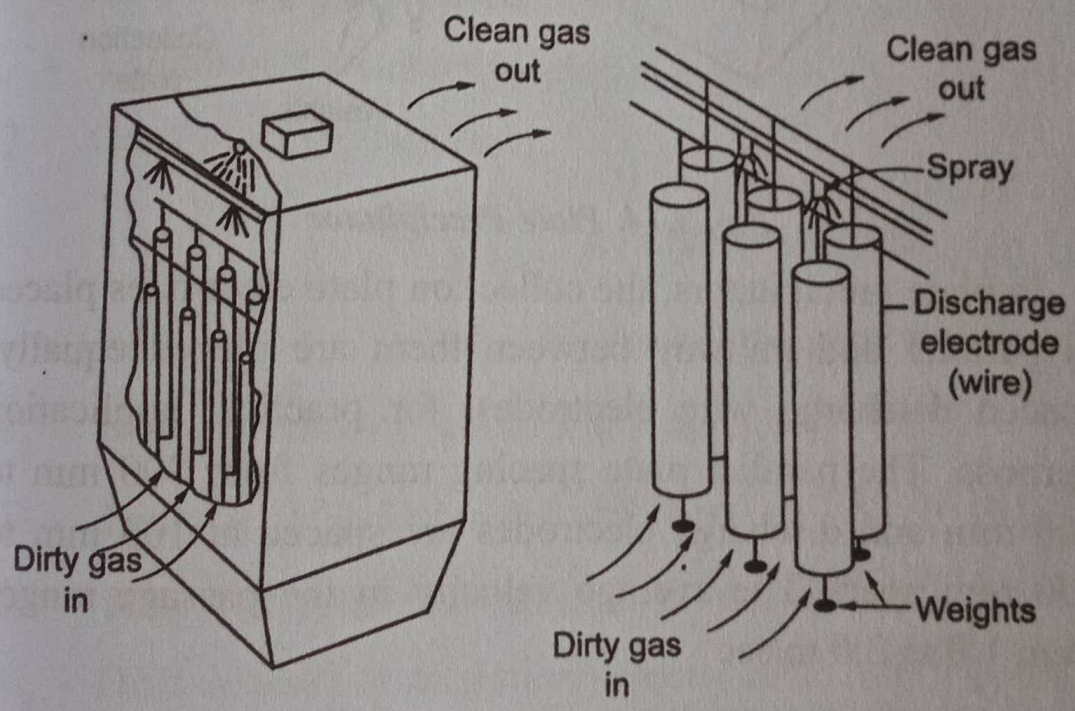

Fig. 3.13. Tubular Precipitator

The gas velocity normally varies between 1.3 m/sec. These precipitators have high collection efficiency, but the

dust removal from pipes become hard. The gas normally flows from below upwards

(b) Plate Precipitator

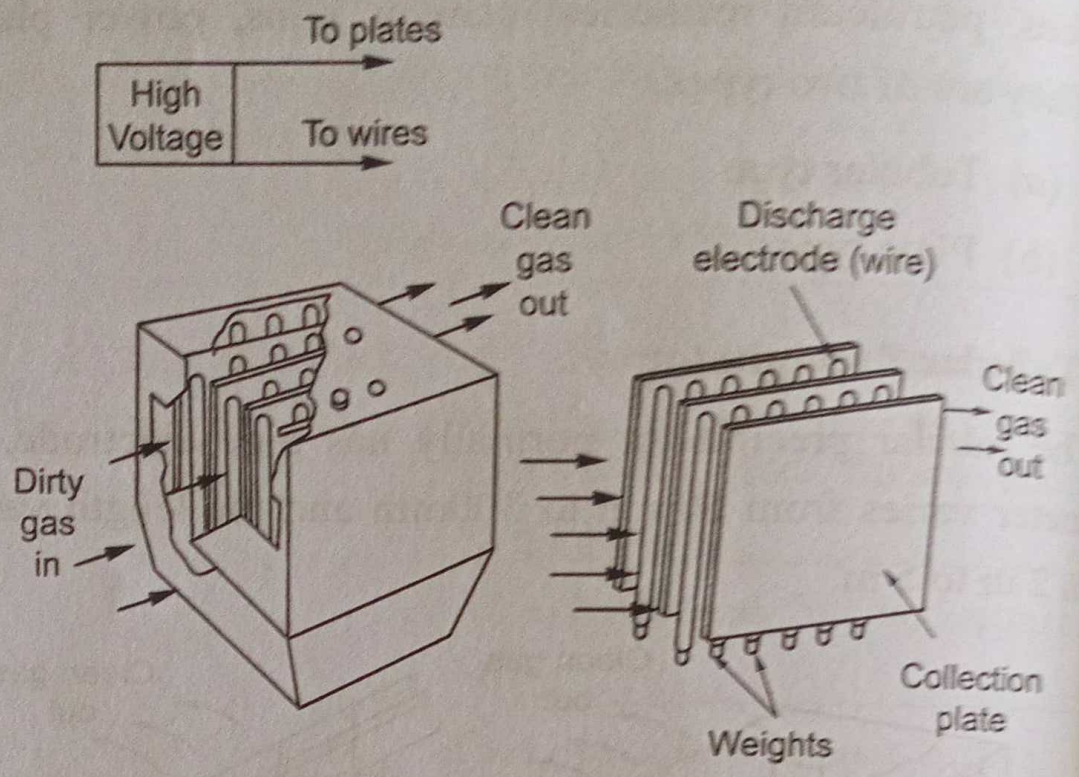

Fig. 3.14. Plate Precipitator

In plate precipitators, the collection plate electrodes placed in parallel and midway between them are placed equally-spaced discharge wire electrodes, for practical application purpose. The parallel plate spacing ranges from 200 mm to 400 mm and discharge electrodes are spaced at 100 mm to 400 mm apart. The average velocity in the passage ranges from 1.0 to 2.0 m/sec

II. Low-Voltage Precipitators

These ESPs are primarily used for the control of finely divided particles, which drain radially along the collection electrode, operated in two stages. In the first stage, the discharge electrodes have current potential of 12 kV to 13 kV

to provide corona discharge. The second stage consists of parallel metal plates spaced 20 to 25 mm apart. Alternate plates are charged positively and negatively with 6 to 6.5 kV.

3.9.3. Design and Performance of Electro-Static Precipitator

The efficiency of the electro-static precipitator may be estimated by using the following formula,

$$\eta = 1 - \exp \frac{(-V_p A_c)}{Q}$$

Where,

A_c - Area of collecting electrode, m^2

= 2HL for parallel plate ESP

= πDL for cylindrical ESP

L - Length of the collecting electrode

Q - Gas Flow rate (Nm^3/sec)

$$= \frac{\pi D^2}{4 \times V_g} \text{ for Cylindrical ESP}$$

$$= H_S \times V_g \text{ for parallel plate ESP}$$

V_g - Inlet gas velocity (about 1 to 3 m/sec)

D - Diameter of cylinder (0.1 to 0.5 m)

S - Height of collecting electrode (2 to 6 m)

V_p - Drift velocity or migration velocity (0.05 to 0.2 in/sec)

Migration velocity (V_p) is the important parameter in the design of ESP.

The efficiency of ESP varies from 90 to 99%.

It depends on various operational quantities like electric field strength, viscosity of gas and dielectric, particle size and resistivity properties of the dust.

The drift velocity is normally given by,

$$V_{pm} = a \times dp$$

where, 'dp' - diameter of the particle

a - constant

Thus V_{pm}, is more if diameter of the particle is more.

Normally, it ranges from 0.05 to 0.2 m/sec.

The constant 'a' depends on the voltage applied, properties of gas and the ability of the particle to accept an electric charge. Normally, drift velocity is measured experimentally for a given system.

3.9.4. Advantages of ESP

Following are the advantages of ESP

1. High collection efficiency (upto 99%).
2. Less moving parts and easy operation,
3. Withstand high temperatures (upto 750° C)
4. High gas holding capacity (upto 10^6 m^3/hour)
5. Collection of very small particles (as small as 0.1 micron)
6. Small pressure drops (0.25 to 1.25 cm of water)
7. Wet or dry particles can be collected.
8. Treatment time is negligible (0.1 to 10 seconds).

9. There is no limit to solid, liquid or corrosive chemical usage.

10. Less maintenance and operating cost etc.

3.9.5. Disadvantages of ESP

Following are the disadvantages of ESP.

1. High initial cost
2. Collection efficiency reduces with time
3. Special trained persons are required to work at high voltage handling
4. Pre-requirement of pre-cleaner, like cyclones are required
5. Applied only to liquid and solid phase pollutants
6. Sensitive to variable dust loadings and flow rate.
7. Not suitable for explosive gases.
8. It is not good, where the particles have high electrical resistivity.
9. Space requirement is more because of the large size of the equipment.
10. The poisonous gas, ozone is produced by the negatively charged discharge electrodes during gas ionization.

> The main issues affecting the control efficiency of an ESP are the design of the device and proper maintenance.

3.9.6. Industrial Applications of ESPs

The important applications of electrostatic precipitators in industries are given in the following table 3.2.

Table 3.2. Industrial applications of ESPs

Sl.No	Industry	Application
1.	Cement Factories	- Cleaning of flue gas from cement kilns - Recovery of cement dust from kilns
2.	Pulp and paper	- Soda-fume recovery in kraft pulp mills
3.	Steel plants	- Cleaning blast furnace gas - Removing tars from coke oven gases - Cleaning open hearth and electric furnace gases
4.	Chemical industries	- Collection of SO., phosphoric acid mist - Cleaning various types of gases i.e., hydrogen, CO_2, SO_2. - Removing dust from elemental phosphorus in the vapour state
5.	Petroleum industry	Recovery of catalyst dust
6.	Carbon black industry	Agglomeration and collection of carbon black
7.	Thermal power plants	Collecting fly ash from coal fired boilers

TWO MARKS QUESTIONS AND ANSWERS

1. ***State the objectives of using air pollution control?***
(April/May 2015) (April/May 2017) (Nov/Dec 2017)

The important objectives of the air pollution control are as follows.

1. Controlling of effects of air pollution on public
2. Protection of animals, plants, etc.
3. Protection of properties against pollutants attack
4. Providing the acceptable environment etc.

2. ***What is absorption?*** ***(Nov/Dec 2011)***

Absorption is also a natural process, in which gaseous and particulate matters of air pollutants are collected either by mist or rain and settle down with mist or rain.

3. ***What is adsorption?*** ***(May/June 2012) (Nov/Dec 2016)***

Adsorption is the physical process of collecting the gaseous, liquid and solid air pollutants in the air by a surface, where they are concentrated and retained.

4. ***Differentiate Adsorption and Absorption.***
(Nov/Dec 2015) **(Nov/Dec 2017) (April/May 2018)**

Adsorption is the physical process of collecting the gaseous, liquid and solid air pollutants in the air by a surface, where they are concentrated and retained.

Absorption is also a natural process, in which gaseous and particulate matters of air pollutants are collected either by mist or rain and settle down with mist or rain.

5. ***Write the fundamental approaches of controlling air pollution.*** ***(May/June 2014)***

The air pollutants can be controlled by the following two methods.

1. By changing the raw materials in industries
2. By installing suitable air pollution control equipments.

6. ***What are pollution control equipments? (Nov/Dec 2012) Or List out the equipment to control particulate air pollutant. (May/June 2012) (May/June 2016)***

[OR]

Write any two pollution control equipments.

(Nov/Dec 2016)

Following are the important equipment used to control the particulate matter.

1. Gravitational Settling Chambers
2. Centrifugal Collectors (Dynamic precipitators, cyclone collectors, etc.)
3. Wet Scrubbers (or) Wet Collectors (Spray towers, Wet Cyclone Scrubbers, Venturi-Scrubbers etc.)
4. ESP (Electro-Static Precipitators)
5. Fabric Filters

7. ***List the principles of control of particulate matter.***

(Nov/Dec 2015)

Particles are collected by a combination of several mechanisms. The available mechanisms are **gravitational settling, centrifugal impaction, inertial**

impaction, direct interception, diffusion and the **electrostatic attraction.**

8. ***What is meant by pollution control by fugitive emission containment?*** ***(May/June 2013)***

Uncontrolled (Fugitive) emission is defined as the emissions from the leaks of faulty and damaged joints, flanges, valves and openings during material and energy transferring, recycling, packaging (and product removal) and storage. This emission is also called as **diffuse emission.**

9. ***Write the formula to calculate the efficiency in gravitational settling chamber?*** ***(May/June 2016)***

Efficiency, 'η' = $1 - e^{(-n\mathrm{LWV}t/\mathrm{Q})}$

10. ***Write the collection Mechanism of scrubbers.*** ***(Nov/Dec 2017)***

Inertial separators collect the particles by changing the direction of motion of the flowing gas, in such a way that the particle cross over the gas steam lines and the particles are either concentrated into a small part of the gas flow or are separated by impingement onto a surface.

11. ***Define stokes law.*** ***(Nov/Dec 2018)***

Stokes's law, states the settling velocities of small spherical particles in a fluid medium.

The terminal settling velocity can be calculated by using the Stoke's law,

$$V_t = g d_p^2 \frac{(\rho_p - \rho_g)}{18\mu_g}$$

12. ***List the advantages of gravity settling chamber.*** ***(April/May 2018)***

1. Simple design, easy installation and maintenance
2. Less pressure losses
3. Low initial cost
4. Dry and continuous disposal of solid particles

13. ***What are particulates removal mechanisms in filters?*** ***(Nov/Dec 2014)***

The use of fabric filters is based on the principle of filtration, which is the separation of solids from fluids (gases) by interposing a medium through which only the fluid can pass.

The mechanisms by which the particles come into contact with the fibers in the filter media are **Straining (sieving), Interception, Diffusion, Inertial separation** and **Electrostatic attraction.**

14. ***What is scrubbing?*** ***(Nov/ Dec 2012)***

Scrubbing is the air pollution control technique, used to remove some particulate and/or gases from industrial air stream.

15. ***What is wet scrubbing?*** ***(May/June 2012)***

Wet scrubbing is defined as the air pollution control technique, used to clean air, fuel gas, or other gases of various pollutants and dust particles with the scrubbing liquid (generally water).

16. *What are the advantages of scrubbers? (Nov/Dec 2014)*

1. High efficiency
2. Fabric filters can remove very small particles in dry state.
3. When the performance reduces, it produces pre-warning

17. *What is the principle of Electrostatic precipitator? (Nov/Dec 2011) (Nov/Dec 2018)*

ESP is working based on the principle that, the ESP uses the electrical forces to move the particulate matter, out of the flowing gas stream and on to collector plates.

18. *State the particulate size which can be removed in a settling chamber and an ESP. (May/June 2013)*

- ✓ Particle size of about 50 μm can be removed by gravitational settling
- ✓ Particle size of greater than 0.1 μ to 10μ can be eliminated by ESPs.

19. *Define "drift velocity". (Nov/Dec 2014)*

The **drift velocity** (or axial drift velocity) is the flow velocity of a particle or electron attains in a material due to an electric field, in an ESP.

20. *What are the advantages of ESP? (Nov/Dec 2017)*

1. High collection efficiency (upto 99%).
2. Less moving parts and easy operation,
3. Withstand high temperatures (upto 750° C)

REVIEW QUESTIONS

1. ***List the factors influencing the choice of air pollution control equipment. (8) (May/June 2013) (8) (Nov/Dec 2017) (6) (May/June 2016)***

   [OR]

   Explain the process of selection of air pollution control equipment. (8) (Nov/Dec 2015) (8) (Nov/Dec 2016)

   Refer Chapter 3.1.3 Page 3.2

2. ***What are the various air pollution control strategies? (Nov/Dec 2012) (April/May 2017)***

   Refer Chapter 3.2 Page 3.8

3. ***Briefly discuss about the air pollution controlling methods at source. (May/June 2014)***

   Refer Chapter (1) 3.2 and 3.3.1 Page 3.8 and 3.10

4. ***Explain any three air pollution control measures. (Nov/Dec 2018)***

   Refer Chapter 3.2 and 3.3 Page 3.8 and 3.10

5. ***Discuss the different mechanism on control of gaseous pollutants. Explain any two in detail. (16) (April/May 2018)***

   [OR]

   Discuss the collection mechanism and controlling methods of gaseous pollutants from Industries. (16) (Nov/Dec 2016)

   Refer Chapter 3.3 Page 3.10

6. ***Make a note on air pollution control by process change and raw material change. (6) (Nov/Dec 2014)***

   Refer Chapter 3.2 (1) Page 3.8

7. ***Explain the principle of operation and working of a settling chamber. How its efficiency can be improved? (May/June 2013) (Nov/Dec 2017)***

   Refer Chapter 3.4 Page 3.16

8. ***Draw the cyclone showing the design proportions and explain its working principle, advantages and limitations. (10) (Nov/Dec 2014)***

   Refer Chapter 3.6 Page 3.25

9. ***How does air pollution by particulate matters be controlled by employing surface filters? Bring out the merits and demerits. (Nov/Dec 2011)***

   Refer Chapter 3.7 Page 3.31

10. ***What are filter bags? Explain their working and operating problems. (8) (May/June 2012) (8) (May/June 2013)***

    [OR]

    How does a bag house filter work? What are the positives and negatives of filtration process? (Nov/Dec 2012) (10) (April/May 2017) (Nov/Dec 2017)

    Refer Chapter (3.7) Page 3.31

11. ***What are inertial separators? State the types and explain any one. (May/June 2013)***

    Refer Chapter 3.8.1. Page 3.35

12. ***Briefly describe the collection mechanism take place in a scrubber. (6) (Nov/Dec 2014) (8) (Nov/Dec 2018)***

    Refer Chapter 3.8 Page 3.35

13. ***What are wet collectors? Discuss the advantages and drawbacks of wet collectors and mention the salient***

features of spray towers, wet cyclone and venturi scrubber. (April/May 2015)

Refer Chapter 3.8 Page 3.35

14. ***What are the scrubbing devices in pollution control? Explain with a neat sketch. (8) (Nov/Dec 2012)***

Refer Chapter 3.8 Page 3.35

15. ***What is a cyclone separator? Explain its working principle. (8) (Nov/ Dec 2012)***

Refer Chapter (a) 3.8.2. Page 3.36

16. ***What is the principle of ESP? Explain its working principle and the factors influencing its performances?***

(8) (Nov/Dec 2012) (8) (May/June 2012) (16) (May/June 2012, R-2004) (10) (Nov/Dec 2014) (16) (Nov/Dec 2015) (10) (May/June 2016) (8) (Nov/Dec 2016) (9) (April/May 2017) (16) (Nov/Dec 2017) (16) (April/May 2018)

[OR]

What is the working principle of ESP? Explain the components in it and its working and design factors.

(8) (Nov/ Dec 2012)

Refer Chapter 3.9 Page 3.43

□□□