Machine Translation
Attention Mechanism

Radoslav Neychev

Outline

- Machine Translation historical overview
  - Statistical Machine Translation
  - Word alignments
- Neural Machine Translation (NMT)
  - Seq2Seq
  - Beam Search
- Attention mechanism

Inspired by: http://web.stanford.edu/class/cs224n/slides/cs224n-2019-lecture08-nmt.pdf

Historical overview

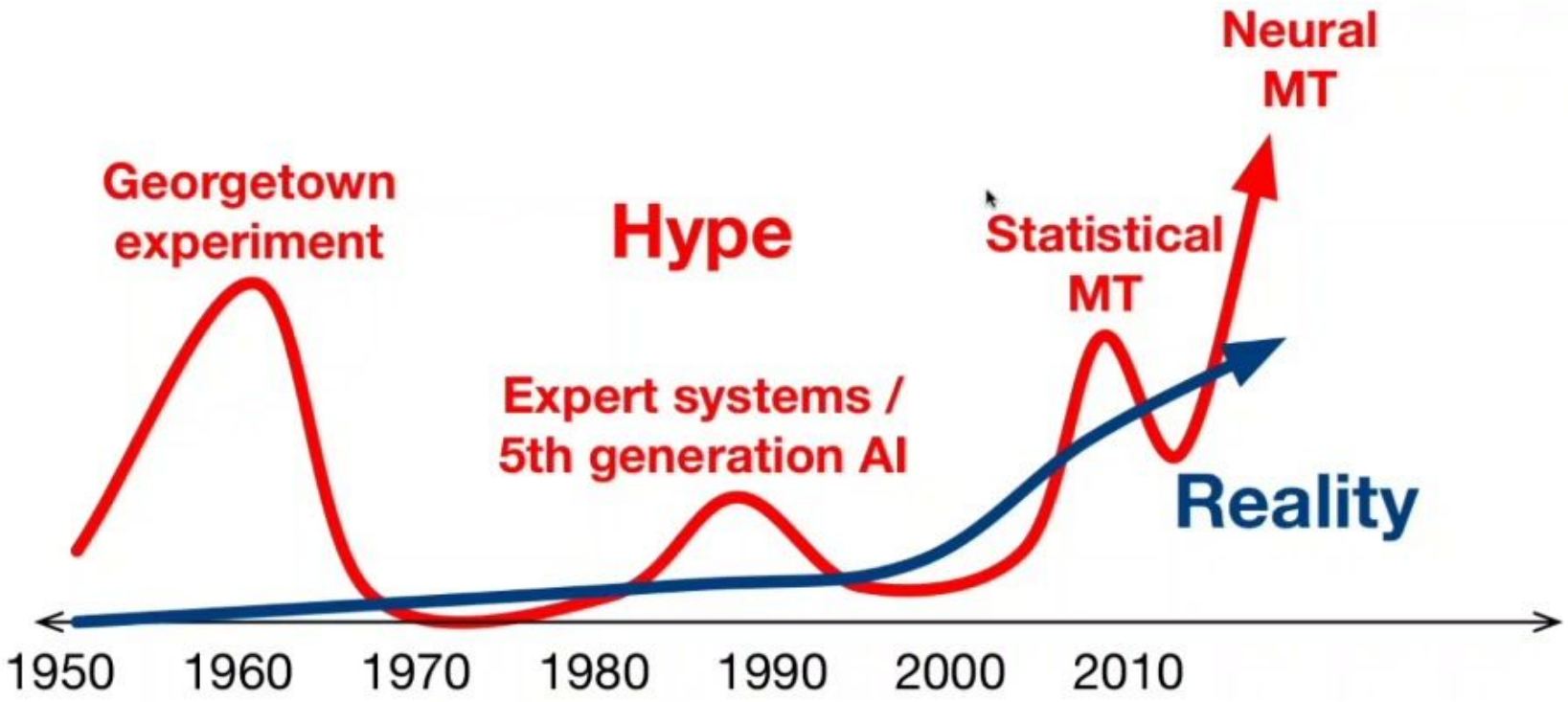

Before Deep Learning

1950s: first Machine Translation

- Georgetown experiment (7 Jan 1954)
  - Automatic Russian-English translation of 60 sentences
  - 250 vocabulary articles
  - 6 grammar rules
  - Calculated on Mainframe IBM 701
- The same experiment in the USSR (1954 too)
  - Rule-based translation
  - Calculated on BESM

MT Training Data

- Parallel corpora
  - Pairs <source, translation>
  - Typically sentence-level (although sometimes can be paragraph- or doc-level)
  - Can be manually curated by translators, crawled from web or synthetic

Source	角柱を過ぎる粘性流体の乱流をラージエディシミュレーションし， フイルタ幅と数値粘性の影響を調べた。
Reference	The large eddy simulation of a turbulent flow of a viscous fluid passing through a square column was conducted, and the effects of the filter width and numerical viscosity were examined.

1990-2010: Statistical Machine Translation

Want to find best English sentence y, given French sentence x

Let's use Bayes Rule to break this down into two components:

$$\text{argmax}_y P(y|x)$$
$$= \text{argmax}_y \underbrace{P(x|y)}_{} \underbrace{P(y)}_{}$$

Translation Model

Models how words and phrases should be translated (*fidelity*). Learnt from parallel data.

Language Model

Models how to write good English (*fluency*). Learnt from monolingual data.

Source: http://web.stanford.edu/class/cs224n/slides/cs224n-2019-lecture08-nmt.pdf

1990-2010: Statistical Machine Translation

How to learn translation model from the parallel corpus?

Let's calculate

$$P(x, a|y)$$

Where **a** is an **alignment** (word-level correspondence between French sentence x and English sentence y)

1990-2010: Statistical Machine Translation

Alignment can be: **many-to-one**

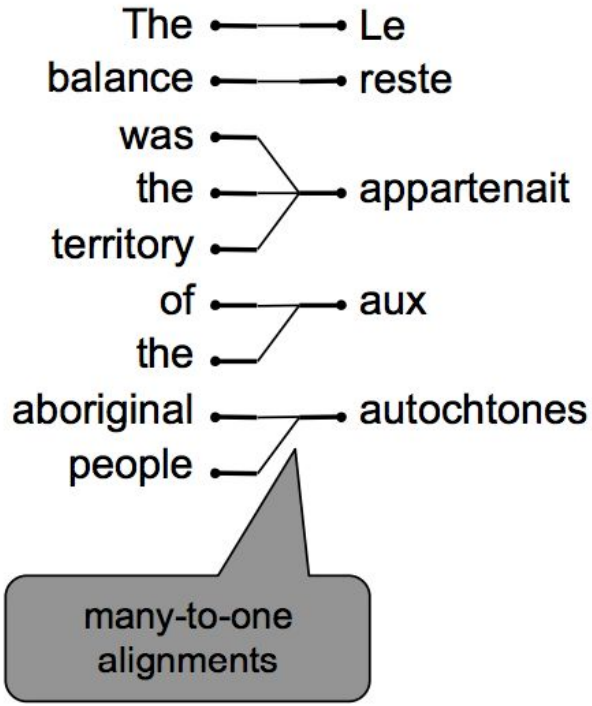

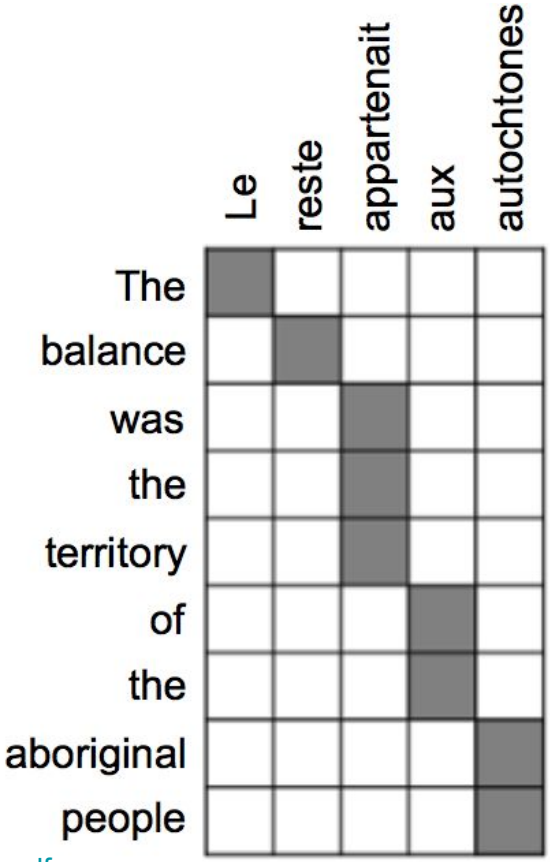

Source: http://web.stanford.edu/class/cs224n/slides/cs224n-2019-lecture08-nmt.pdf

Alignment can be: **one-to-many**

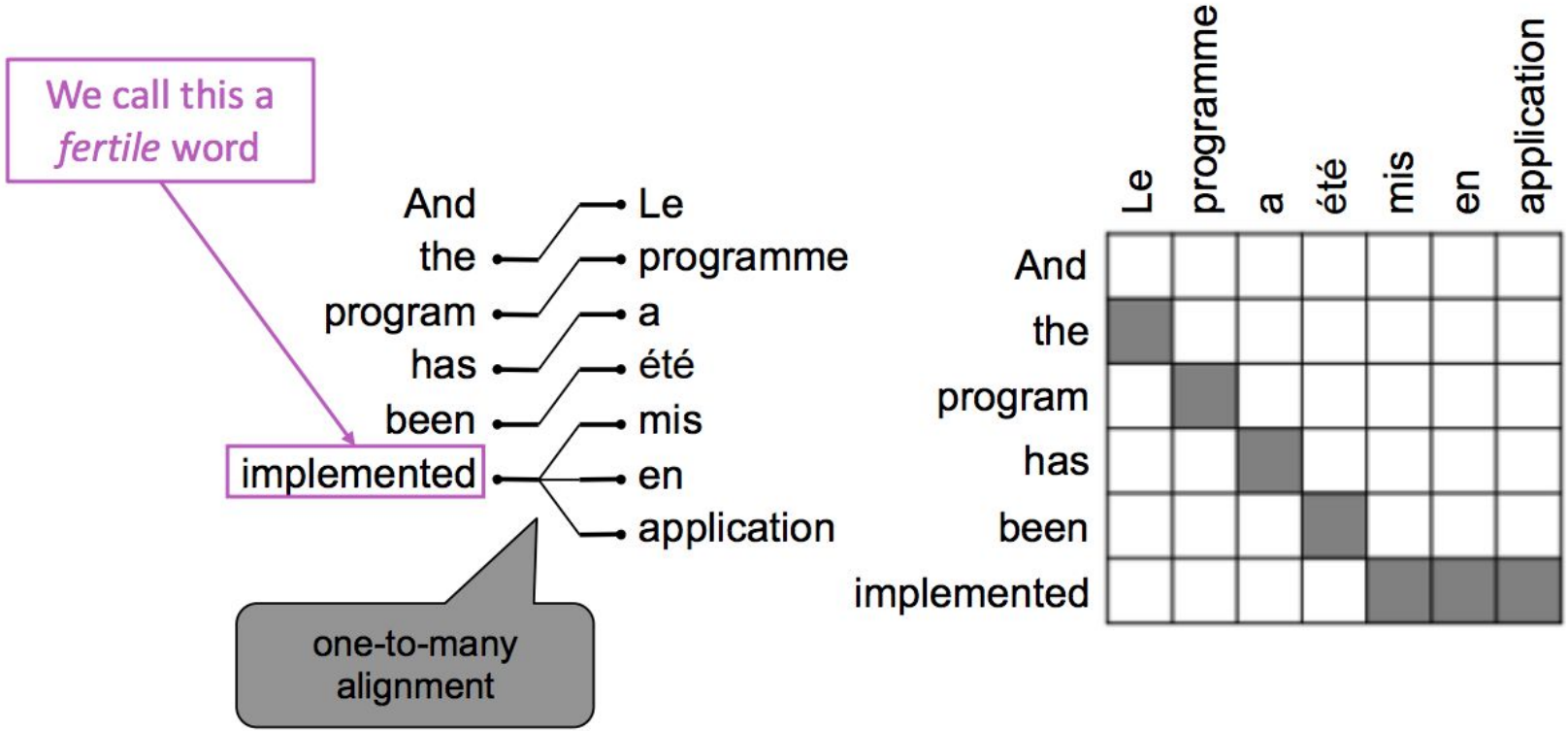

Source: http://web.stanford.edu/class/cs224n/slides/cs224n-2019-lecture08-nmt.pdf

1990-2010: Statistical Machine Translation

Some words are very fertile!

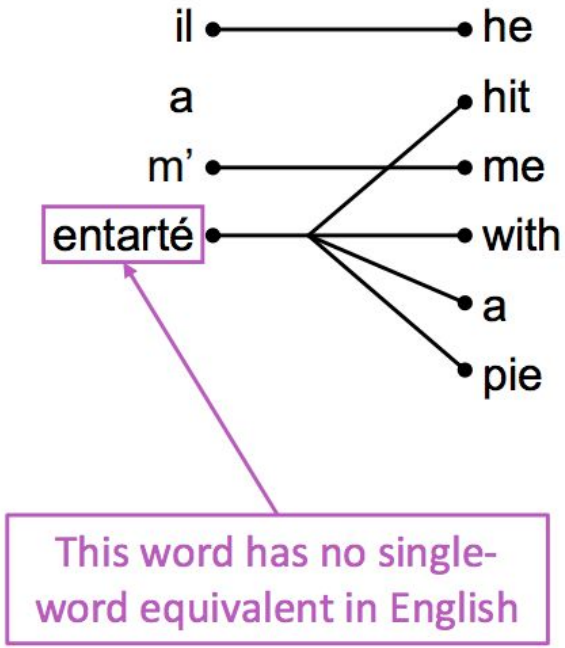

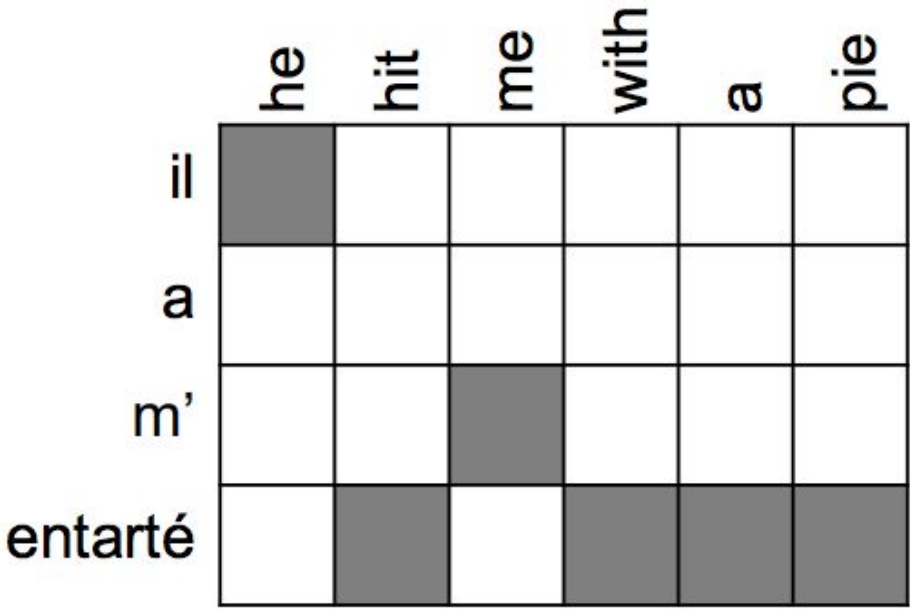

Source: http://web.stanford.edu/class/cs224n/slides/cs224n-2019-lecture08-nmt.pdf

1990-2010: Statistical Machine Translation

Alignment can be: **many-to-many**

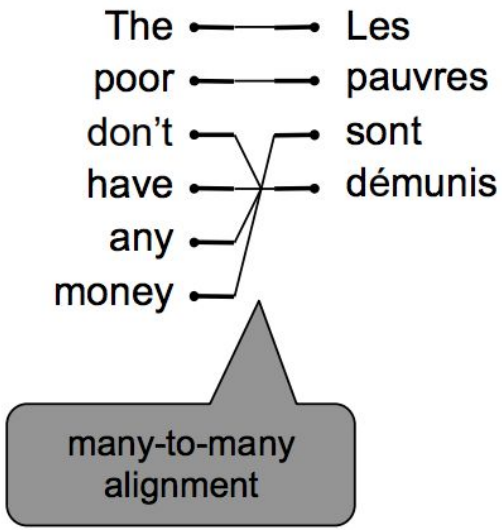

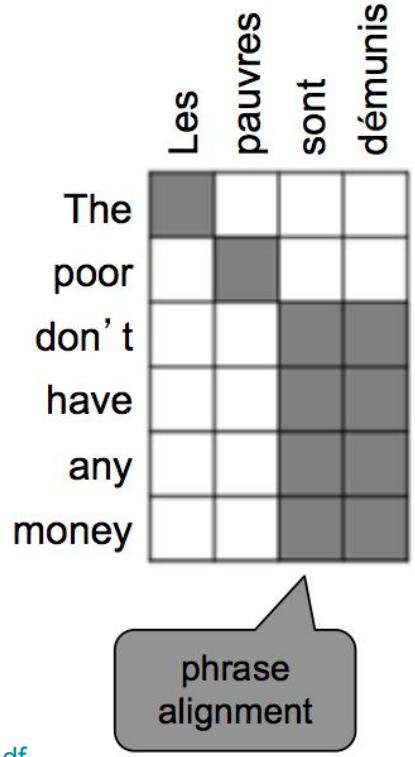

Source: http://web.stanford.edu/class/cs224n/slides/cs224n-2019-lecture08-nmt.pdf

1990-2010: Statistical Machine Translation

$$\underbrace{\text{argmax}_y}\,\underbrace{P(x|y)}_{\text{Translation Model}}\,\underbrace{P(y)}_{\text{Language Model}}$$

Question:
How to compute this argmax?

Enumerate every possible y and calculate the probability? No!

Use a heuristic search algorithm to search for the best translation, discarding hypotheses that are too low-probability

Source: http://web.stanford.edu/class/cs224n/slides/cs224n-2019-lecture08-nmt.pdf

PBMT

- PBMT: phrase-based machine translation
  - N-Gram phrase table
  - N-Gram language model

Phase tables

Source language
N-Gram
I saw a cat

Target language N-Gram
set // -logP

Я видел кошку // 4.5
Я увидел кошку // 9.8
Я видел кошечку // 8.2

PBMT

- PBMT: phrase-based machine translation
  - N-Gram phrase table
  - N-Gram language model

NGram LM's

Source language
N-Gram // -logP
(next | prefix)

I saw a cat
I saw a dog
I saw a bicycle

PBMT

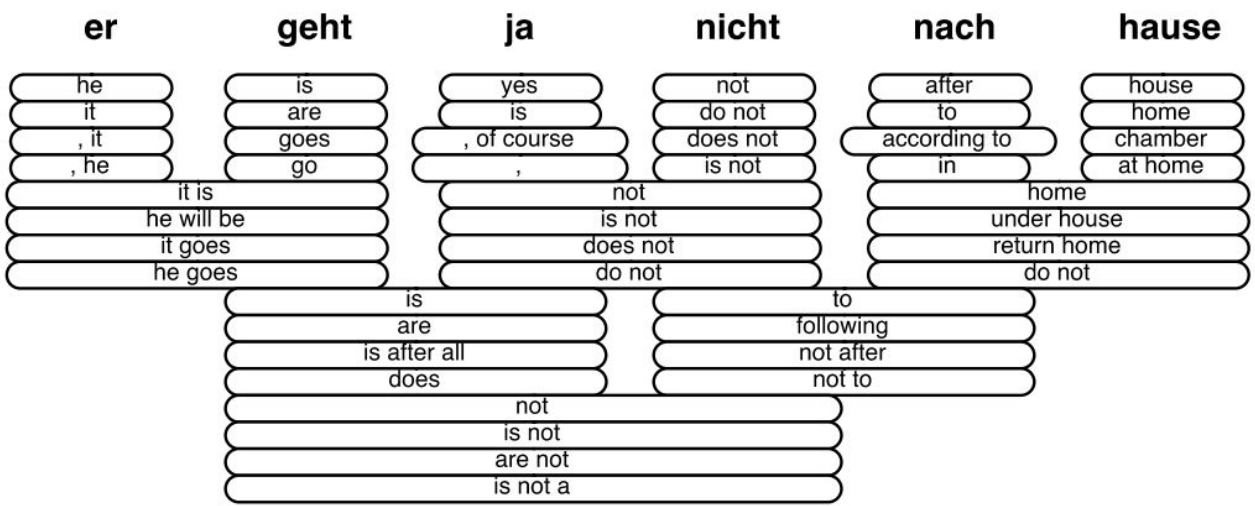

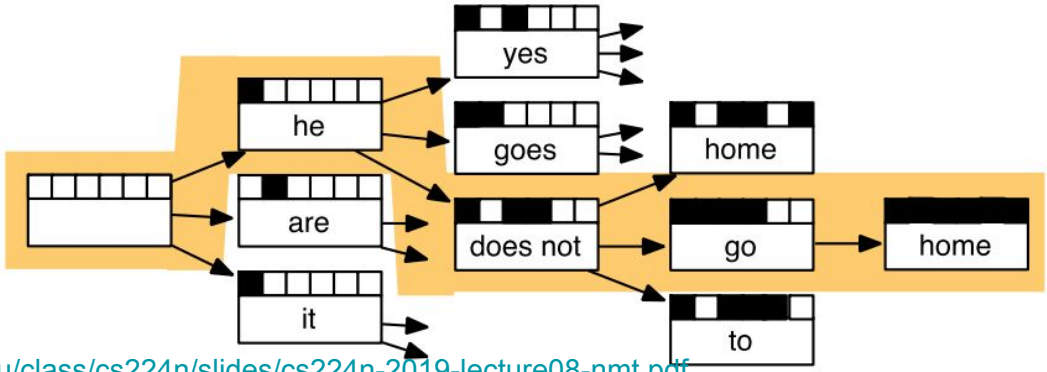

Source: http://web.stanford.edu/class/cs224n/slides/cs224n-2019-lecture08-nmt.pdf

1990-2010: Statistical Machine Translation

- Systems had many separately-designed subcomponents
- Lots of feature engineering
- Need to design features to capture particular language phenomena
- Require compiling and maintaining extra resources (tables of equivalent phrases)
- Lots of human effort to maintain
- Repeated effort for each language pair!

Neural Machine Translation

What is Neural Machine Translation?

- Neural Machine Translation (NMT) is a way to do Machine Translation with a single neural network

- The neural network architecture is called sequence-to-sequence (aka **seq2seq**), it involves two **RNNs**

Seq2seq NMT

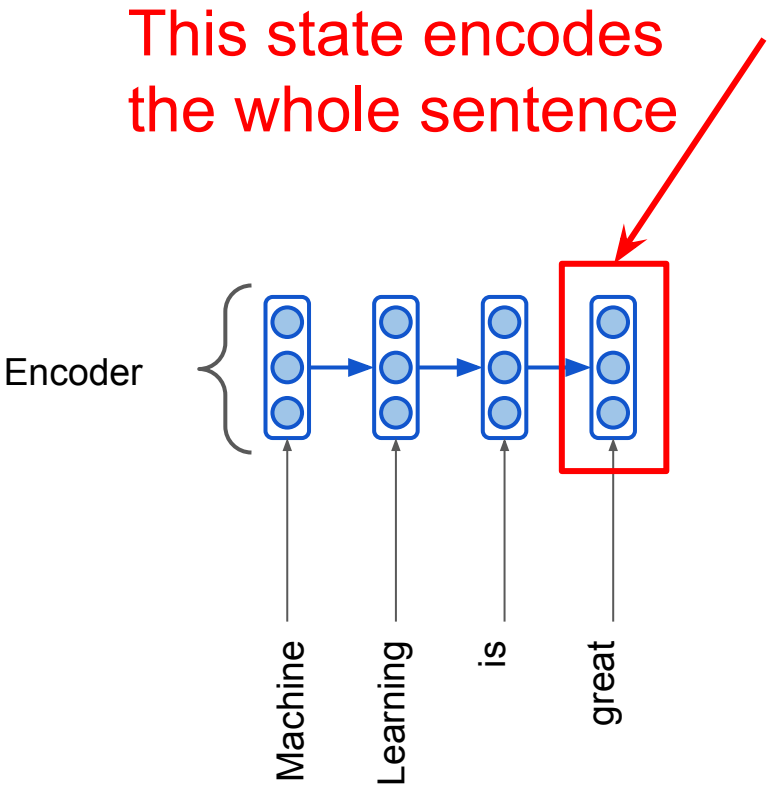
This state encodes
the whole sentence
Encoder
Machine
Learning
is
great

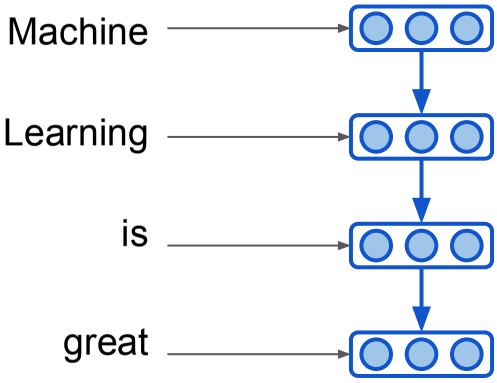
Machine
Learning
is
great

Seq2seq NMT

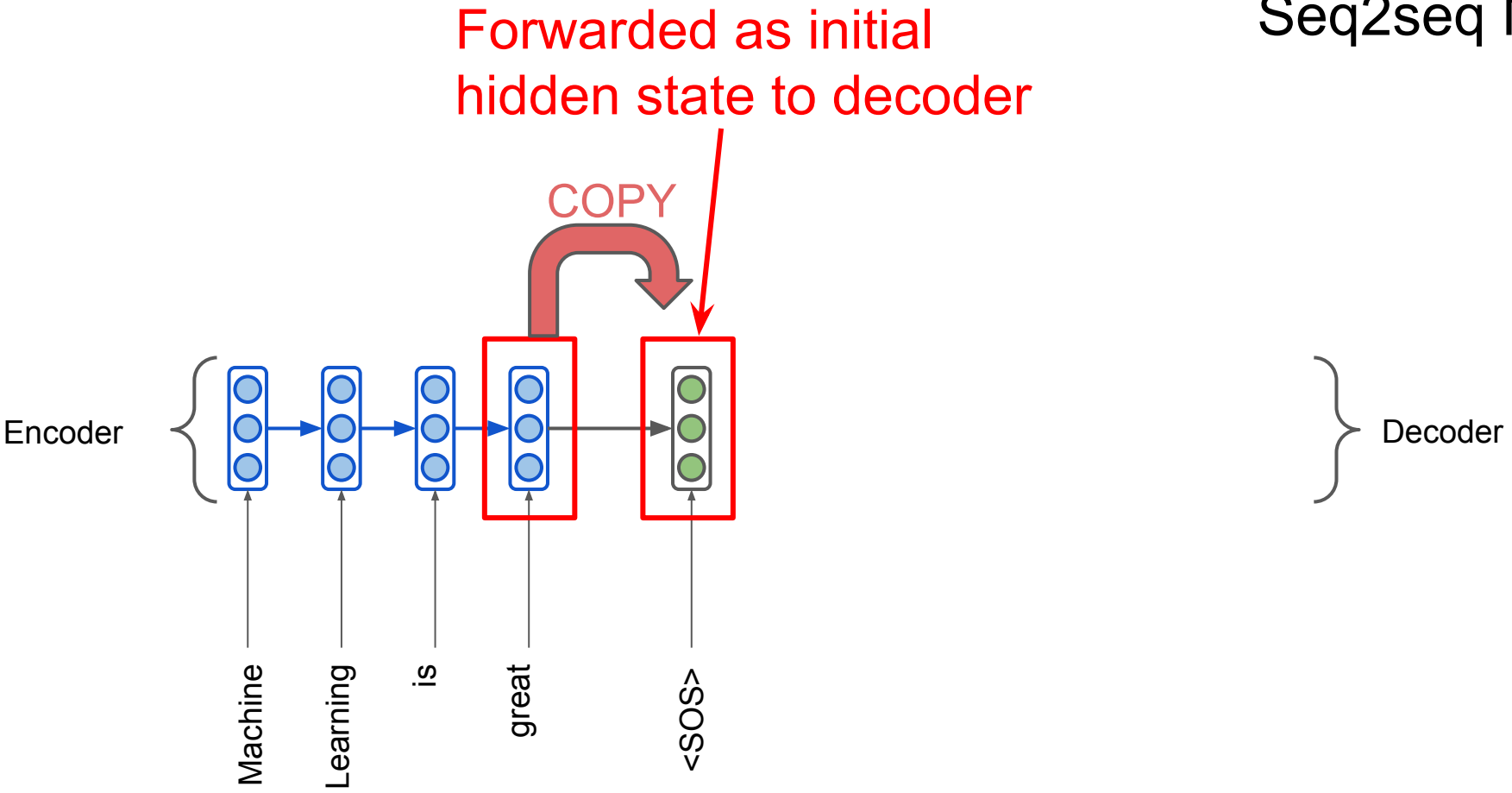
Forwarded as initial hidden state to decoder
COPY
Encoder
Decoder
Machine
Learning
is
great
<SOS>

Seq2seq NMT

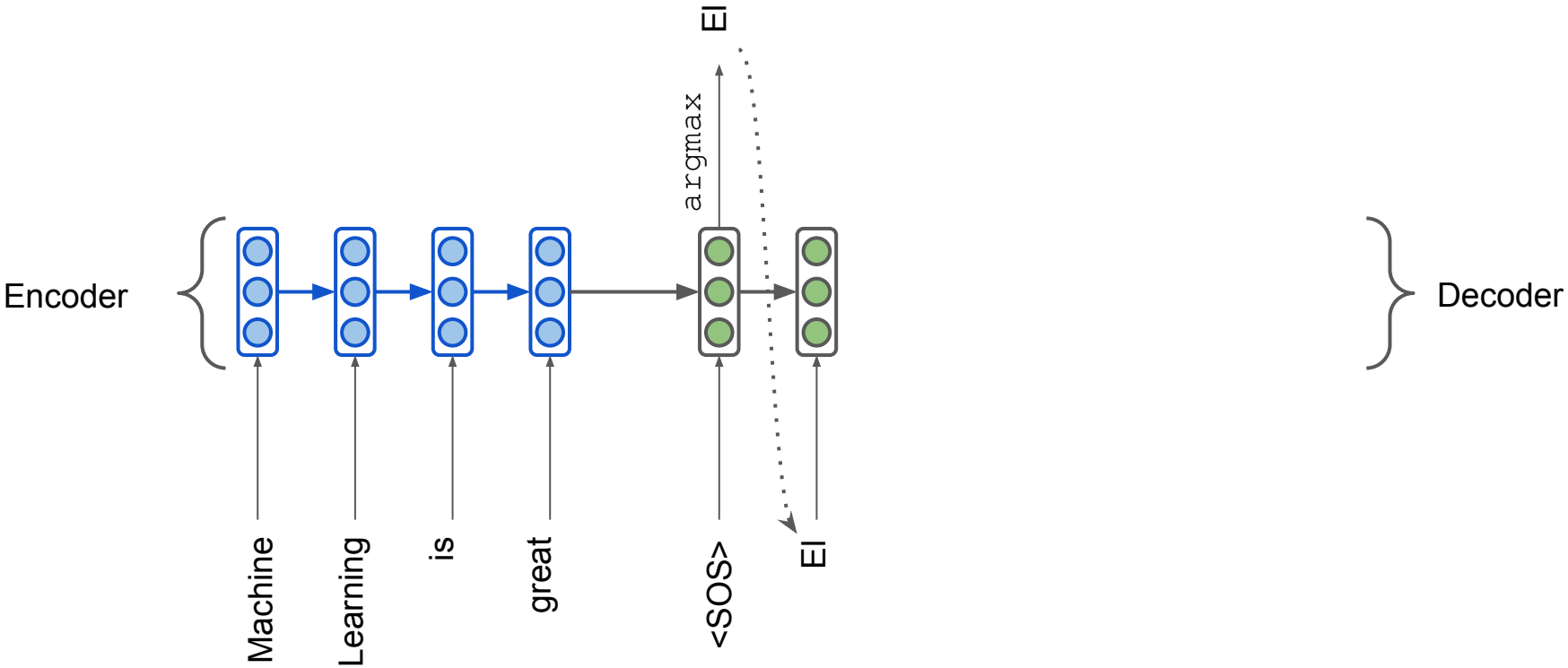

Seq2seq NMT

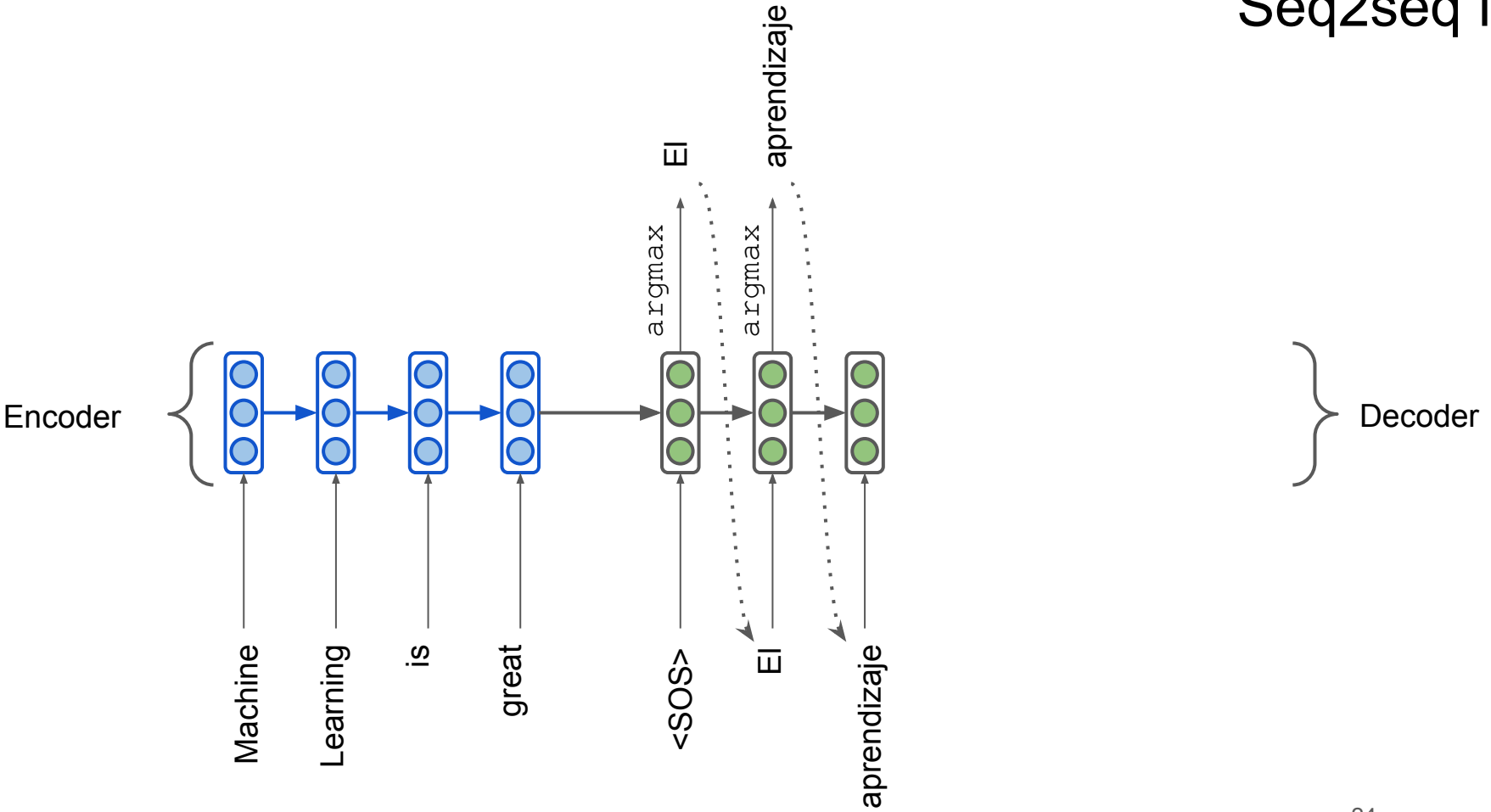
Encoder
Machine
Learning
is
great
<SOS>
argmax
El
argmax
aprendizaje
El
aprendizaje
Decoder

Seq2seq NMT

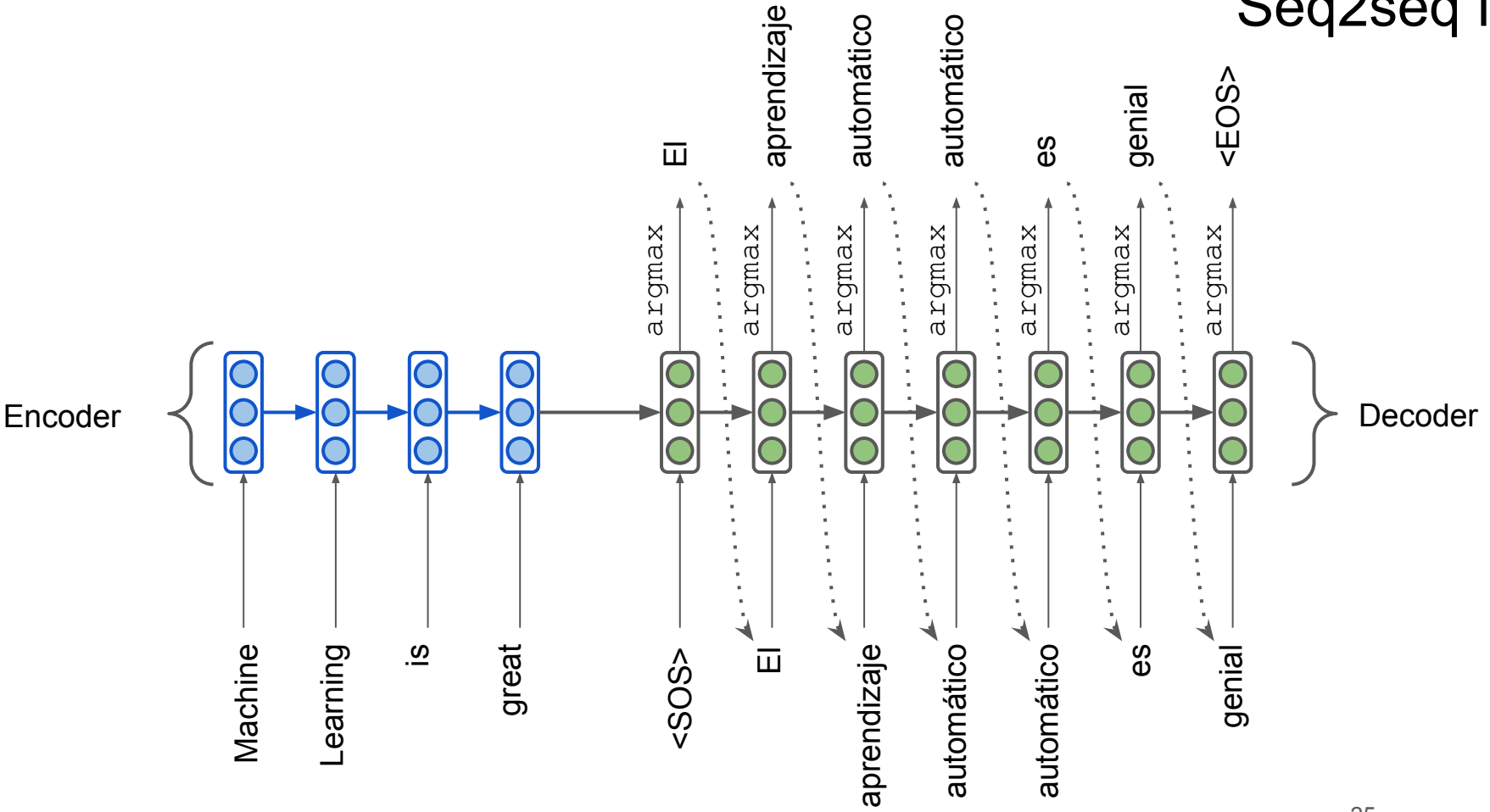
Encoder
Machine
Learning
is
great
<SOS>
argmax
El
El
argmax
aprendizaje
aprendizaje
argmax
automático
automático
argmax
automático
automático
argmax
es
es
argmax
genial
genial
argmax
<EOS>
Decoder

NMT: how does it work?

- NMT directly calculates P(y|x)
  - y – target sentence, x – source sentence

$$P(y|x) = P(y_2|y_1, x)P(y_3|y_1, y_2, x)\ldots \underbrace{P(y_T|y_1, y_2, \ldots, x)}$$

Probability of next word
in target language

- To train it we need a huge parallel corpus.

Seq2seq is trained end-to-end

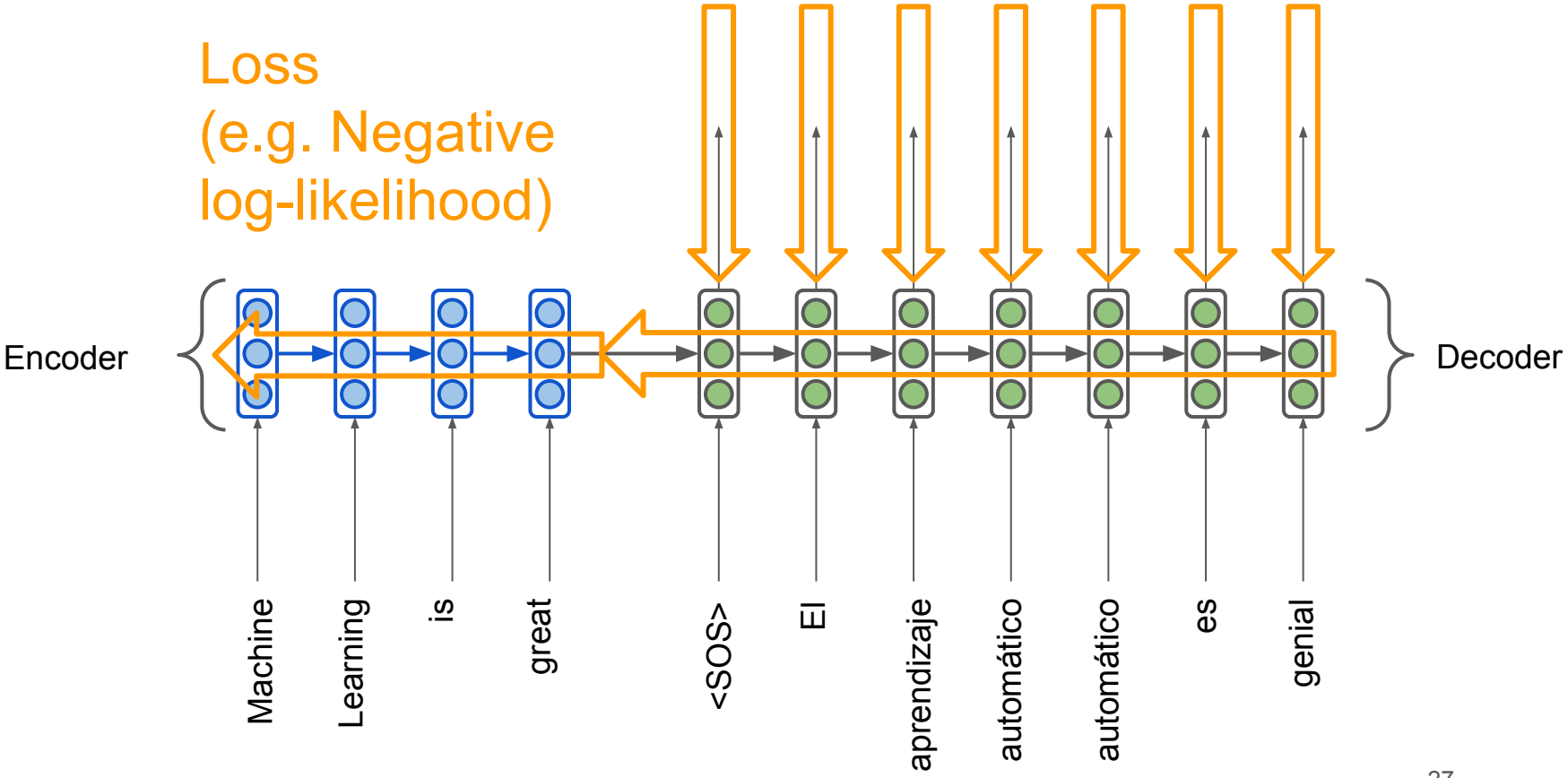

Greedy decoding

- Decoder predicts the most probable token (argmax) on each step
- The approach is **greedy**

Any problems with it?

Any mistake is treated as input on the next step!

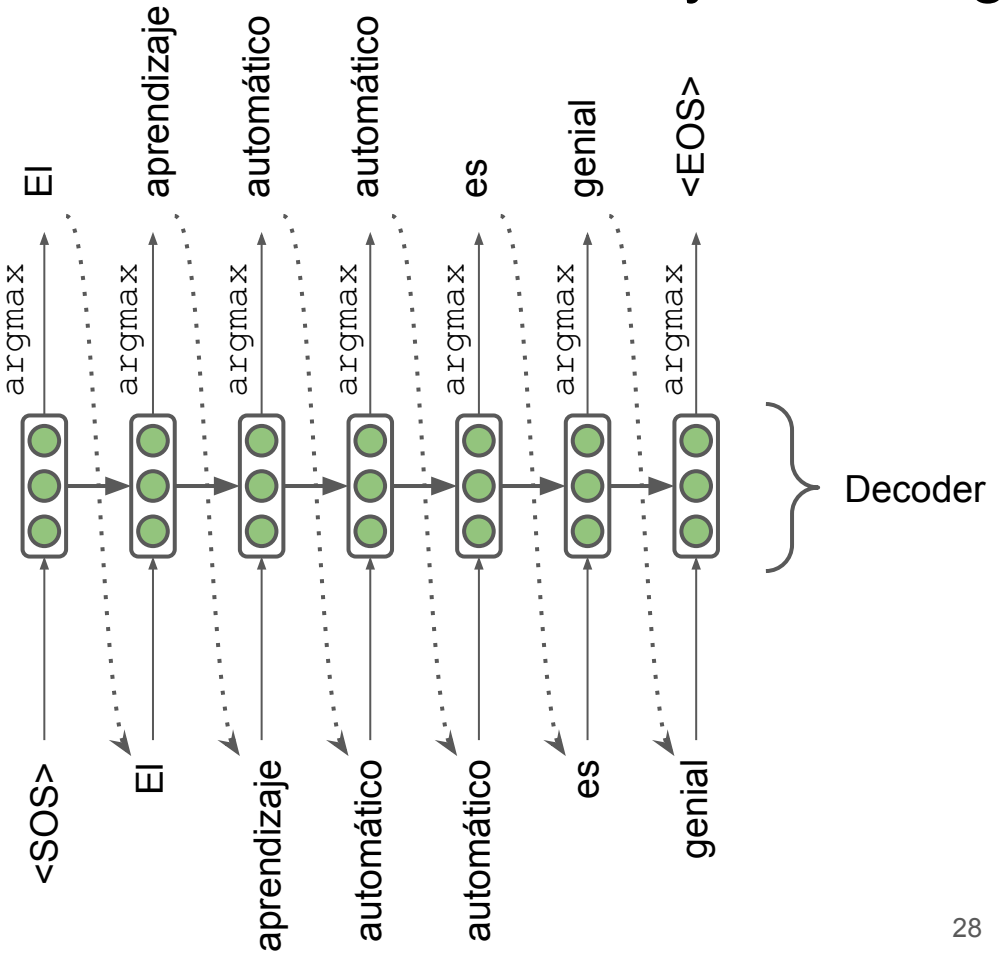

Exhaustive search

- We want the translation that maximizes the likelihood:

$$P(y|x) = P(y_1|x) \prod_{t=2}^{T} P(y_t|y_1, \ldots\ y_{t-1}, x)$$

- We cannot compute all the possible sequences (exponential complexity)

Beam search

- On each step of decoder, keep track of the k most probable partial translations (which we call hypotheses)
- k is the beam size (in practice around 5 to 10)
- A hypothesis has a score which is its log probability:

$$\text{score}(y_1, \ldots, y_t) = \log P_{\text{LM}}(y_1, \ldots, y_t | x) = \sum_{i=1}^{t} \log P_{\text{LM}}(y_i | y_1, \ldots, y_{i-1}, x)$$

- We search for high-scoring hypotheses, tracking top k on each step
- Beam search does not guarantee finding optimal solution

Beam search decoding: example

Beam size = k = 2. Blue numbers = $\text{score}(y_1, \ldots, y_t) = \sum_{i=1}^{t} \log P_{\text{LM}}(y_i | y_1, \ldots, y_{i-1}, x)$

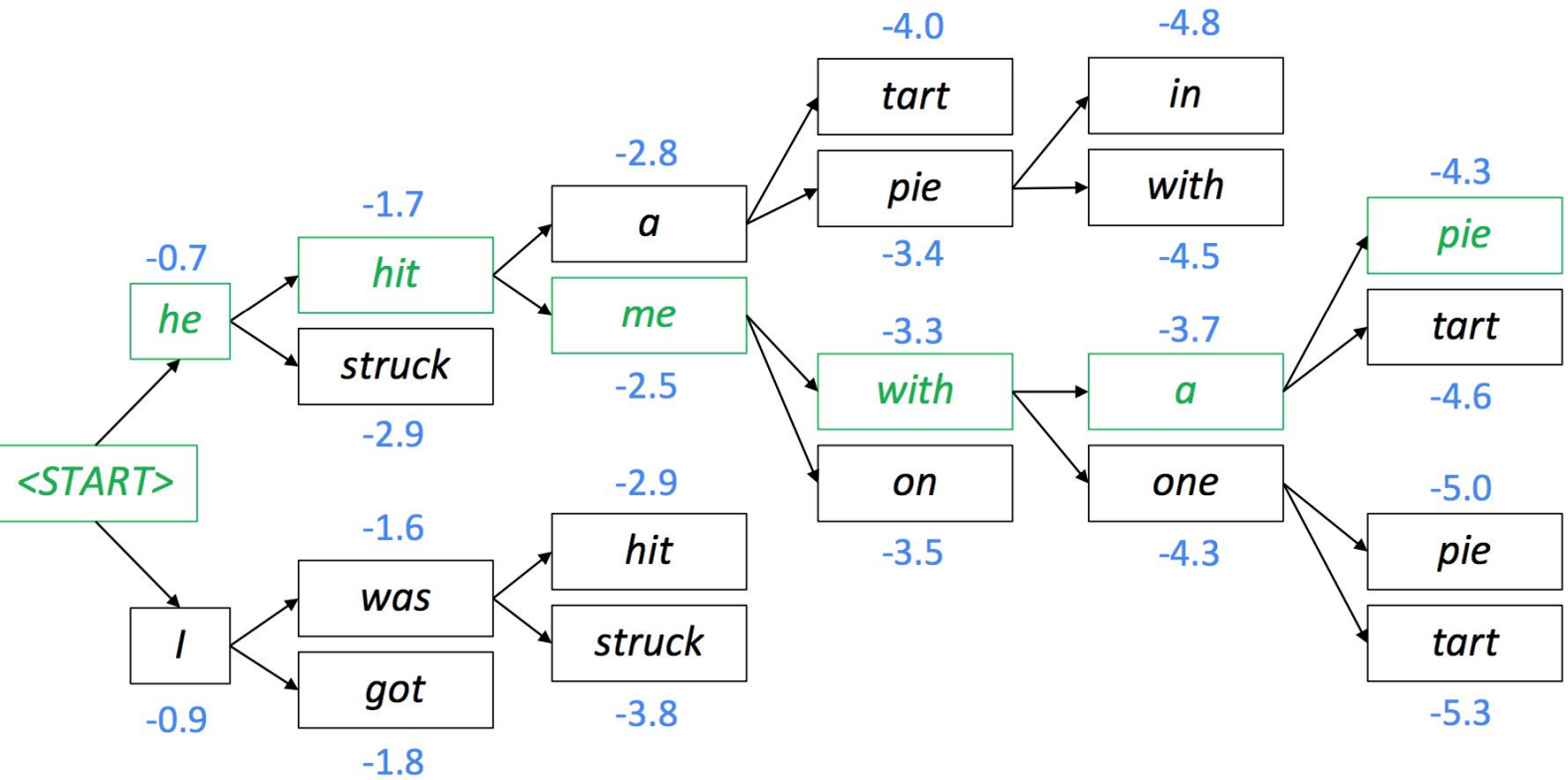

Source: http://web.stanford.edu/class/cs224n/slides/cs224n-2019-lecture08-nmt.pdf

Beam search decoding: stopping criterion

- In **greedy decoding**, usually we decode until the model produces <EOS> token
- In **beam search decoding**, different hypotheses may produce <EOS> tokens on different timesteps
  - When a hypothesis produces <EOS>, that hypothesis is complete.
  - Place it aside and continue exploring other hypotheses via beam search.
- Usually we continue beam search until:
  - We reach pre-defined timestep T
  - We have at least n completed hypotheses

Beam search decoding: finishing up

- How to select top one with highest score?
- Each hypothesis on our list has a score:

$$\text{score}(y_1, \ldots, y_t) = \log P_{\text{LM}}(y_1, \ldots, y_t | x) = \sum_{i=1}^{t} \log P_{\text{LM}}(y_i | y_1, \ldots, y_{i-1}, x)$$

- **Problems?**

  Longer hypotheses have lower scores

- **Fix:** Normalize by length. Use this to select top one instead:

$$\frac{1}{t} \sum_{i=1}^{t} \log P_{\text{LM}}(y_i | y_1, \ldots, y_{i-1}, x)$$

NMT: Quality Evaluation

BLEU

BLEU (Bilingual Evaluation Understudy) compares the machine-written translation to human-written translation, and computes a similarity score based on:

- n-gram precision
- penalty for too-short system translations (brevity penalty)

$$BLEU = \text{brevity penalty} \cdot \left(\prod_{i=1}^{n} \text{precision}_i \right)^{1/n} \cdot 100\%$$

$$\text{brevity penalty} = min \left(1, \frac{\text{output length}}{\text{reference length}} \right)$$

BLEU

BLEU (Bilingual Evaluation Understudy) compares the machine-written translation to human-written translation, and computes a similarity score based on:

- n-gram precision
- brevity penalty

SYSTEM A: Israeli officials (2-GRAM MATCH) responsibility of airport (1-GRAM MATCH) safety

REFERENCE: Israeli officials are responsible for airport security

SYSTEM B: airport security (2-GRAM MATCH) Israeli officials are responsible (4-GRAM MATCH)

Metric	System A	System B
precision (1gram)	3/6	6/6
precision (2gram)	1/5	4/5
precision (3gram)	0/4	2/4
precision (4gram)	0/3	1/3
brevity penalty	6/7	6/7
BLEU	0%	52%

$$BLEU = \text{brevity penalty} \cdot \left(\prod_{i=1}^{n} \text{precision}_i \right)^{1/n} \cdot 100\%$$

BLEU is imperfect:

- There are many valid ways to translate a sentence
- So a good translation may get a poor BLEU score just because of low n-gram overlap with the human translation

Quality metrics for MT

- **ROUGE** (Recall-Oriented Understudy for Gisting Evaluation)
- **METEOR** (Metric for Evaluation of Translation with Explicit ORdering)
  - Uses synonyms from WordNet

Quality metrics for MT

- **<u>Human evaluation</u>**

Side-by-side (SbS HE)

Q: Pick the best translaiton

Src: Beam search decoding
System1: декодирование с поиском лучадекодирование поиска луча
System2: декодирование поиска луча

Direct Assessment (DA)

Q: Rate this translation of 5-point scale
Src: Beam search decoding
Translation: декодирование поиска луча

Quality metrics for MT

Human eval is expensive

Solution: ML models trained to approximate HE

1. BLEURT (Google) - BERT finetuned on DA ratings
2. XCOMET (Unbabel) - XLM finetuned on DA + MQM ratings
3. LLM-based estimators - prompt LLM to estimate MT quality

NMT: advantages

- Better performance
  - More fluent
  - Better use of context
  - Better use of phrase similarities
- A single neural network to be optimized end-to-end
  - No subcomponents to be individually optimized
- Requires much less human engineering effort
  - No feature engineering
  - Same method for all language pairs

NMT: disadvantages

- NMT is less interpretable
  - Hard to debug

- NMT is difficult to control
  - For example, can’t easily specify rules or guidelines for translation
  - Safety concerns!

NMT: disadvantages

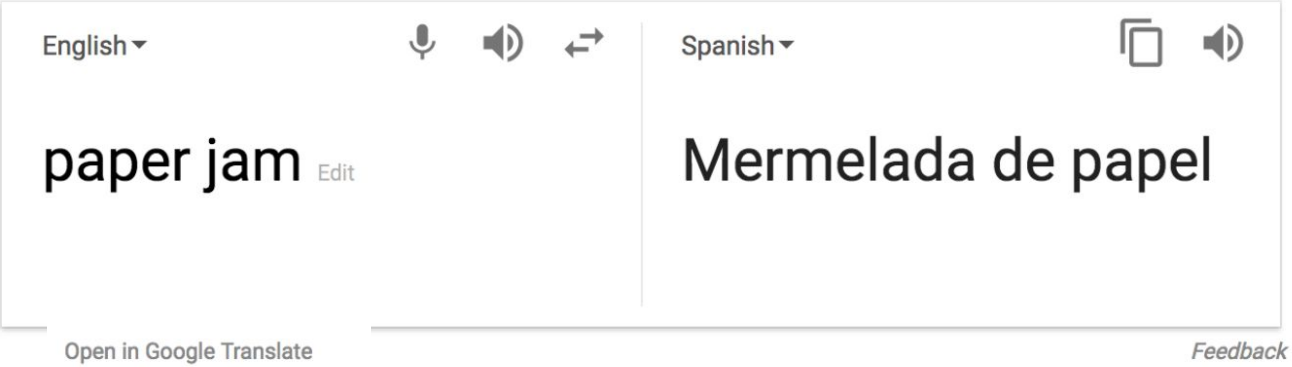

?

NMT: disadvantages

Somali

Translate from Irish

ag ag ag ag ag ag ag ag ag ag ag ag
ag ag ag ag ag ag ag ag ag ag ag ag
ag Edit

English

As the name of the LORD was written in the Hebrew language, it was written in the language of the Hebrew Nation

Feedback

NMT: disadvantages

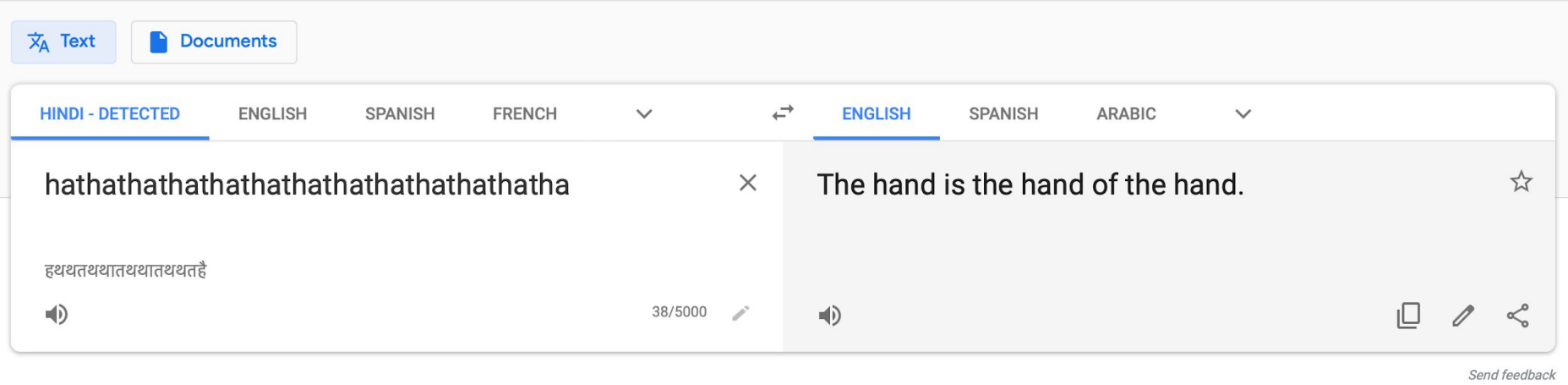

Is Machine Translation solved?

- Challenges yet to be resolved
  - Use of large context in translation
  - Low-resource language pairs (no big parallel corpora)
  - Slang and narrow domains
  - Robustness to errors and typos

Attention

Seq2seq NMT

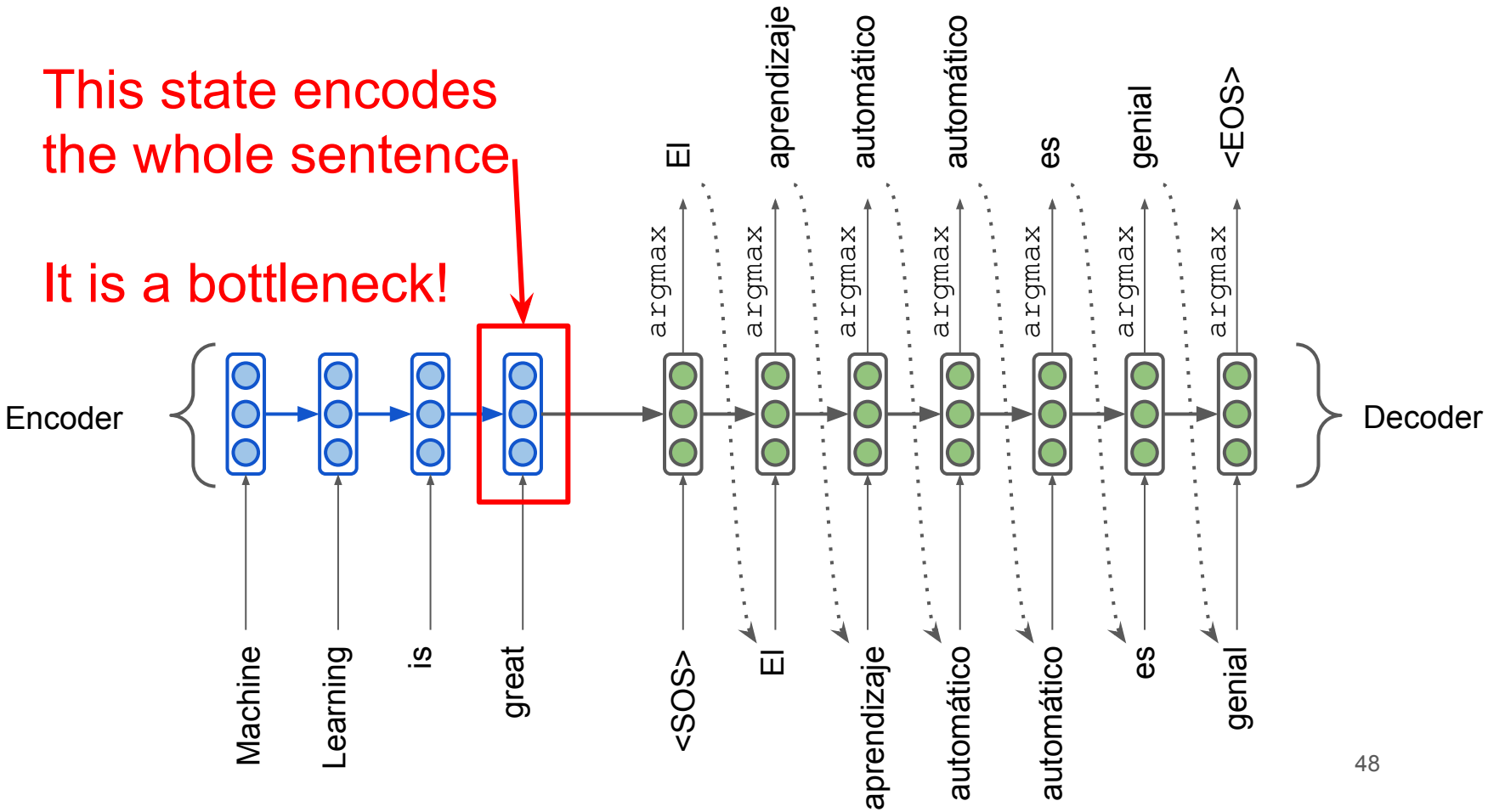
This state encodes the whole sentence
It is a bottleneck!
Encoder
Decoder
Machine
Learning
is
great
<SOS>
El
aprendizaje
automático
automático
es
genial
argmax
argmax
argmax
argmax
argmax
argmax
argmax
El
aprendizaje
automático
automático
es
genial
<EOS>

<u>Main idea:</u>

on each step of the **decoder**, use **direct connection to the encoder** to focus on a particular part of the source sequence

Seq2seq with attention

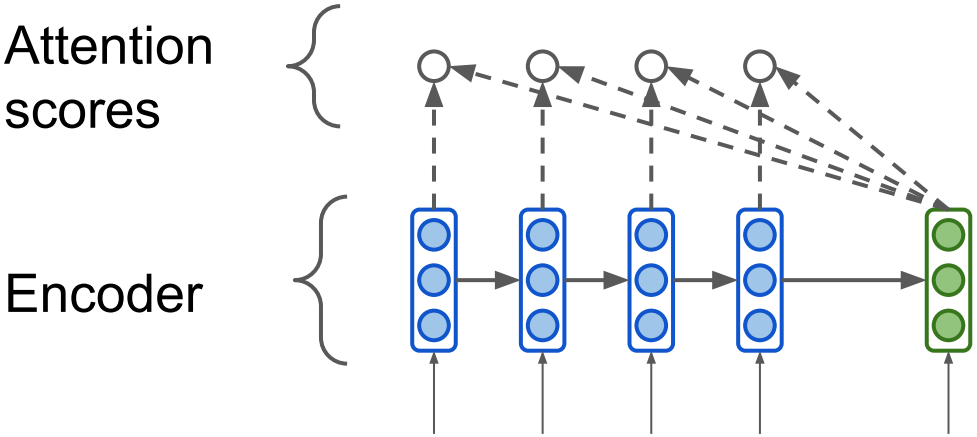

Seq2seq with attention

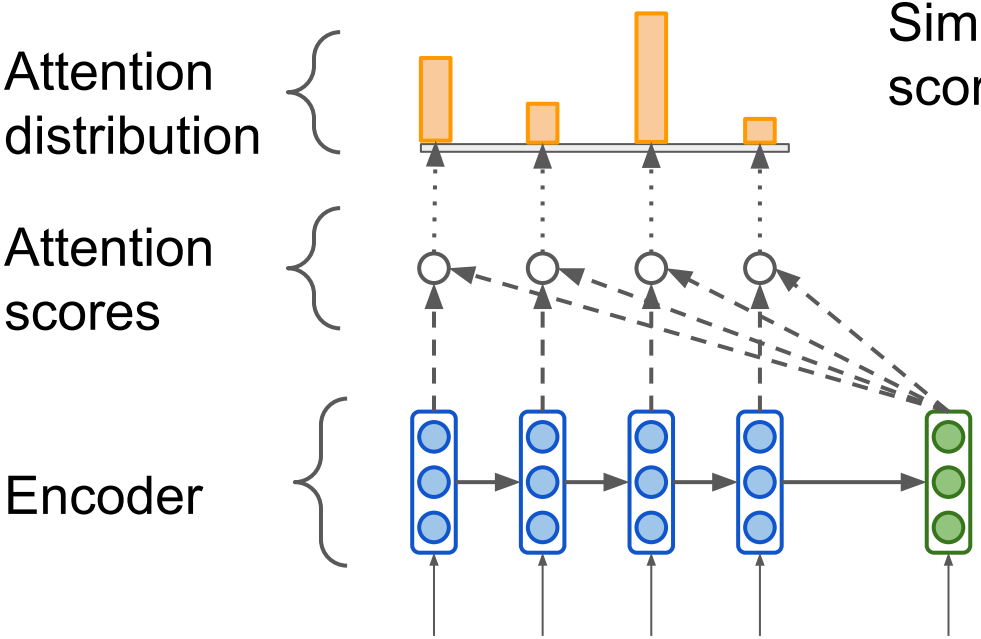

Simply apply softmax to scores

Seq2seq with attention

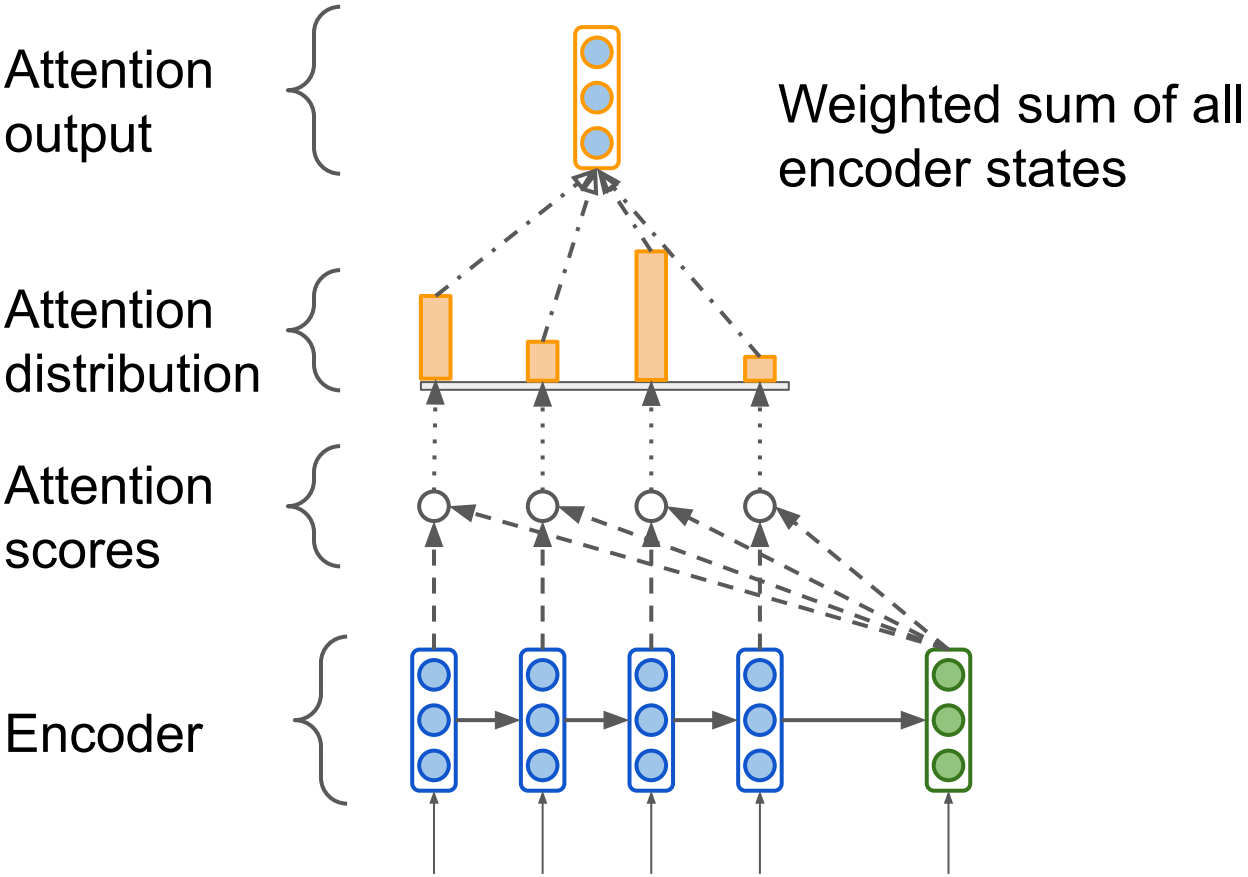

Seq2seq with attention

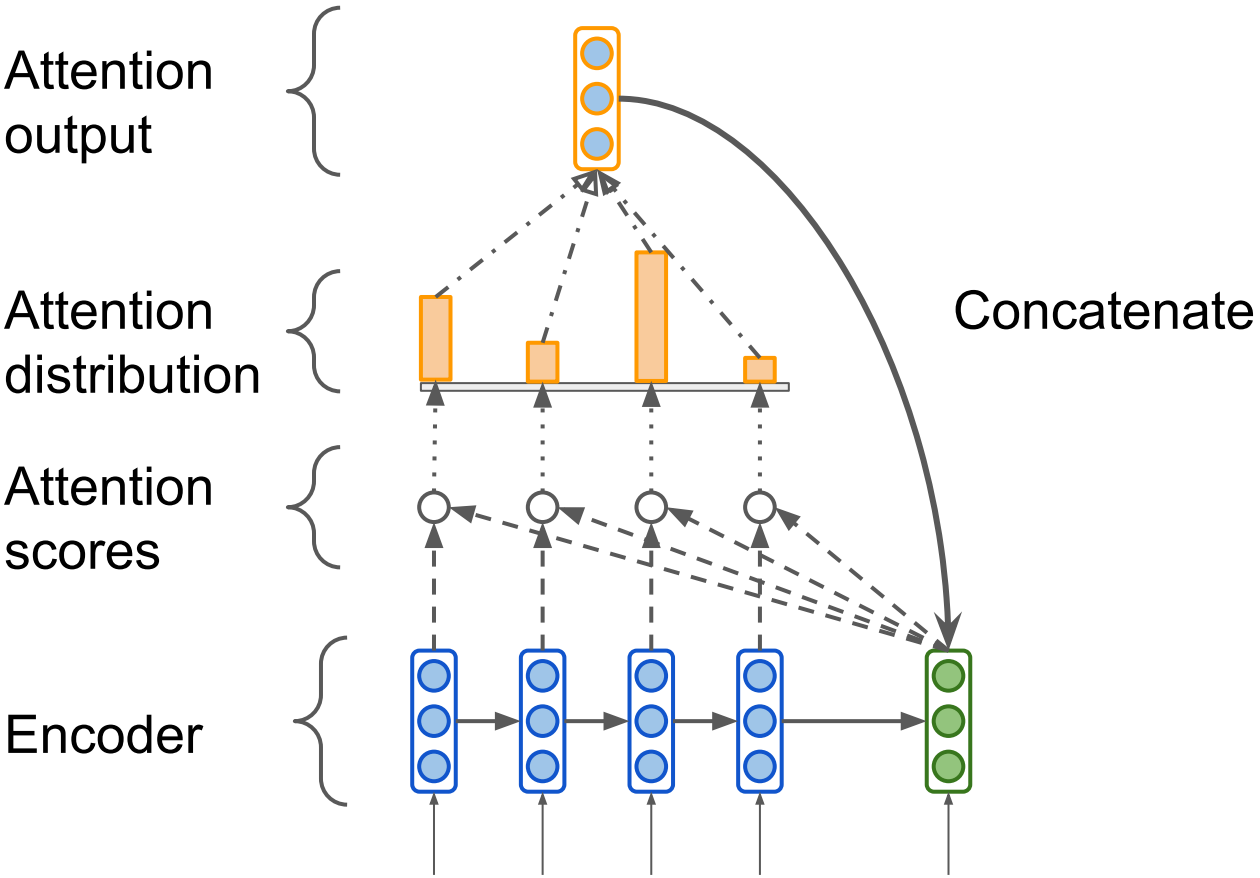

Seq2seq with attention

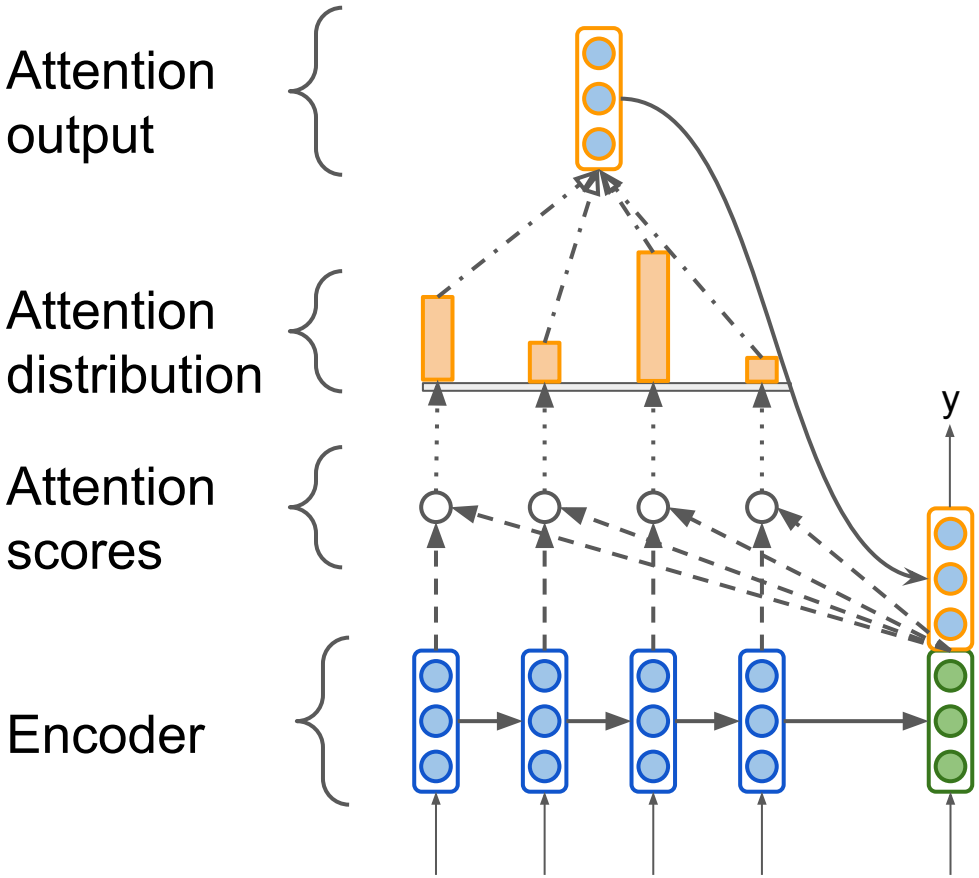

Seq2seq with attention

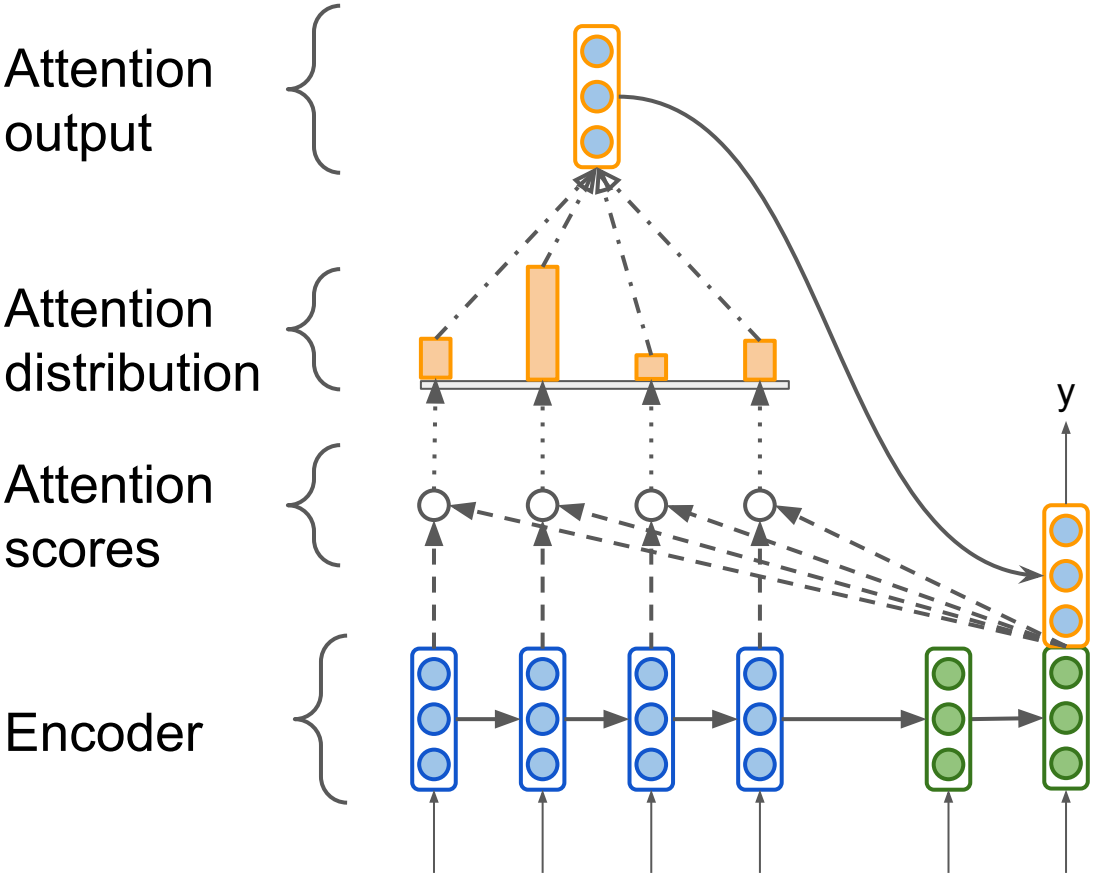

Seq2seq with attention

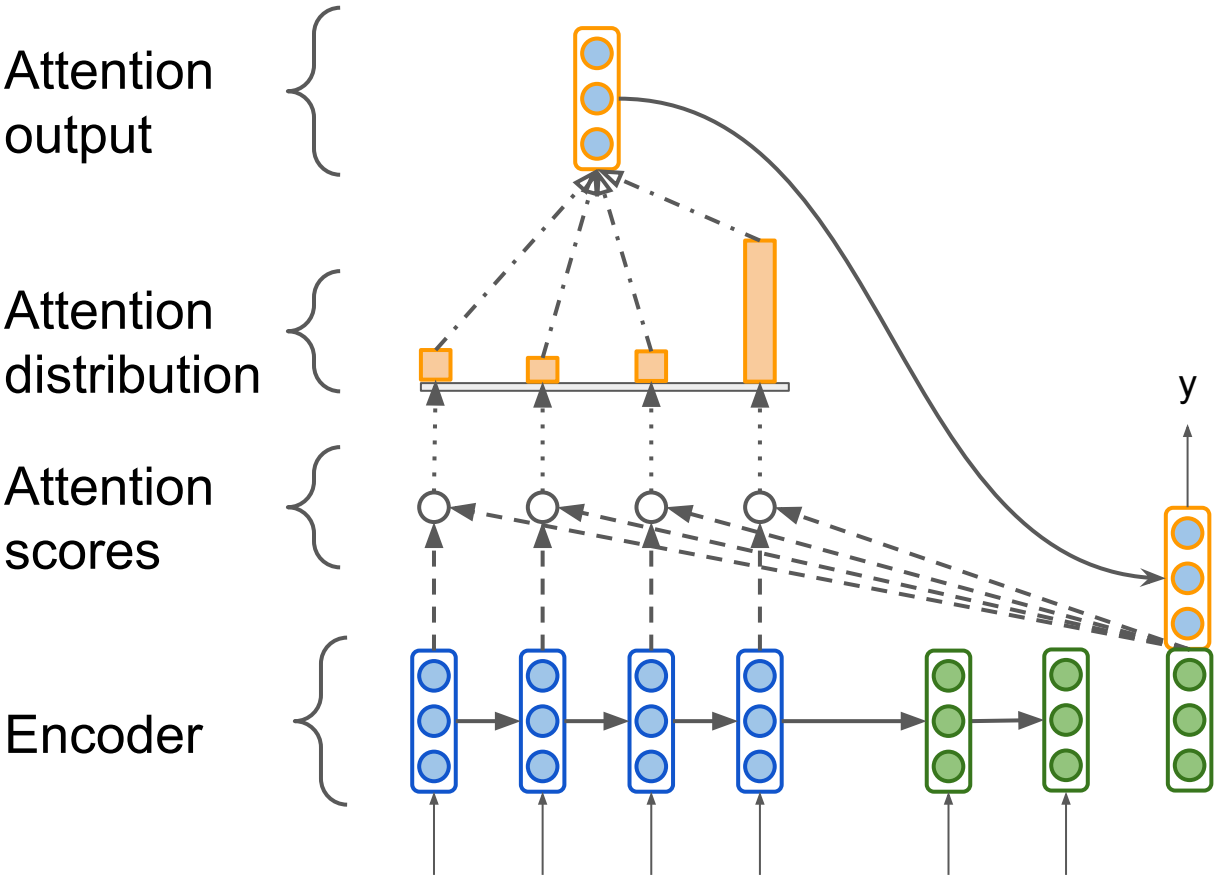

Attention in equations

Denote encoder hidden states $\mathbf{h}_1, \ldots, \mathbf{h}_N \in \mathbb{R}^k$

and decoder hidden state at time step t $\mathbf{s}_t \in \mathbb{R}^k$

The attention scores $\mathbf{e}^t$ can be computed as dot product

$$\mathbf{e}^t = [\mathbf{s}^T \mathbf{h}_1, \ldots, \mathbf{s}^T \mathbf{h}_N]$$

Then the attention vector is a linear combination of encoder states

$$\mathbf{a}_t = \sum_{i=1}^{N} \boldsymbol{\alpha}_i^t \mathbf{h}_i \in \mathbb{R}^k$$, where $$\boldsymbol{\alpha}_t = \mathrm{softmax}(\mathbf{e}_t)$$

Attention provides interpretability

- We may see what the decoder was focusing on
- We get word alignment for free!

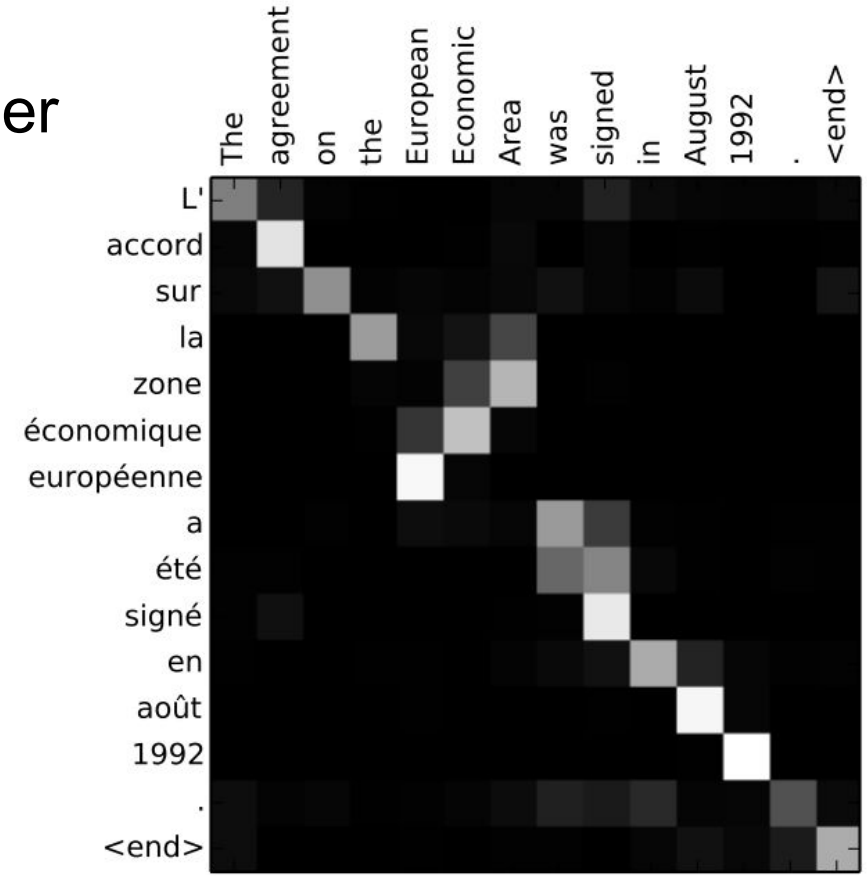

Bahdanau et al. "Neural Machine Translation by Jointly Learning to Align and Translate", 2014

Attention variants

- Basic dot-product (the one discussed before): $\boldsymbol{e}_i = \boldsymbol{s}^T \boldsymbol{h}_i \in \mathbb{R}$
- Multiplicative attention: $\boldsymbol{e}_i = \boldsymbol{s}^T \boldsymbol{W} \boldsymbol{h}_i \in \mathbb{R}$
  - $\boldsymbol{W} \in \mathbb{R}^{d_2 \times d_1}$ - weight matrix
- Additive attention: $\boldsymbol{e}_i = \boldsymbol{v}^T \tanh(\boldsymbol{W}_1 \boldsymbol{h}_i + \boldsymbol{W}_2 \boldsymbol{s}) \in \mathbb{R}$
  - $\boldsymbol{W}_1 \in \mathbb{R}^{d_3 \times d_1}, \boldsymbol{W}_2 \in \mathbb{R}^{d_3 \times d_2}$ - weight matrices
  - $\boldsymbol{v} \in \mathbb{R}^{d_3}$ - weight vector

Summary

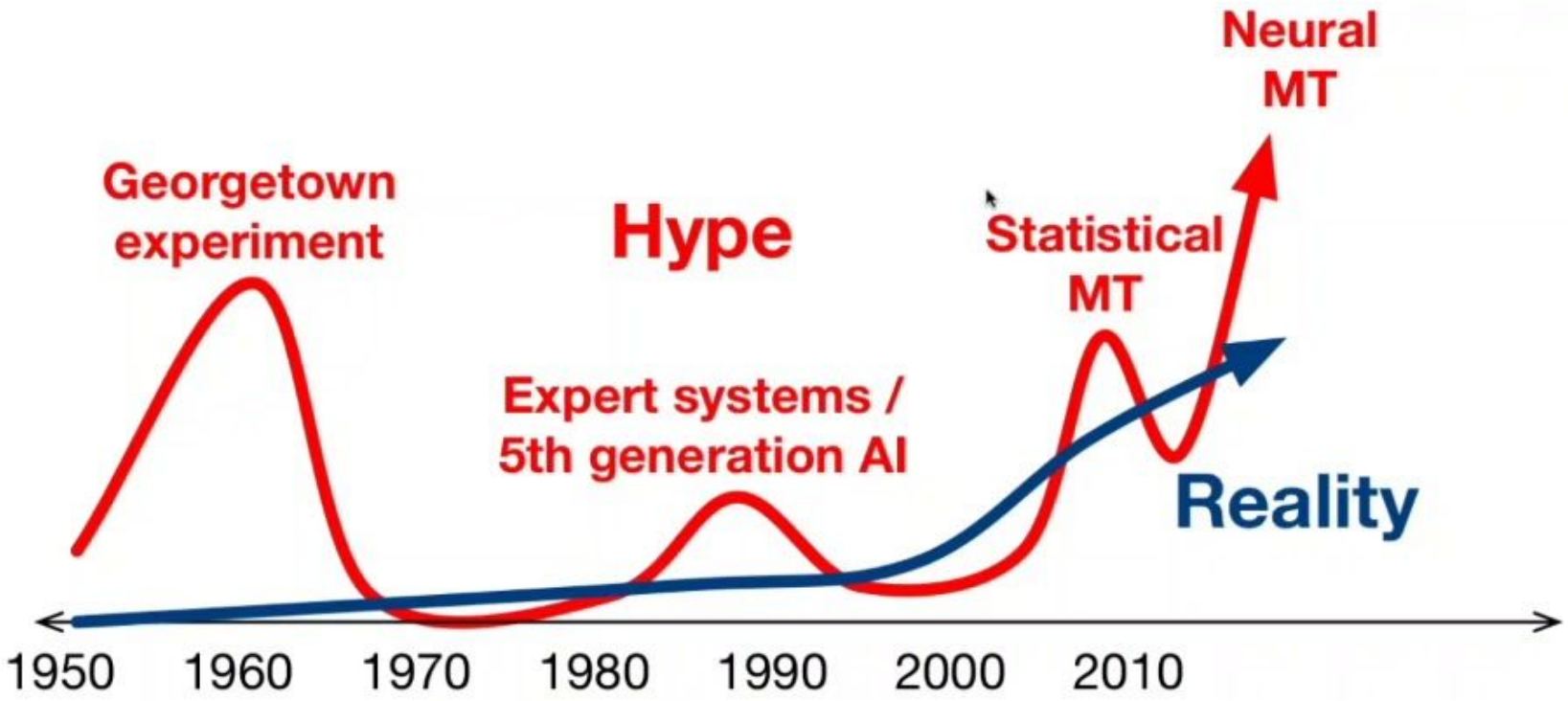
Neural
MT
Georgetown
experiment
Hype
Statistical
MT
Expert systems /
5th generation AI
Reality
1950
1960
1970
1980
1990
2000
2010