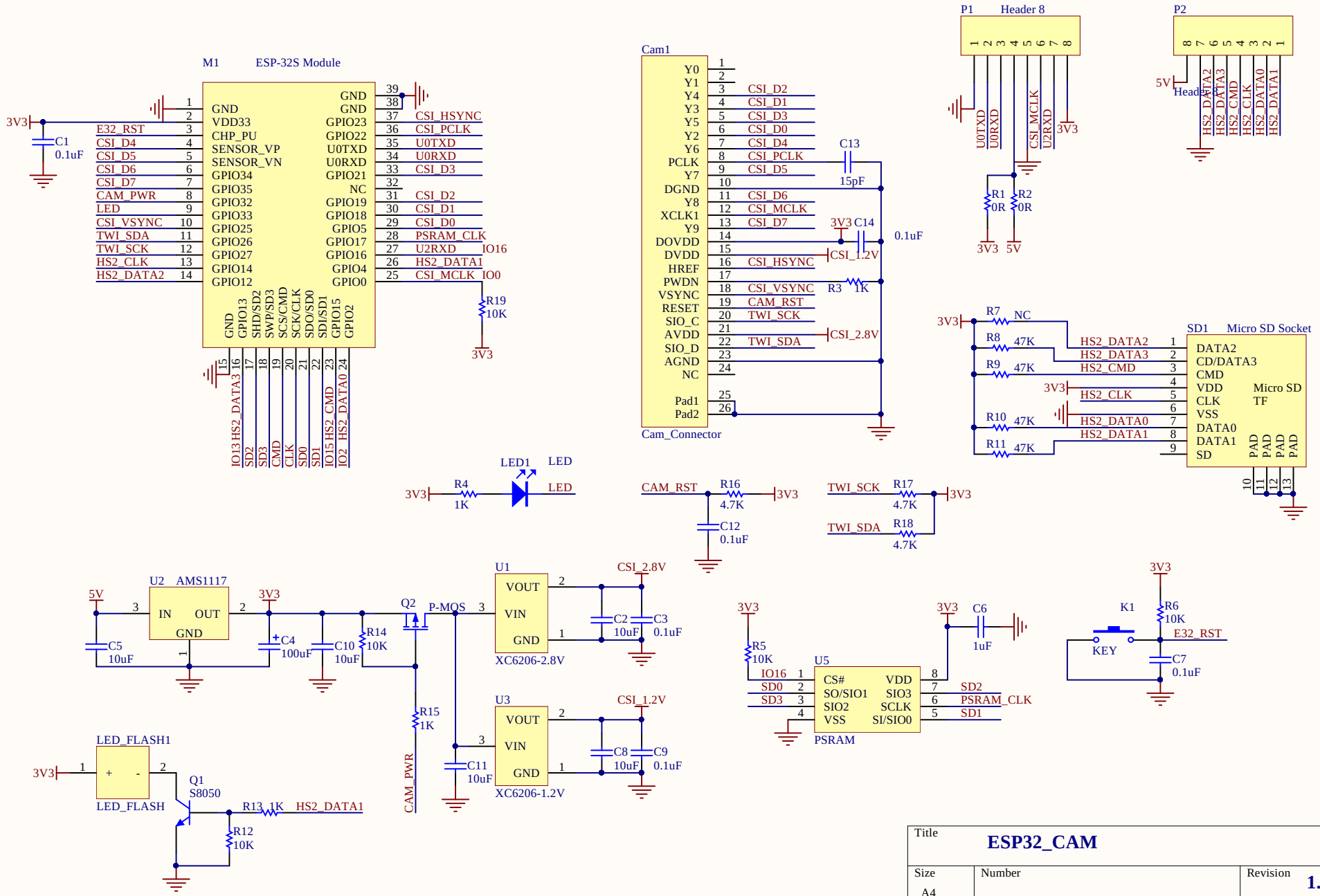

Title	**ESP32_CAM**		
Size A4	Number		Revision **1.6**
Date: 2018/1/30		Sheet of	
File: E:\project2018\..\ESP32_CAM_V1.6.Schdoc		Drawn By:	