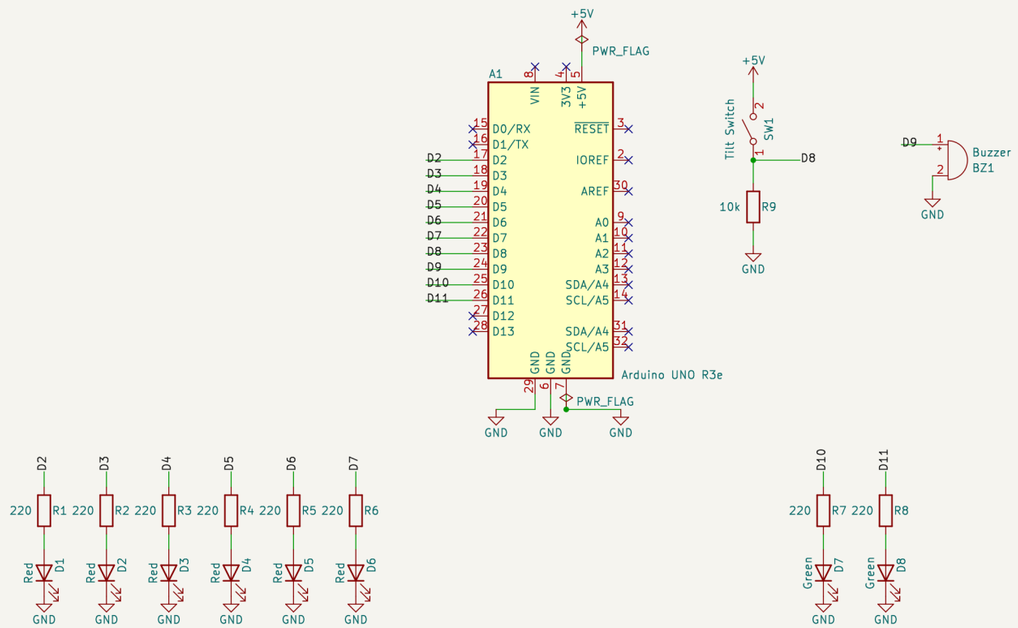

Sheet: /
File: digital_hourglass_with_Piezzo_and_tic_tac_leds.kicad_sch

Title: Arduino UNO R3e – Digital Hourglass with piezzo and tic–tac LEDs

Size: A3	Date:	Rev: 2.1
KiCad E.D.A. kicad 7.0.11+dfsg–1build4		Id: 1/1