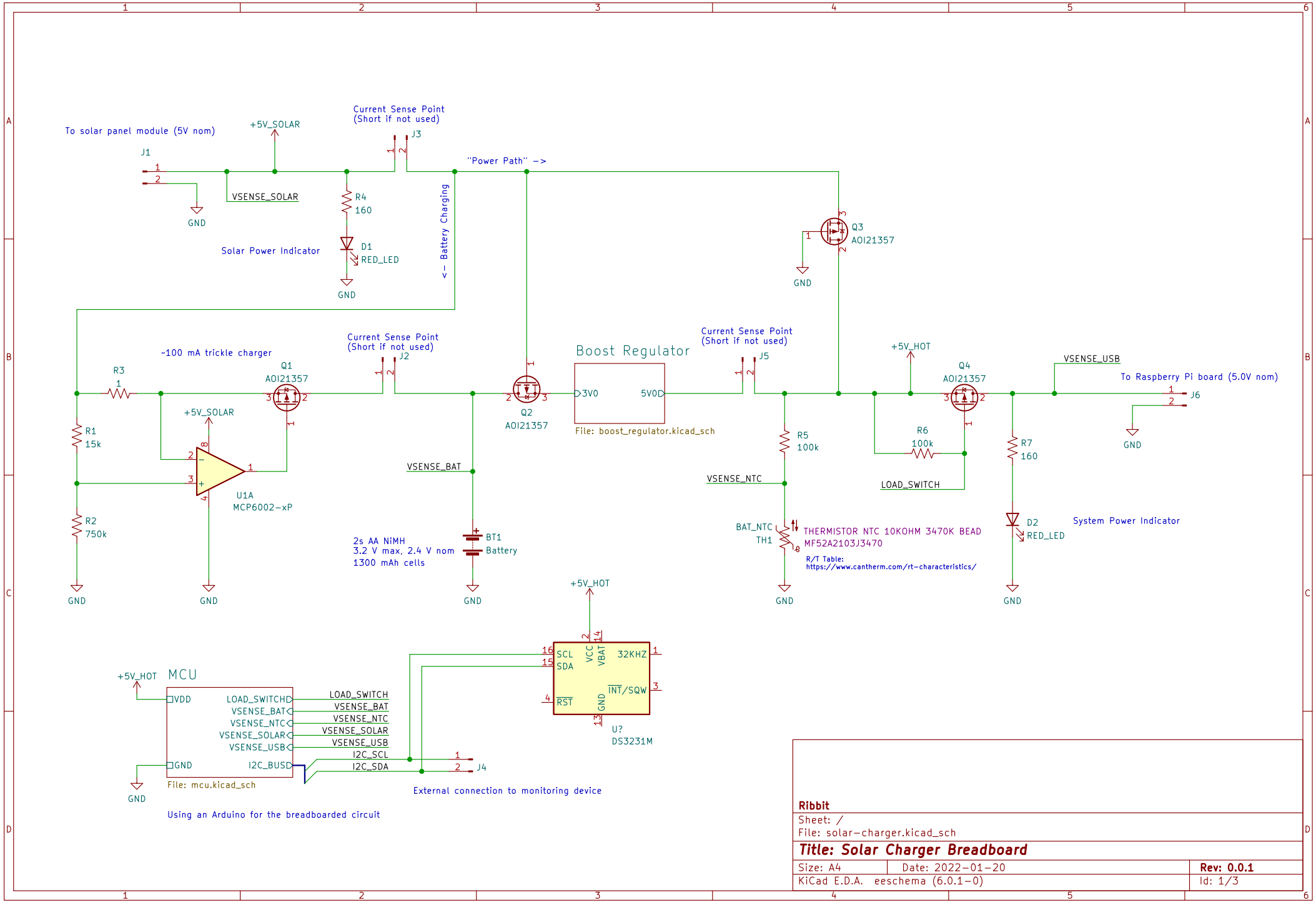

Ribbit

Sheet: /

File: solar-charger.kicad_sch

Title: Solar Charger Breadboard

Size: A4	Date: 2022-01-20	**Rev: 0.0.1**
KiCad E.D.A. eeschema (6.0.1-0)		Id: 1/3