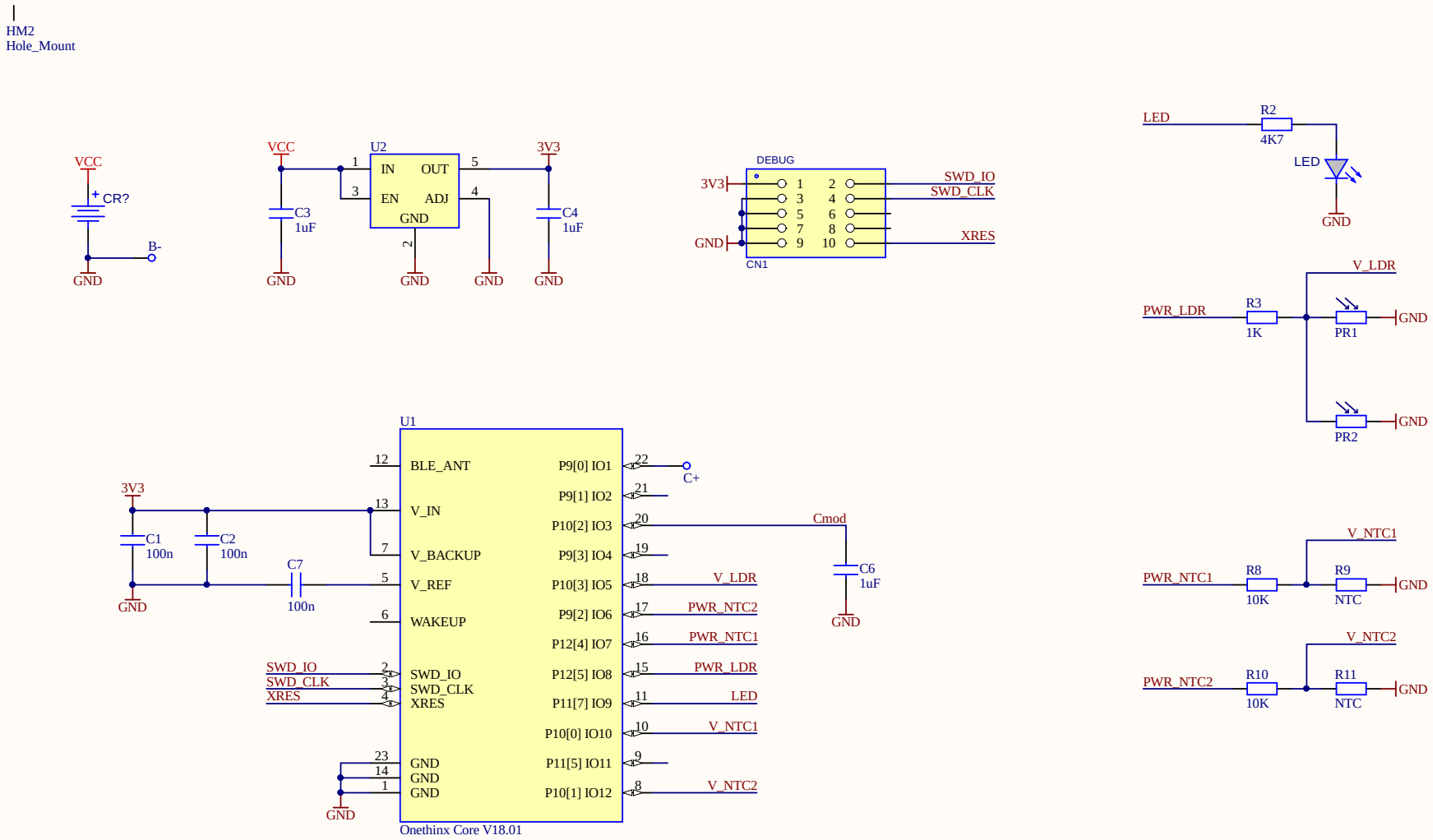

Onethinx

Gouverneurlaan 3
6002 EC Weert
The Netherlands

www.onethinx.com
info@onethinx.com
+31 (0) 88 100 4600

Title: Farmbug		
Size: A3	Number: 0112.01	Revision: *
Date: 27-05-2023	Sheet 1 of 1	
File: FarmBug.SchDoc	Drawn by: TB & RN	