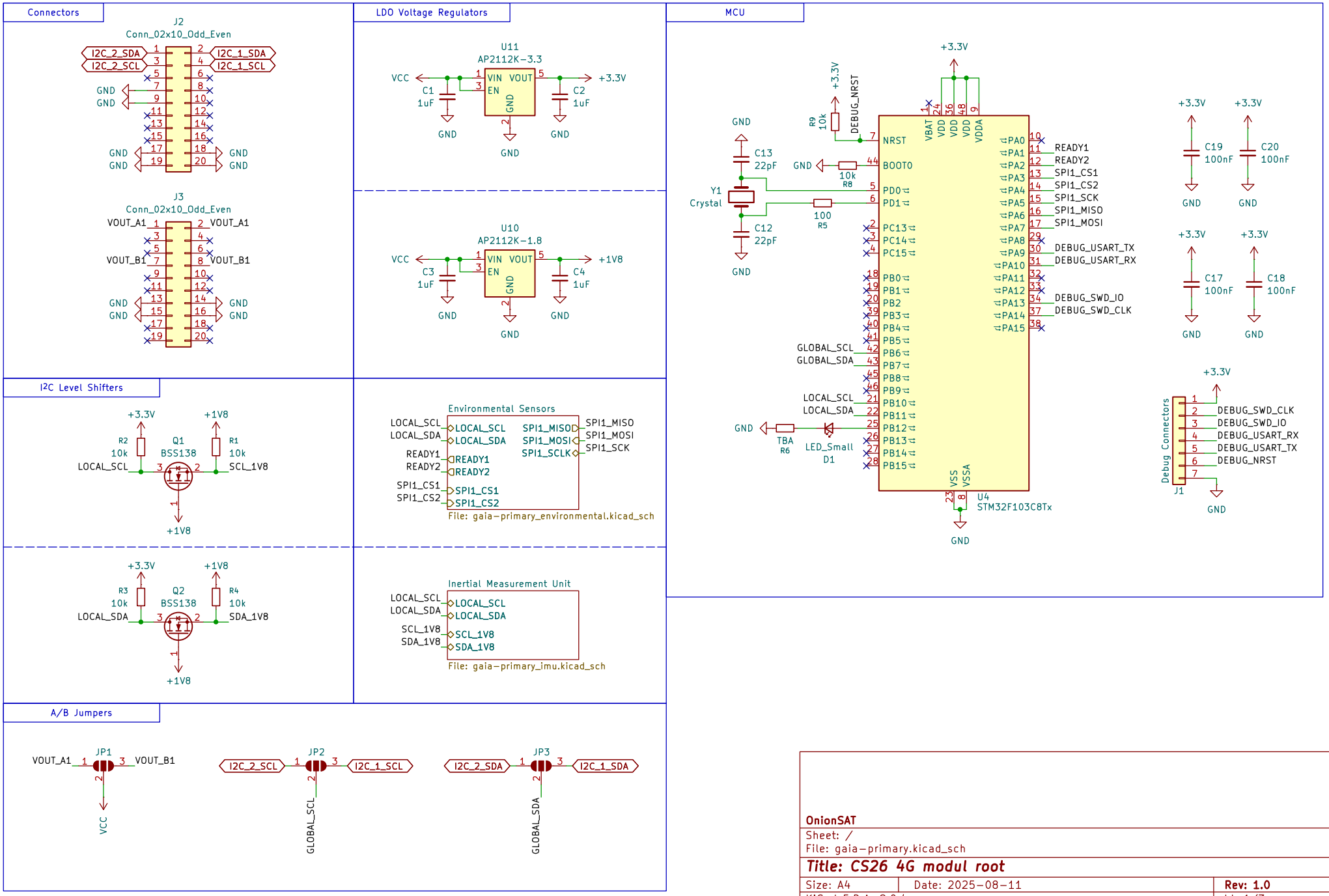

OnionSAT

Sheet: /

File: gaia-primary.kicad_sch

Title: CS26 4G modul root

Size: A4	Date: 2025-08-11	**Rev: 1.0**
KiCad E.D.A. 9.0.4		Id: 1/3

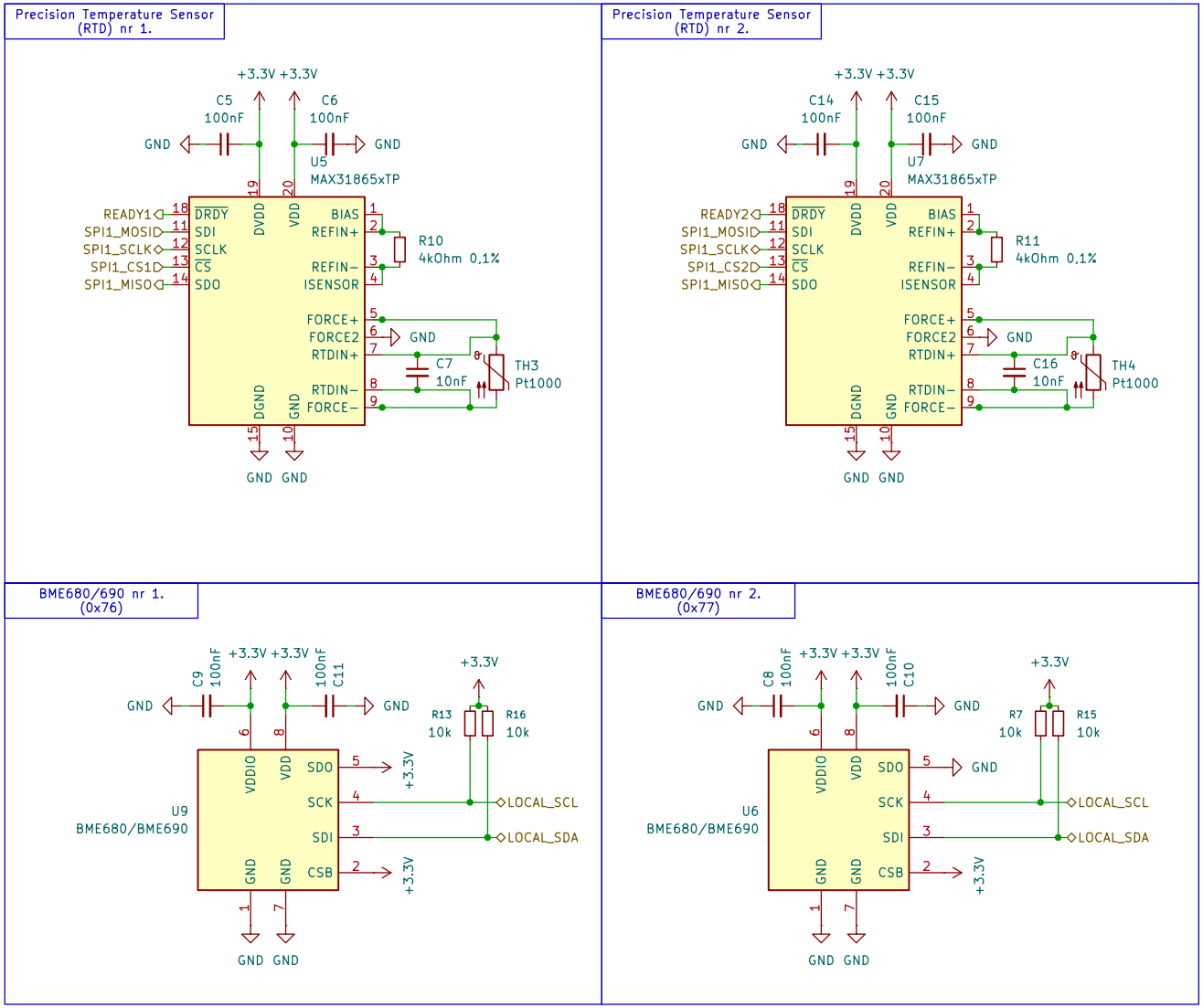

Sheet: /Environmental Sensors/
File: gaia−primary_environmental.kicad_sch

Title:

Size: A4	Date:	Rev:
KiCad E.D.A. 9.0.4		Id: 2/3

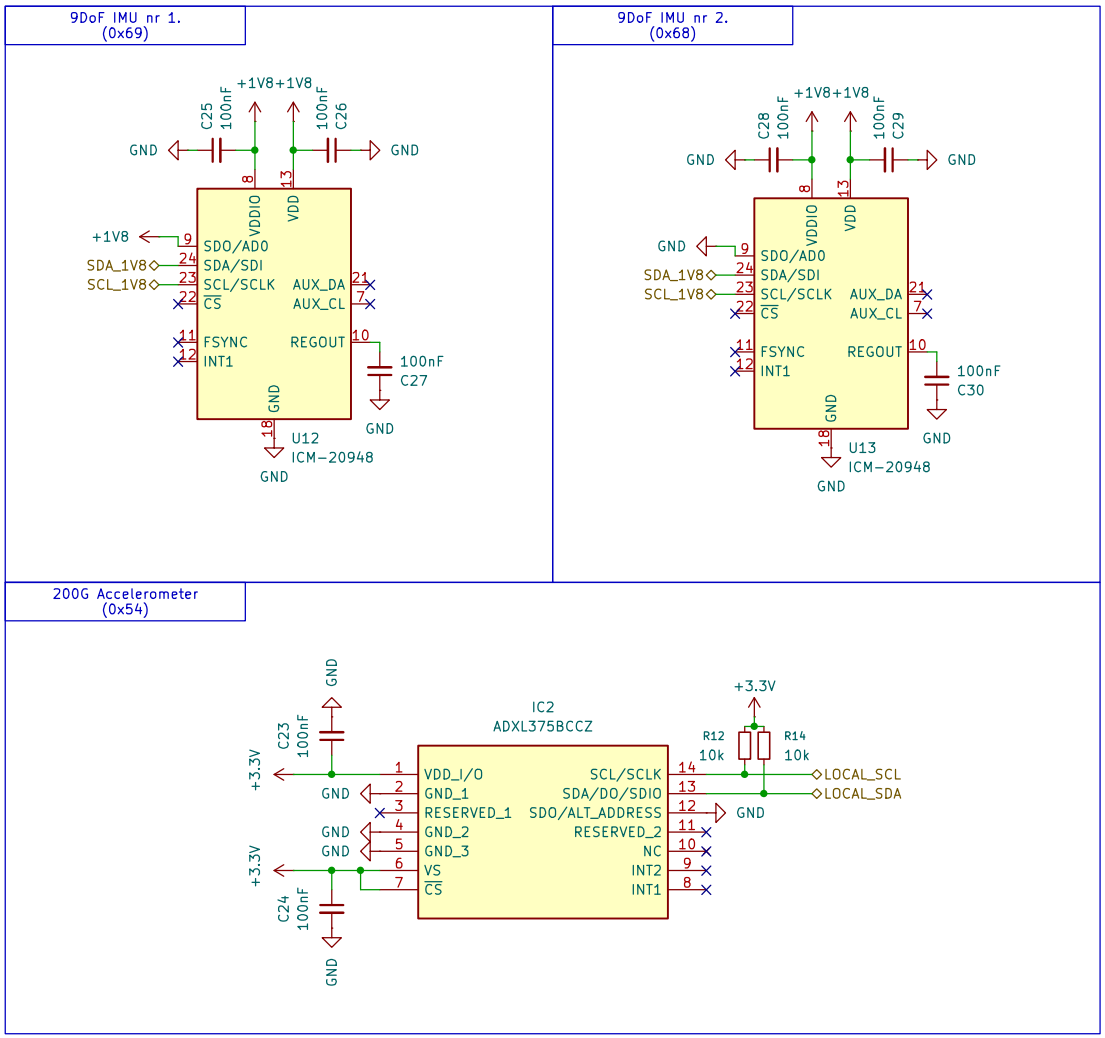

Sheet: /Inertial Measurement Unit/
File: gaia-primary_imu.kicad_sch

Title:

Size: A4	Date:	Rev:
KiCad E.D.A. 9.0.4		Id: 3/3