ALTHEN SENSORS & CONTROLS

bar

DSA5000
Ethernet Pressure Scanner

DSA5000 - Standard (right)
DSA5000 - "QD" w/shock (left)

FEATURES

- Engineering Unit Data Stream up to 5,000Hz (Samples/Channel/Second)
- ±0.04% Full Scale, Long Term Accuracy*
- 0 - 1,000psi Pressure Range
- Non-Multiplexed, Synchronous Scanning
- IEEE1588-2008v2 PTP Compliant
- "QD" (Quick Disconnect) Header Option
- 1Gb Ethernet Connection
- 24-bit A/D Converter Per Channel
- Multi-Drop Architecture for Multiple Module Simplicity

The DSA5000 pressure scanner is a versatile, all-inone data acquisition system. Each DSA5000 uses a pressure sensor per input channel architecture. All data acquisition, data conversion, and communications are handled by integrated processors and A/D converters. The DSA5000 utilizes an individual A/D converter and RTD for each sensor allowing fully synchronous and fast data collection. Together, these features provide easy setup, simple operation, and long term reliability.

The DSA5000 is designed to output an engineering unit data stream over an Ethernet connection. A broad selection of data output formats and options are available including; TCP/IP, UDP and FTP data transfer protocols, in ASCII and Binary formats. A Webserver is fully integrated providing an intuitive and easy means for configuration, operation, and data collection.

The DSA5000 was developed with a new and unique form of connectivity: the option to use a hardware multi-drop architecture around a proprietary industrial, or "realtime" Ethernet protocol. This feature allows for a single Ethernet connection to a "master" DSA5000 which can control and collect data from other 5000 series modules in the network. Module identification, configuration, and synchronization happens seamlessly, minimizing setup time and frustration.

In addition to the electronics, internal calibration valves are included to provide maximum functionality. The valves allow for several logic states including Measurement, Isolate, Calibrate, and Purge.
The result of the DSA5000's careful design is a complete package that makes multi-point pressure acquisition tasks simple and powerful

APPLICATIONS

The DSA5000 is a versatile scanner, designed for a wide range of applications. The rugged package, customizable pneumatic interface options, and configurablitiy make it an ideal fit in applications such as gas turbine testing, flight testing, industrial, wind engineering, and others. The userfriendly interface, simple operation, and low overhead requirements also make it ideal for educational facilities, small research and development projects, automotive testing, and other quick tests with low channel counts.

The DSA5000 supports an extremely wide range of pressure inputs from 4"H2O (0.18psi) to 1,000psi in several pneumatic configurations. This means a DSA5000 can be configured for low pressure aerodynamic tests, high pressure compressor tests, and everything in-between.

For harsh environments where the module may be subjected to moisture, all DSA5000 modules are IP67 rated. In cases where the module may experience shock or vibration, an optional bolt-on "shock mount kit" is available to provide continuous and reliable operation.
For applications that require an extended operating temperature

Version | 07.2021

DSA® is a registered trademark of Scanivalve Corp. *Some ranges, see page 3 for complete accuracy specifications

ISO 9001:2015 CERTIFIED

range, the DSA5000 can be configured with an optional internal heater kit. This allows for yearround operations in open test cells, flight tests, elevated temperatures for Freon testing, and any other environment where temperature extremes, rapid or otherwise, are expected.

The combination of the IP67 rated package, heater and shock-mount options makes the DSA5000 capable of reliably operating in most environments.

MECHANISMS CALIBRATION VALVE

The DSA5000 calibration valve is "Normally Px," where no control pressure defaults the valve to Measurement (Operate) mode. 90psi control pressure is required to change the DSA calibration valve into Purge, Calibrate, or Isolate mode. Each of these states can be established during a test with measurement pressure applied. This flexibility allows the DSA to be calibrated online with either a "quick-zero" or multi-point calibration. Three internal solenoids are used to configure the logic state of the valve, fed by a single control supply input. These solenoids can be configured through software commands or used during automated routines.

MECHANISMS SENSORS

The DSA5000 was designed with accuracy and longterm sensor stability as a hallmark feature. Each sensor has an integrated RTD used for thermal compensation. Increasing the resolution of the sensor's temperature while improving the temperature update rate allows the DSA5000 to perform extremely well over the entire compensated temperature range. Even in a thermally changing environment, the thermal compensation provides excellent stability and accuracy. The combination of high quality sensors, careful package design, excellent characterization, and improved thermal compensation provides unmatched, long-term stability. This stability allows for less frequent zero and span calibrations

MECHANISMS ELECTRONICS

The electronics used in the DSA5000 offer several key advantages:

- One 24-bit A/D per pressure sensor per channel architecture. This allows fully synchronous data collection with no concessions or complications due to internal module timing.
- One RTD per pressure sensor. Each RTD utilizes its own 24-bit A/D converter for faster update rates and temperature resolution.
- High-speed processors that allow for continuous engineering unit data output at up to 5,000 samples/channel/second.

MECHANISMS SYNCHRONOUS ETHERNET PROTOCOL (SSEP)

The DSA5000 introduces the industry's only integrated, multi-drop architecture, industrial network configuration for pressure scanning instrumentation. Multiple DSA5000s can be connected together through miniature Ethernet connectors. This create an isolated, mini-network where the "master" unit serves as a single point of communications for all scanners in the mini-network. Scanners are automatically identified, easily configured, and accurately synchronized. Data from all scanners are merged together to provide a single output data file with pressure and temperature values from all of the connected Scanivalve 5000 series scanners.

CONFIGURATIONS

DSA5000 modules can be configured to specifically fit each unique application. A wide variety of pneumatic configurations as well as interface options and environmental options are offered.

PNEUMATIC CONFIGURATIONS

Standard DSA5000 modules come with the reference side of all 16 transducers manifolded to a single reference port. If the DSA is ordered as a dual-range unit, a reference port is provide for each range. As an option, the DSA can be configured with individual reference ports for all 16 channels. When true differential measurements are required, an 8 channel "True Differential" configuration provides inputs and calibration valves on both sides of each individual transducer. Absolute configurations are also available.

PNEUMATIC INTERFACE OPTIONS

For convenience and flexibility, the DSA5000 offers a variety of interfacing options. All pneumatic inputs use a 5/16"x24 female thread matching the SAE J1926-1* standard. Scanivalve supports this with a range of stainless steel tubulations, compression fittings, and quick-connect fittings. The DSA5000 can also be ordered with an optional "QD" (Quick Disconnect) Px input header. This is a versatile option that expands on the DSA5000s flexibility.

*SAE J1926-1 is equivalent to ISO 11926-1 for 5/16"x24 o-ring sealing straight thread fittings.

Version | 07.2021

COMMUNICATIONS

Communications to the DSA5000 Ethernet connection supports an impressive array of protocols. The user can connect to the integrated webserver using any web browser. This graphical interface allows the user to change settings, scan data to the screen, or scan data to a file on the host computer with the click of a mouse. The DSA can also stream data via TCP, UDP and FTP protocols. ASCII commands may be issued via a Telnet client connected to the DSA's Telnet server. The DSA is optimized to support a LabVIEW® interface. Example DSA LabVIEW® VIs are available.
The DSA5000 uses the latest Precision Time Protocol (IEEE-1588v2) standard to time correlate data. This protocol allows any 1588 slave device to synchronize its internal time to sub-microsecond accuracies without the use of an external hardware trigger.

LabVIEW® is a registered trademark of National Instruments

SPECIFICATIONS

Inputs (Px):

Female Threads:	5/16x24 (SAE J1926-1)
Tubulations:	0.040" (1.0mm), .063" (1.6mm) or 0.125" (3.2mm)
Compression:	1/16" and 1/8"
Quick-Connect:	1/16" Scanivalve QC

Full Scale Ranges:

Differential:	±4 inch H_2O,10 inch H_2O, 1, 2.5, 5, 15, 30, 50,100, 250, 500, 600, 750, 1000psid (±1.25, 2.5, 7, 17, 35,100, 205, 345, 690, 1724, 3450, 4125, 5175, 6895kPa)
Absolute:	15, 30, 50, 100 and 300 psia

Accuracy*:

PRESSURE RANGE	STATIC ACCURACY (%F.S.)
±4 inch H_2O	±.10%
±10 inch H_2O	±.08%
±1 to 500psid	±.04%
501 to 1000psid	±.05%
15 psia to 300 psia	TBD

(Including linearity, hysteresis, and repeatability)

Resolution:	24 bit
Max Scan Rate:	5,000 Hz/Channel EU
Communication:	Ethernet 1000baseT
Communication Protocol:	TCP/IP, UDP, FTP, HTTP, IEEE1588-2008v2 PTP
External Trigger:	6.5 mA at 4.5 Vdc minimum
Weight (no fittings):	DSA Base: 5.45 lbs. (2.47kg) QD Header: 0.40 lbs. (181g) Shock Mount Kit: 0.56 lbs. (255g)
Operating Temperature:	DSA5000: 0°C to 70°C With heater: -50°C to 70°C
Temperature Compensated Range:	0°C to 72°C Standard
Total Thermal Error over 0 - 72°C Range:	±.001% F.S. per °C
Mating Connector Type:	Ethernet: X-Code, 8-pin, M12 Power: A-Code , 8-pin, M12 SSEP Enet: A-Code, 4-pin, M8
Power Requirements:	9-36Vdc DSA5000 w/o Heater: 7W DSA5000 w/ Heater: 65W
Proof Pressure:	4 inch H_2O= 2 psi 10 inch H_2O = 2 psi 1 psid = 5 psi 2.5 to 499 psid = 2.0x 500 to 1000 psid = 1250psi
Burst Pressure:	4 inch H_2O= 2 psi 10 inch H_2O = 2 psi 1 psid = 5 psi 2.5 to 499 psid = 3.0x 500 to 1000 psid = 1500psi
Max Reference Pressure:	250 psig (1724 kPa)**
Media Compatibility:	Gases compatible with silicon, silicone, aluminum, and Buna-N

ORDERING INFORMATION

There are over 500 different DSA configurations available. These configurations include:

- High (>500PSI) or low (<500PSI) pressure builds
- Valve configurations
  - Standard (16Px)
  - Dual Range (16DR)
  - True Differential (8DPx)
  - Individual Reference (16IR)
  - Dual Range, True Differential (8DDR)
  - Absolute (16APx)
  - Dual Range Abolute (16ADR)
- Fitting Kits
  - 040, 063, or 125 tubulations
  - 1/16" or 1/8" compression
  - 063 Quick-Connects
  - None (5/16x24 Female threads)
- Quick Disconnect (QD) Header
- Optional Heater
- Optional Shock Mount Kit

To find the part number that matches the configuration needed, please visit www.scanivalve.com/dsa5000 and use the DSA5000 part number generator form.

*Consult factory for custom ranges. Some configurations may dictate a reduction in accuracy
** Elevated reference pressure measurements require special techniques and considerations. Consult factory for guidance.

Version | 07.2021

DIMENSIONS / INCHES [mm]

STANDARD CONFIGURATION

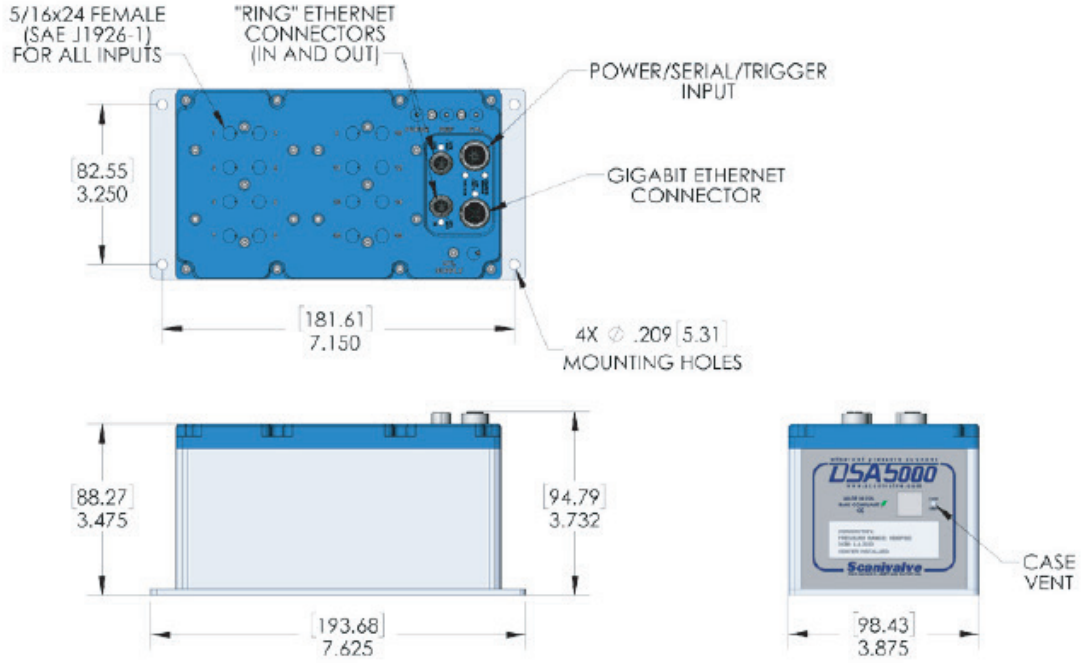

CONFIGURED WITH OPTIONAL QUICK-DISCONNECT (QD) HEADER AND SHOCK MOUNT KIT

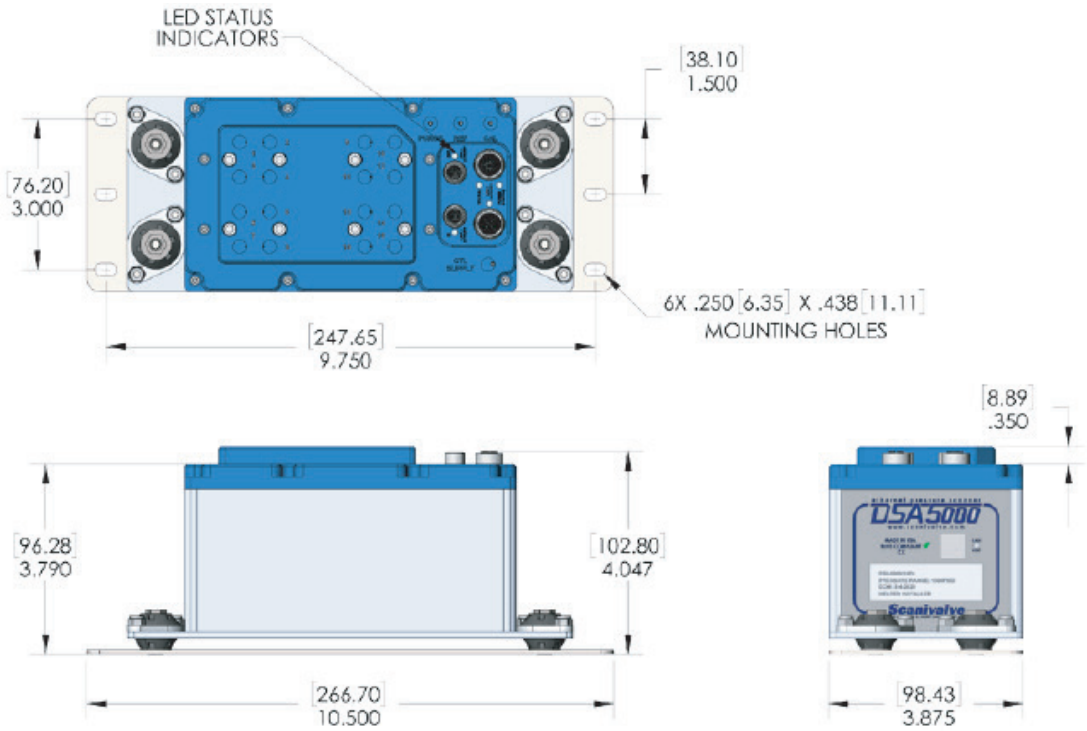

*Each DSA5000 module comes with all mating electrical connectors.
**Quick Disconnect (QD) Header and Shock Mount Kit are separate, individual options.

The information provided herein is to the best of our knowledge true and accurate, it is provided for guidance only. All specifications are subject to change without prior notification.

Althen – Your expert partner in Sensors & Controls | althensensors.com

Althen stands for pioneering measurement and custom sensor solutions. In addition we offer services such as calibration, design & engineering, training and renting of measurement equipment.

Germany / Austria / Switzerland info@althen.de
Benelux sales@althen.nl
France info@althensensors.fr
Sweden info@althensensors.se
USA / Canada info@althensensors.com
Other countries info@althensensors.com