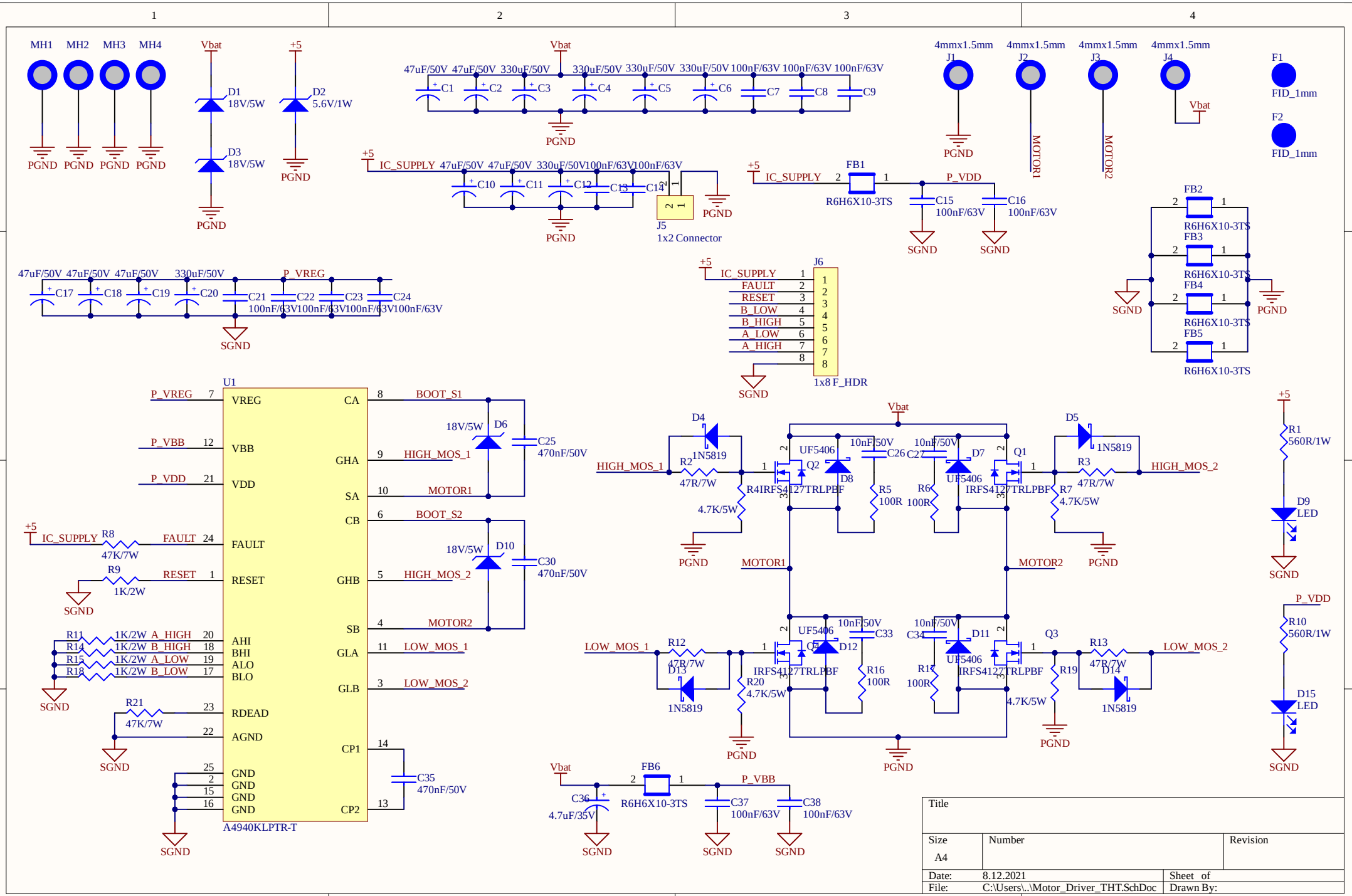
MH1 MH2 MH3 MH4
PGND PGND PGND PGND
Vbat
D1 18V/5W
D3 18V/5W
PGND
+5
D2 5.6V/1W
PGND
Vbat
47uF/50V 47uF/50V 330uF/50V 330uF/50V 330uF/50V 330uF/50V 100nF/63V 100nF/63V 100nF/63V
C1 C2 C3 C4 C5 C6 C7 C8 C9
PGND
+5
IC_SUPPLY 47uF/50V 47uF/50V 330uF/50V 100nF/63V 100nF/63V
C10 C11 C12 C13 C14
J5
1x2 Connector
PGND
PGND
4mmx1.5mm J1
4mmx1.5mm J2
4mmx1.5mm J3
4mmx1.5mm J4
PGND
MOTOR1
MOTOR2
Vbat
F1 FID_1mm
F2 FID_1mm
+5
IC_SUPPLY
FB1 R6H6X10-3TS
P_VDD
C15 100nF/63V
C16 100nF/63V
SGND SGND
FB2 R6H6X10-3TS
FB3 R6H6X10-3TS
FB4 R6H6X10-3TS
FB5 R6H6X10-3TS
SGND PGND
47uF/50V 47uF/50V 47uF/50V 330uF/50V
C17 C18 C19 C20
P_VREG
C21 C22 C23 C24
100nF/63V 100nF/63V 100nF/63V 100nF/63V
SGND
+5
IC_SUPPLY
FAULT
RESET
B_LOW
B_HIGH
A_LOW
A_HIGH
J6
1x8 F_HDR
SGND
U1
A4940KLPTR-T
P_VREG 7 VREG
P_VBB 12 VBB
P_VDD 21 VDD
+5 IC_SUPPLY R8 47K/7W FAULT 24 FAULT
R9 1K/2W RESET 1 RESET
SGND
R11 1K/2W A_HIGH 20 AHI
R14 1K/2W B_HIGH 18 BHI
R15 1K/2W A_LOW 19 ALO
R18 1K/2W B_LOW 17 BLO
SGND
R21 47K/7W 23 RDEAD
22 AGND
SGND
25 GND
2 GND
15 GND
16 GND
SGND
CA 8 BOOT_S1
GHA 9 HIGH_MOS_1
SA 10 MOTOR1
CB 6 BOOT_S2
GHB 5 HIGH_MOS_2
SB 4 MOTOR2
GLA 11 LOW_MOS_1
GLB 3 LOW_MOS_2
CP1 14
CP2 13
18V/5W D6
C25 470nF/50V
18V/5W D10
C30 470nF/50V
C35 470nF/50V
Vbat
D4 1N5819
R2 47R/7W
R4 4.7K/5W
HIGH_MOS_1
UF5406 Q2 D8
IRFS4127TRLPBF
10nF/50V C26
R5 100R
10nF/50V C27
D7 UF5406
R6 100R
Q1 IRFS4127TRLPBF
D5 1N5819
R3 47R/7W
R7 4.7K/5W
HIGH_MOS_2
PGND
MOTOR1
MOTOR2
PGND
LOW_MOS_1
R12 47R/7W
D13 1N5819
R20 4.7K/5W
UF5406 Q4 D12
IRFS4127TRLPBF
10nF/50V C33
R16 100R
10nF/50V C34
D11 UF5406
R17 100R
Q3 IRFS4127TRLPBF
R19 4.7K/5W
R13 47R/7W
D14 1N5819
LOW_MOS_2
PGND
PGND
PGND
Vbat
FB6 R6H6X10-3TS
P_VBB
C36 4.7uF/35V
C37 100nF/63V
C38 100nF/63V
SGND SGND SGND
+5
R1 560R/1W
D9 LED
SGND
P_VDD
R10 560R/1W
D15 LED
SGND
Title
Size A4
Number
Revision
Date: 8.12.2021
Sheet of
File: C:\Users\..\Motor_Driver_THT.SchDoc
Drawn By: