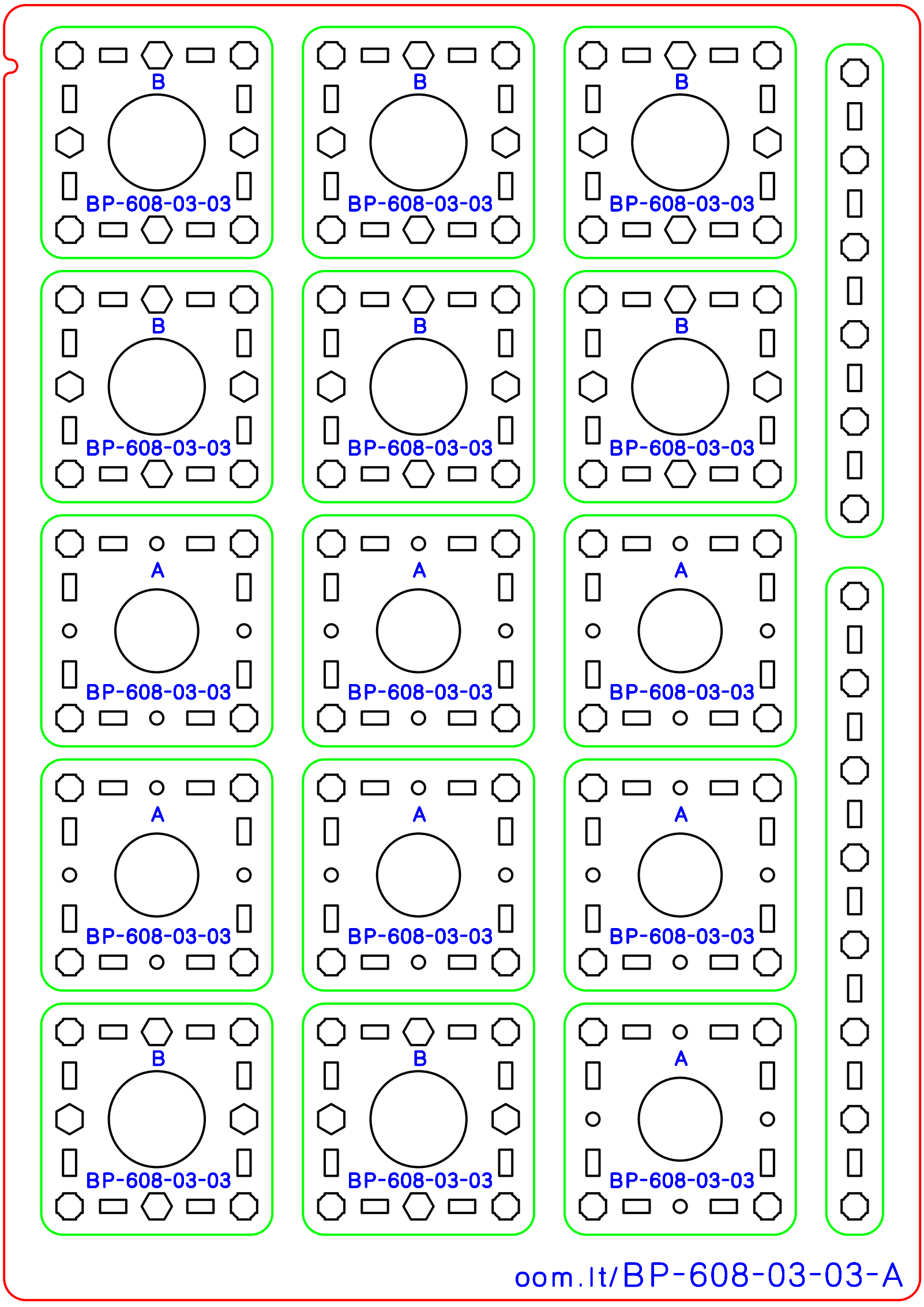
B
BP-608-03-03
B
BP-608-03-03
B
BP-608-03-03
B
BP-608-03-03
B
BP-608-03-03
B
BP-608-03-03
A
BP-608-03-03
A
BP-608-03-03
A
BP-608-03-03
A
BP-608-03-03
A
BP-608-03-03
A
BP-608-03-03
B
BP-608-03-03
B
BP-608-03-03
A
BP-608-03-03
oom.it/BP-608-03-03-A