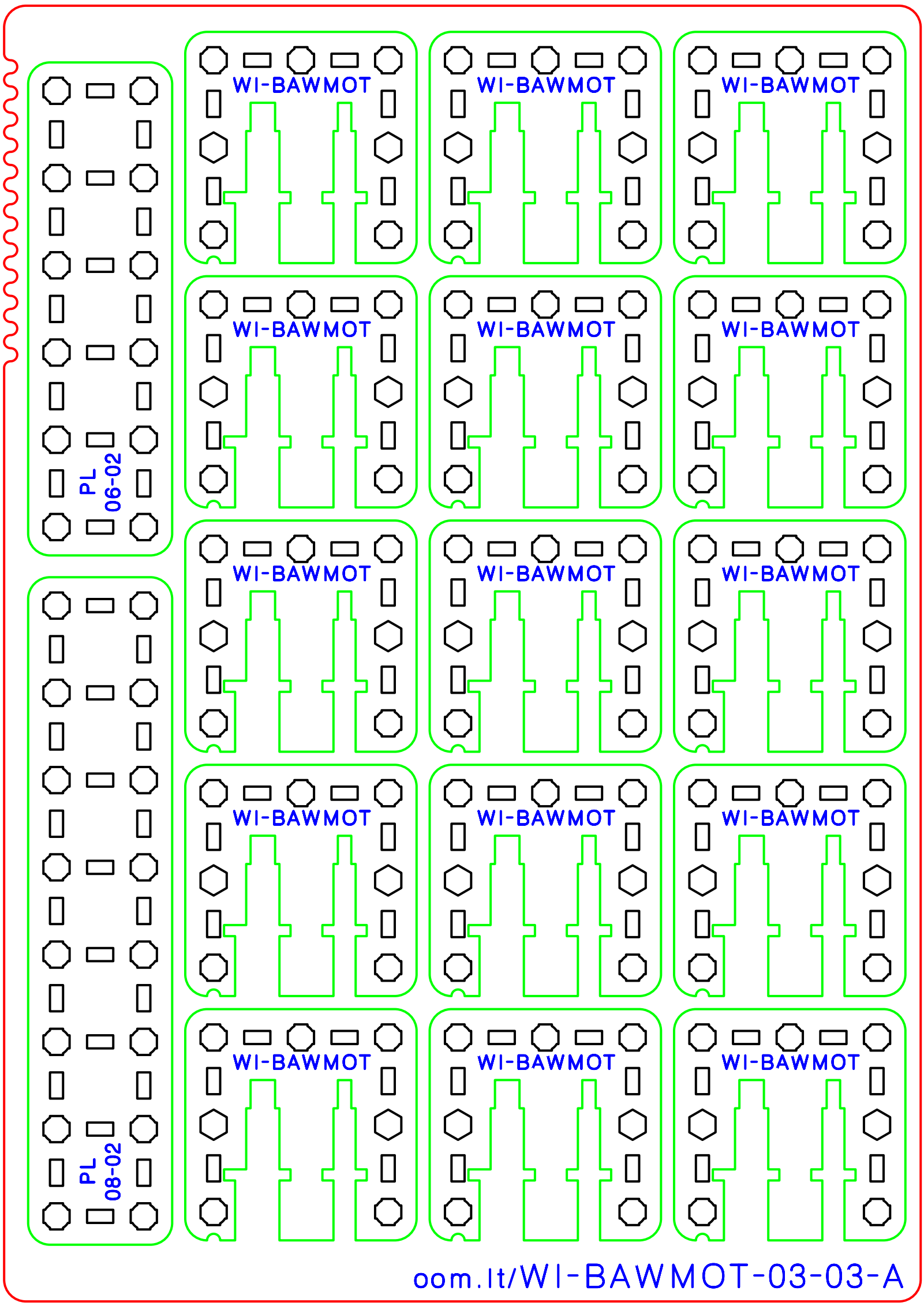
WI-BAWMOT
PL
06-02
PL
08-02
oom.lt/WI-BAWMOT-03-03-A