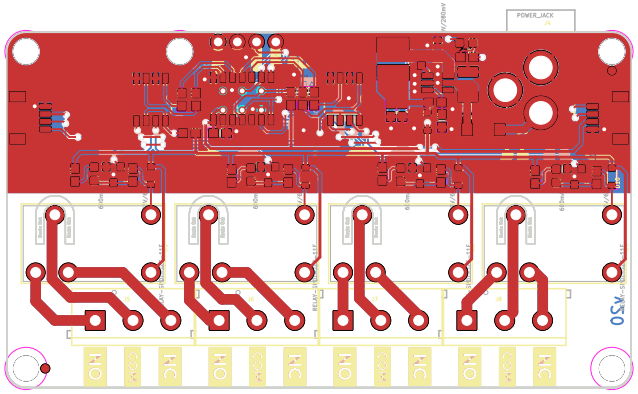

RELEASED UNDER THE CREATIVE COMMONS ATTRIBUTION SHARE-ALIKE 4.0 LICENSE
HTTPS://CREATIVECOMMONS.ORG/LICENSES/BY-SA/4.0/
DESIGNED BY: Elias Santistevan

Sheet:		
File: kicadBoard.kicad_pcb		
Title:		
Size: A4	Date:	**Rev:**
KiCad E.D.A. pcbnew (6.0.9)		Id: 1/1