REF**

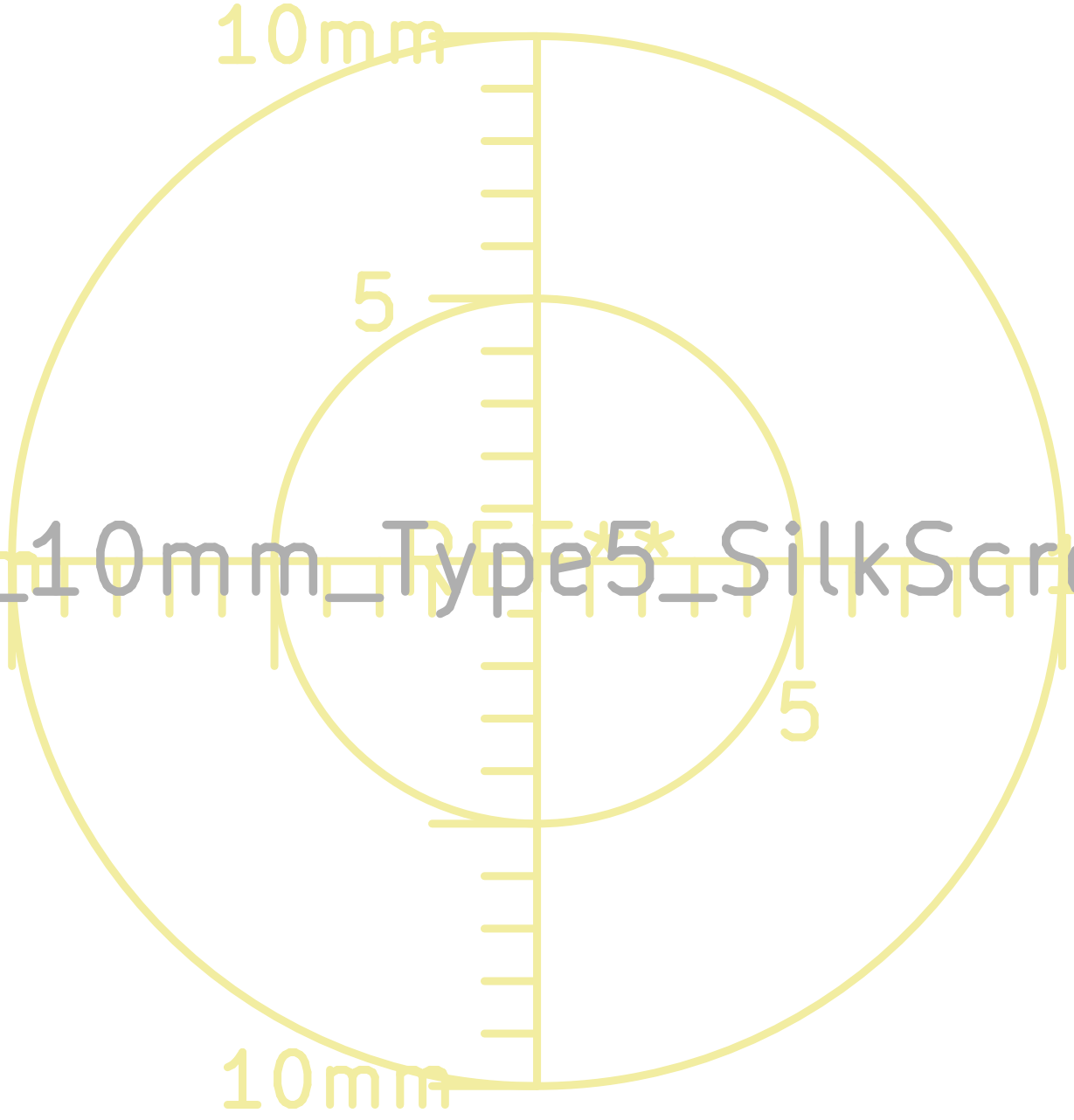

Gauge_10mm_Type5_SilkScreenTop