USB/Serial Bridge

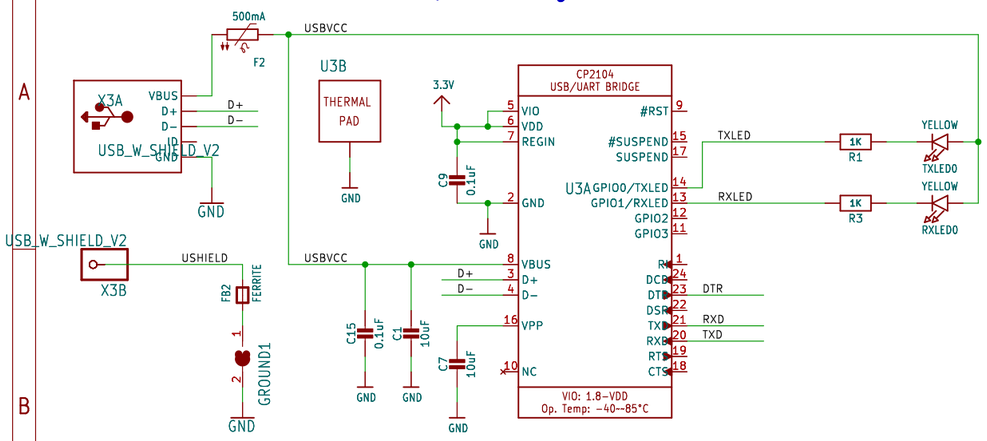

POWER SUPPLY: 5V

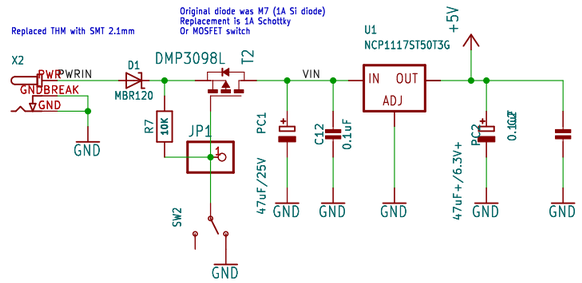

POWER SUPPLY: 3.3V

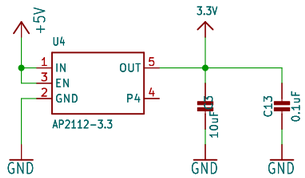

IO LEVEL SELECTION

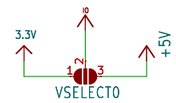

Default = 5V
Cut trace and solder to 3V3 to change

SCK LED

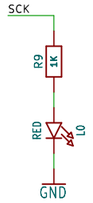

POWER LED

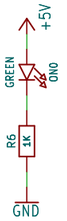

ATMEGA328 MCU

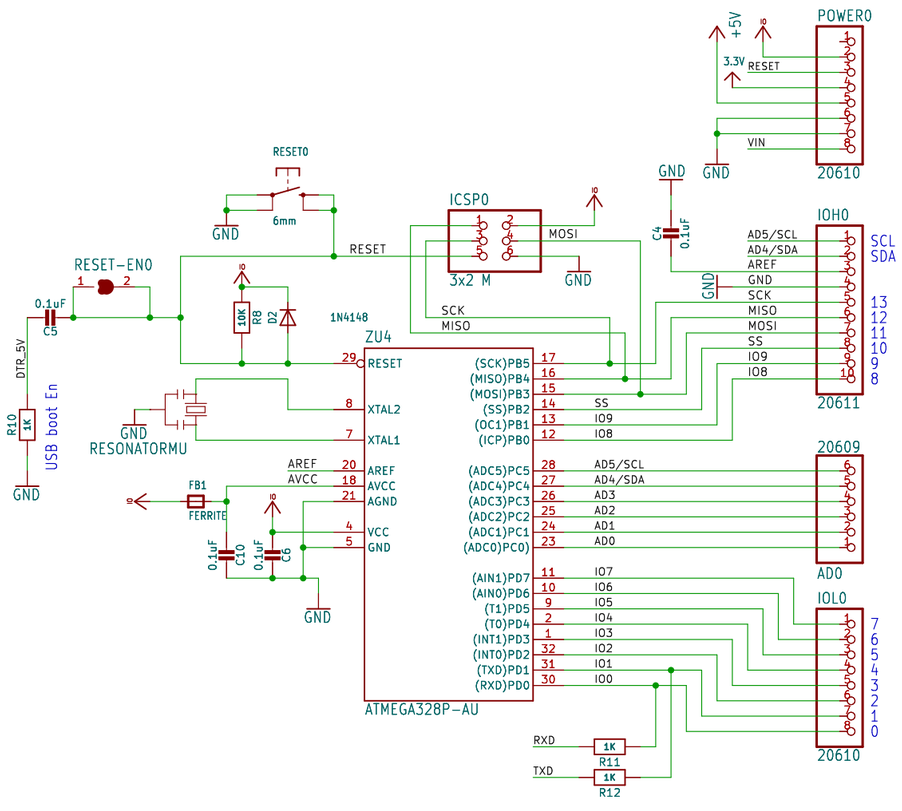

POWER SUPPLY SELECTION

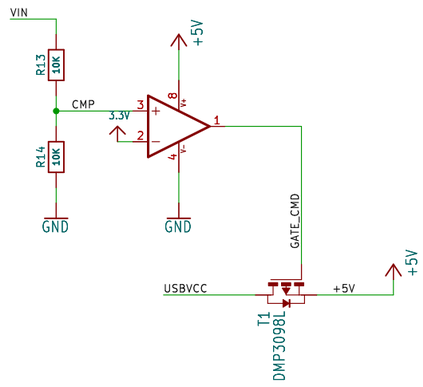

RESET LEVEL SHIFTING (3V-->5V)

The CP2104 chip outputs 3.3V logic, but with CMOS logic this is right at the limit of logic high on a 5V device (5V*0.7=3.5V). If the temperature rises, the required transition level will increase and may fail in some situations.

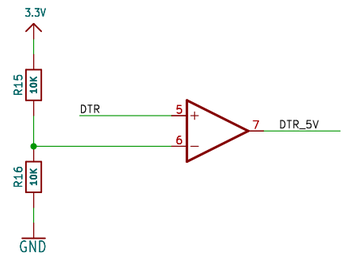

Lots of room for BLAH BLAH BLAH notes

Author:	Limor Fried & KTOWN
	${PROJECTNAME}
	${CURRENT_DATE}
Sheet: / File: working.kicad_sch	Sheet: ${#}/${##}
Title:	
Size: User	Date:
KiCad E.D.A. eeschema 7.0.2	Rev: Id: 1/1