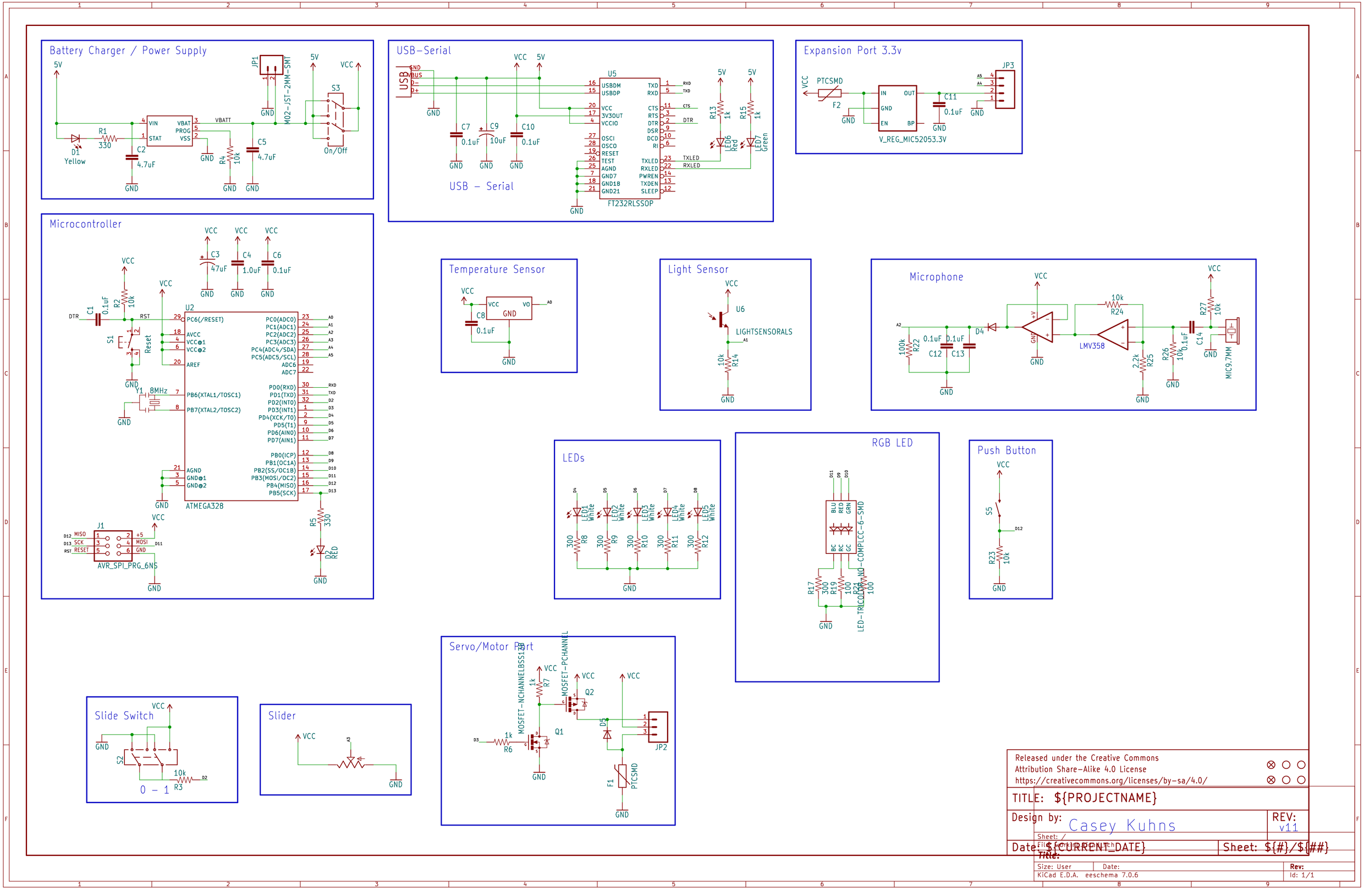
Battery Charger / Power Supply
USB-Serial
USB - Serial
FT232RLSSOP
Expansion Port 3.3v
V_REG_MIC52053.3V
Microcontroller
ATMEGA328
AVR_SPI_PRG_6NS
Temperature Sensor
Light Sensor
LIGHTSENSORALS
Microphone
LMV358
MIC9.7MM
LEDs
RGB LED
Push Button
Servo/Motor Port
Slide Switch
0 - 1
Slider
Released under the Creative Commons
Attribution Share-Alike 4.0 License
https://creativecommons.org/licenses/by-sa/4.0/
TITLE: ${PROJECTNAME}
Design by: Casey Kuhns
REV: v11
Date: ${CURRENT_DATE}
Sheet: ${#}/${##}
Size: User
Date:
Rev:
KiCad E.D.A. eeschema 7.0.6
Id: 1/1