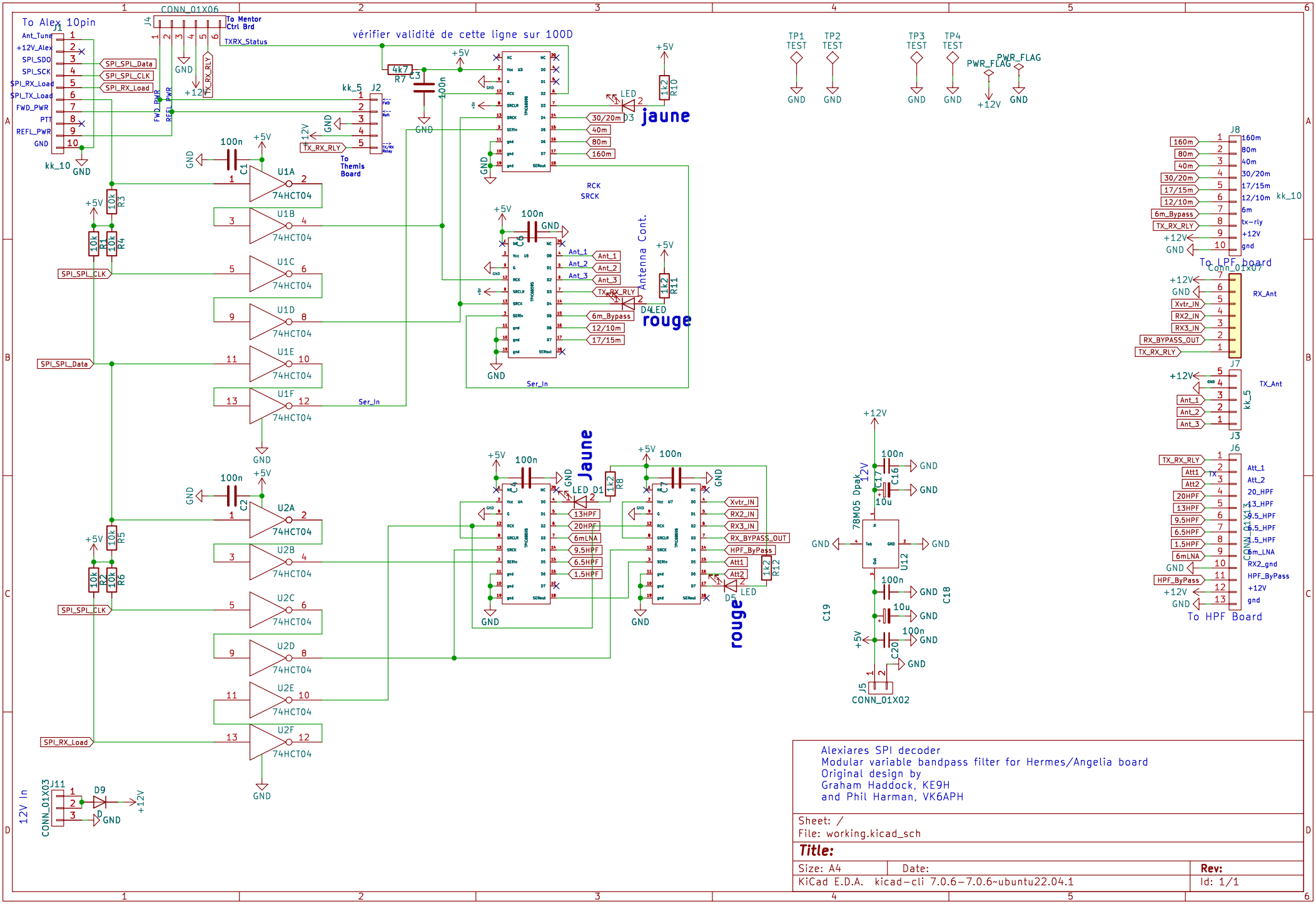

Alexiares SPI decoder
Modular variable bandpass filter for Hermes/Angelia board
Original design by
Graham Haddock, KE9H
and Phil Harman, VK6APH

Sheet: /
File: working.kicad_sch

Title:

Size: A4	Date:	Rev:
KiCad E.D.A. kicad-cli 7.0.6-7.0.6~ubuntu22.04.1		Id: 1/1