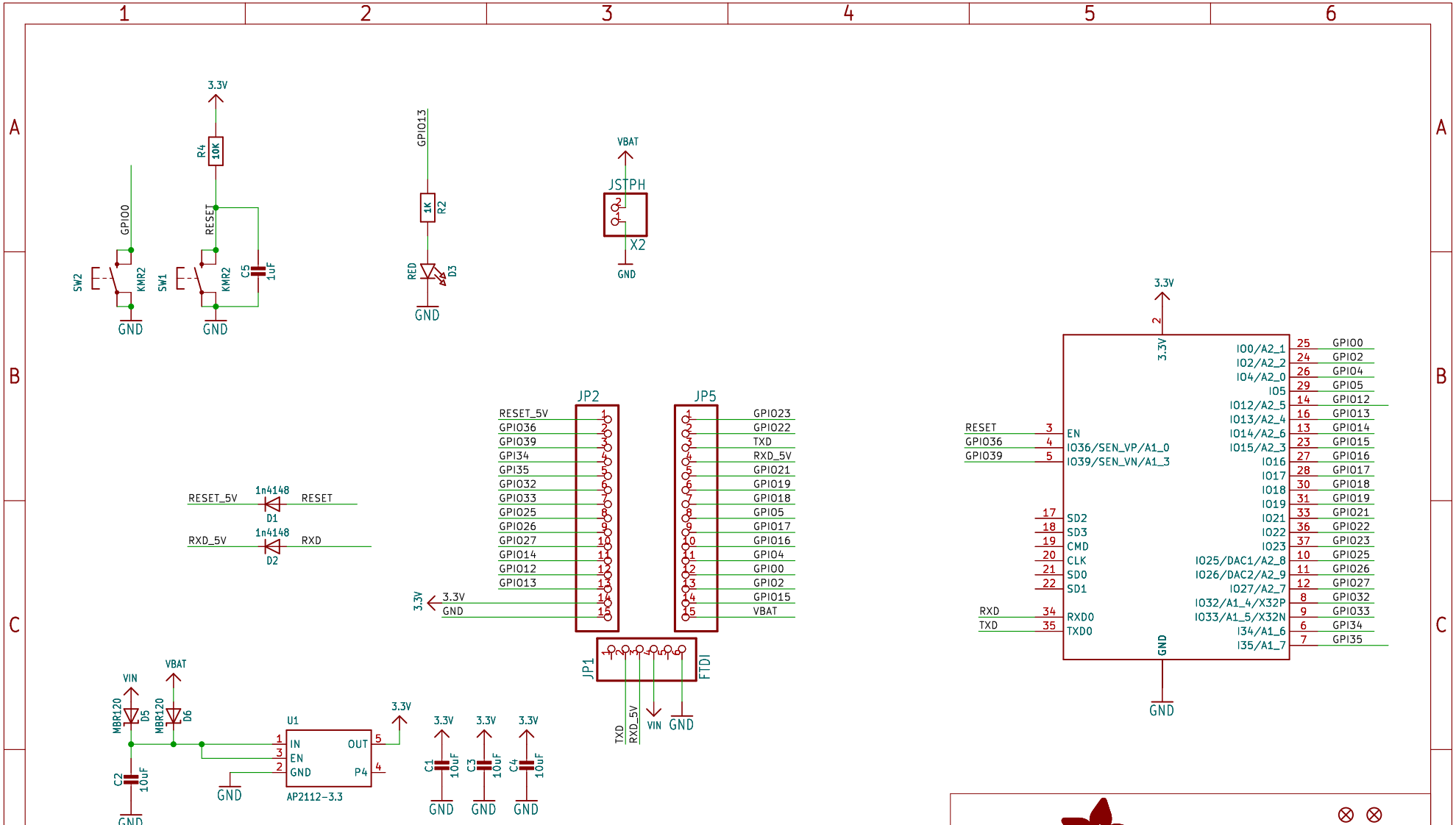

adafruit

${PROJECTNAME}

${CURRENT_DATE}

Sheet: ${#}/${##}

Drawing: ${AUTHOR}

Adafruit Industries

Sheet: /

File: working.kicad_sch

Title:

Size: User

Date:

Rev:

KiCad E.D.A. kicad-cli 7.0.6-7.0.6~ubuntu22.04.1

Id: 1/1