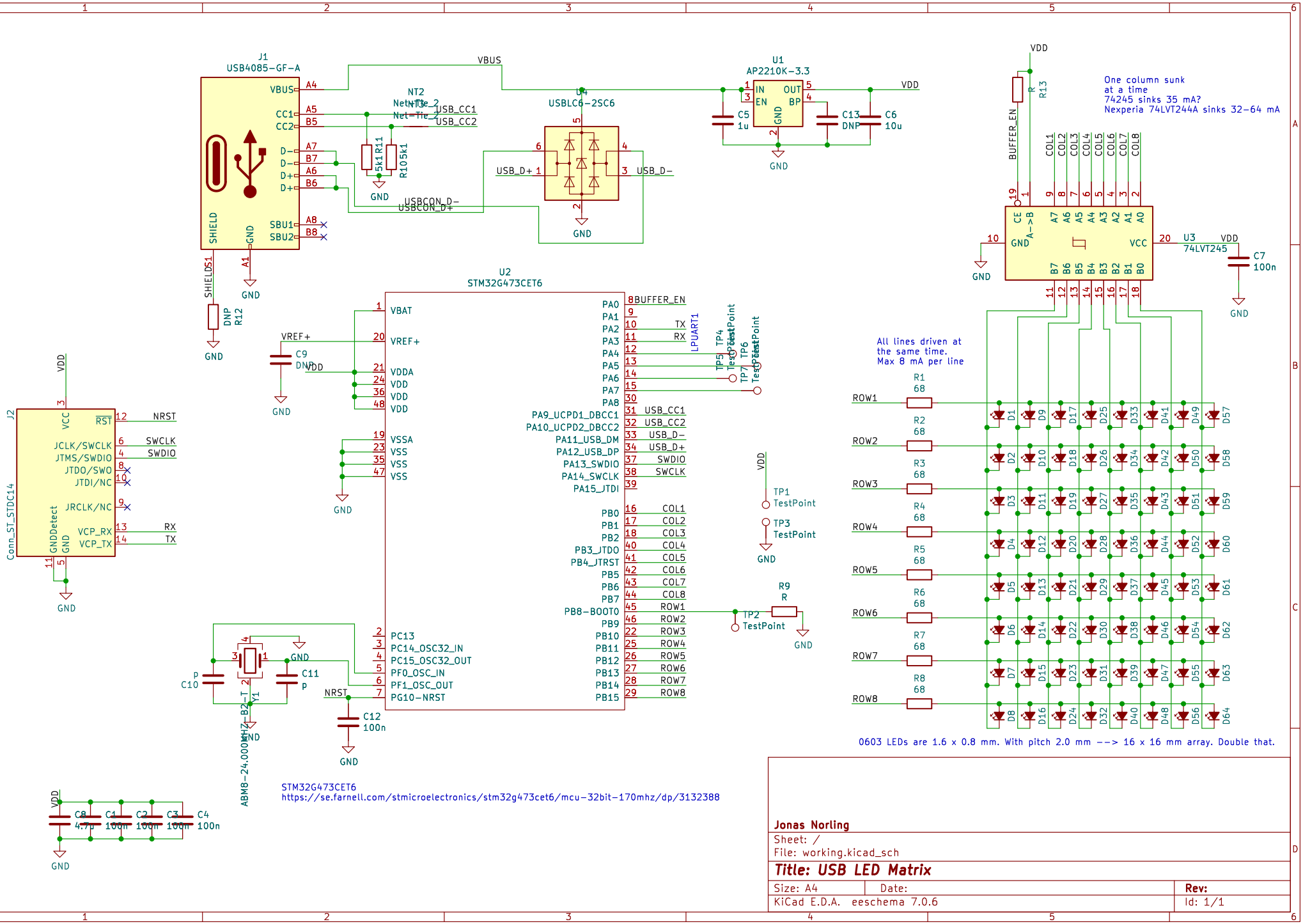
J1
USB4085-GF-A
VBUS
CC1
CC2
D-
D-
D+
D+
SBU1
SBU2
SHIELD
GND
NT2
Net-Tie_2
USB_CC1
USB_CC2
R11
5k1
R10
5k1
USBCON_D-
USBCON_D+
U4
USBLC6-2SC6
USB_D+
USB_D-
U1
AP2210K-3.3
IN
EN
OUT
BP
C5
1u
C13
DNP
C6
10u
VDD
R13
BUFFER_EN
One column sunk
at a time
74245 sinks 35 mA?
Nexperia 74LVT244A sinks 32-64 mA
COL1
COL2
COL3
COL4
COL5
COL6
COL7
COL8
CE
A->B
VCC
U3
74LVT245
C7
100n
SHIELDS1
DNP
R12
U2
STM32G473CET6
VBAT
VREF+
VDDA
VDD
VSSA
VSS
PA0
PA1
PA2
PA3
PA4
PA5
PA6
PA7
PA8
PA9_UCPD1_DBCC1
PA10_UCPD2_DBCC2
PA11_USB_DM
PA12_USB_DP
PA13_SWDIO
PA14_SWCLK
PA15_JTDI
PB0
PB1
PB2
PB3_JTDO
PB4_JTRST
PB5
PB6
PB7
PB8-BOOT0
PB9
PB10
PB11
PB12
PB13
PB14
PB15
PC13
PC14_OSC32_IN
PC15_OSC32_OUT
PF0_OSC_IN
PF1_OSC_OUT
PG10-NRST
BUFFER_EN
TX
RX
LPUART1
TP4
TP5
TP6
TP7
TestPoint
TP1
TP3
TP2
R9
R
C9
DNP
J2
Conn_ST_STDC14
VCC
RST
JCLK/SWCLK
JTMS/SWDIO
JTDO/SWO
JTDI/NC
JRCLK/NC
VCP_RX
VCP_TX
GNDDetect
NRST
SWCLK
SWDIO
RX
TX
C10
C11
C12
100n
Y1
ABM8-24.000MHZ-B2-T
C8
4.7u
C1
100n
C2
100n
C3
100n
C4
100n
All lines driven at
the same time.
Max 8 mA per line
R1
68
R2
68
R3
68
R4
68
R5
68
R6
68
R7
68
R8
68
ROW1
ROW2
ROW3
ROW4
ROW5
ROW6
ROW7
ROW8
0603 LEDs are 1.6 x 0.8 mm. With pitch 2.0 mm --> 16 x 16 mm array. Double that.
STM32G473CET6
https://se.farnell.com/stmicroelectronics/stm32g473cet6/mcu-32bit-170mhz/dp/3132388
Jonas Norling
Sheet: /
File: working.kicad_sch
Title: USB LED Matrix
Size: A4
Date:
Rev:
KiCad E.D.A. eeschema 7.0.6
Id: 1/1