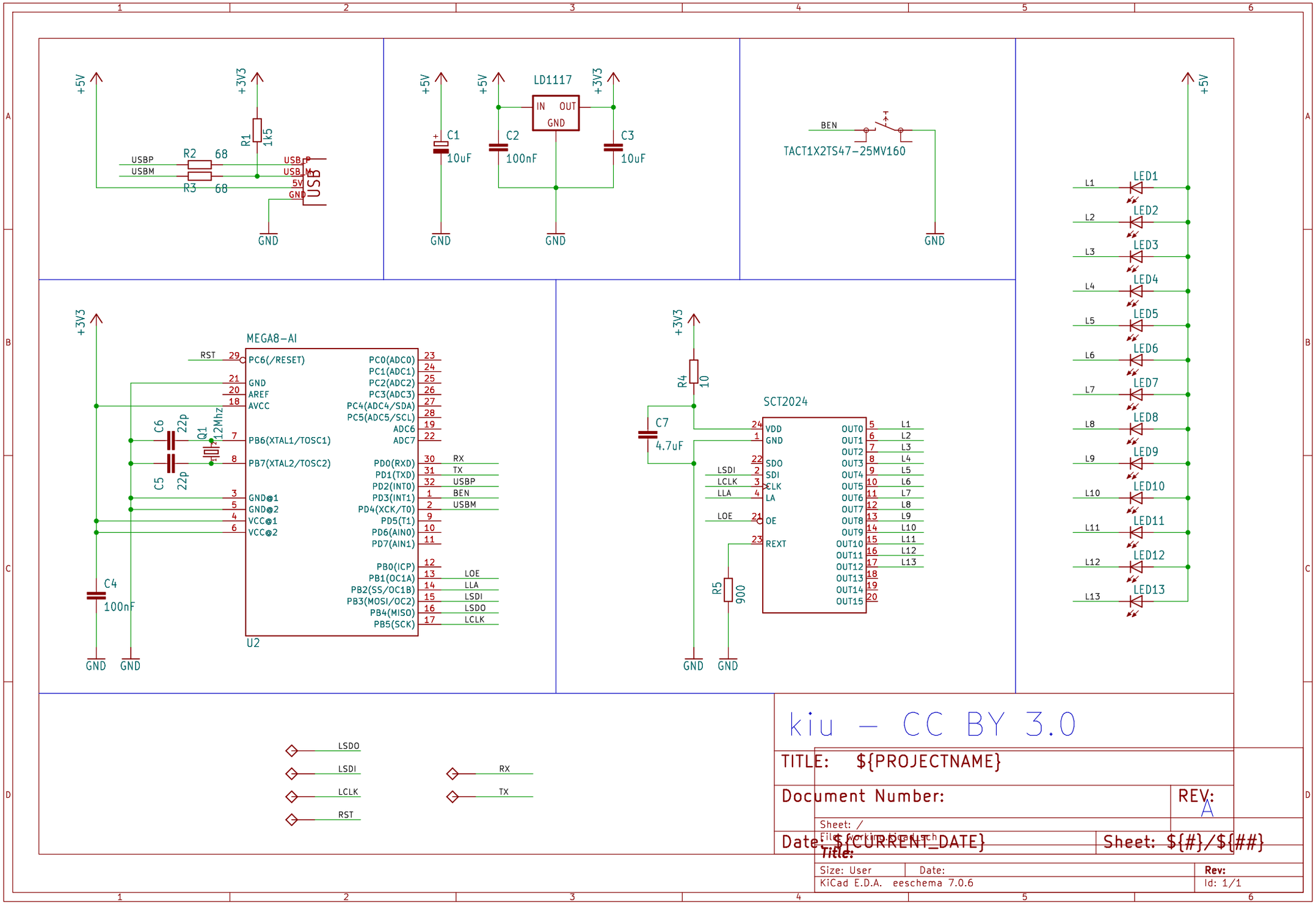

kiu – CC BY 3.0

TITLE: ${PROJECTNAME}

Document Number:

REV: A

Sheet: /

File: working.kicad_sch

Date: ${CURRENT_DATE}

Sheet: ${#}/${##}

Title:

Size: User

Date:

Rev:

KiCad E.D.A. eeschema 7.0.6

Id: 1/1