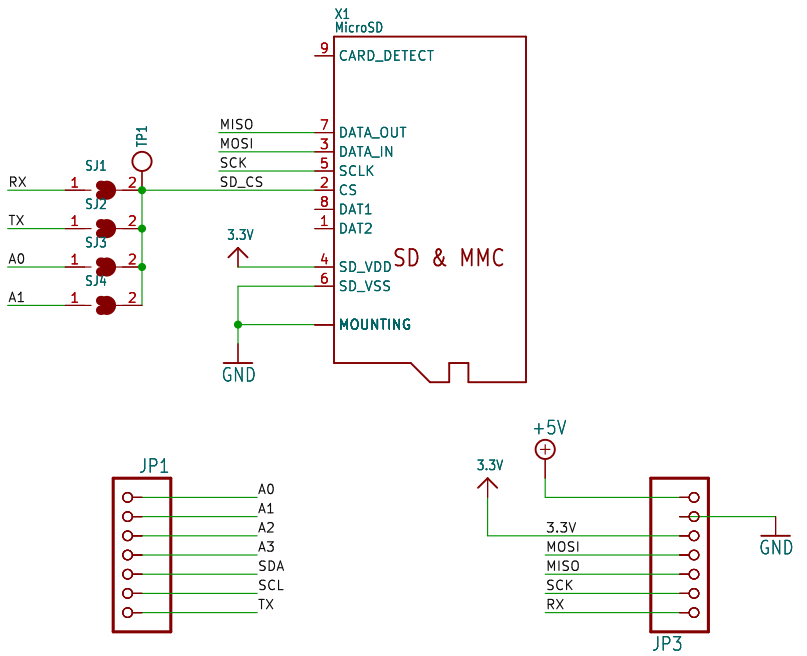

Adafruit QT Py
http://adafruit.com/products/4600

CC 2.5 BY-SA

TITLE: ${PROJECTNAME}

Document Number: ⊗ ⊗

REV:

Sheet: /

File: working.kicad_sch

Date: ${CURRENT_DATE}

Sheet: ${#}/${##}

Title:

Size: User

Date:

Rev:

KiCad E.D.A. kicad-cli 7.0.6-7.0.6~ubuntu22.04.1

Id: 1/1