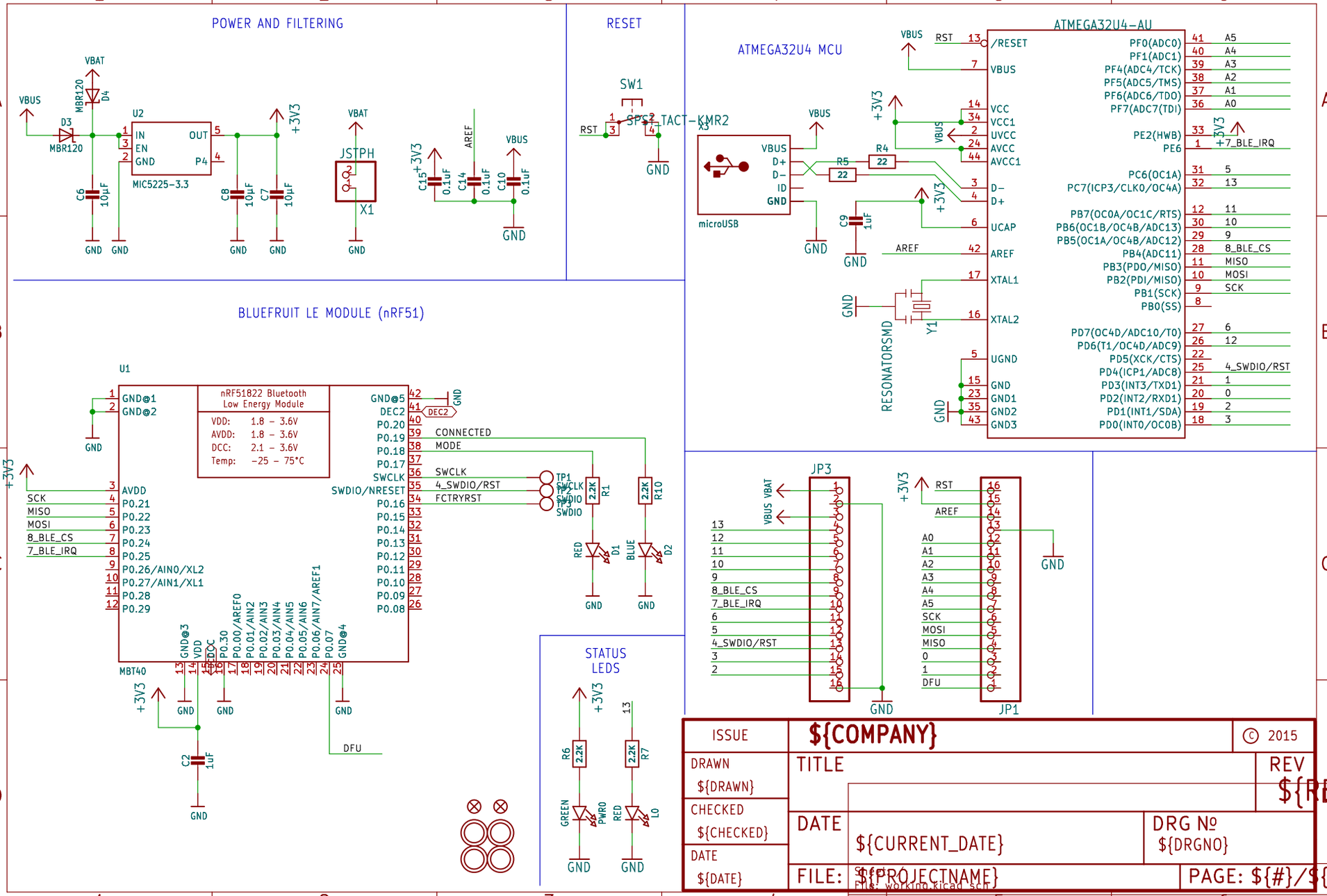
POWER AND FILTERING
RESET
ATMEGA32U4 MCU
ATMEGA32U4-AU
BLUEFRUIT LE MODULE (nRF51)
nRF51822 Bluetooth Low Energy Module
VDD: 1.8 – 3.6V
AVDD: 1.8 – 3.6V
DCC: 2.1 – 3.6V
Temp: -25 – 75°C
MIC5225-3.3
JSTPH
SW1
SPST_TACT-KMR2
microUSB
RESONATORSMD
STATUS LEDS
JP3
JP1
ISSUE
${COMPANY}
© 2015
DRAWN
${DRAWN}
CHECKED
${CHECKED}
DATE
${DATE}
TITLE
REV
${REV}
DATE
${CURRENT_DATE}
DRG №
${DRGNO}
FILE: ${PROJECTNAME}
PAGE: ${#}/${##}
Title:
Size: User
Date:
Rev:
KiCad E.D.A. kicad-cli 7.0.6-7.0.6~ubuntu22.04.1
Id: 1/1